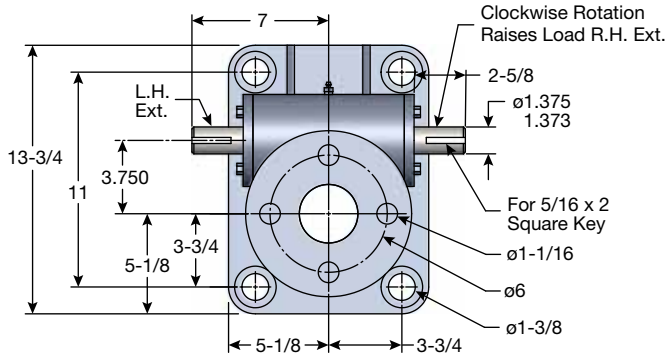

3" Diameter x .666 Lead Lifting Screws

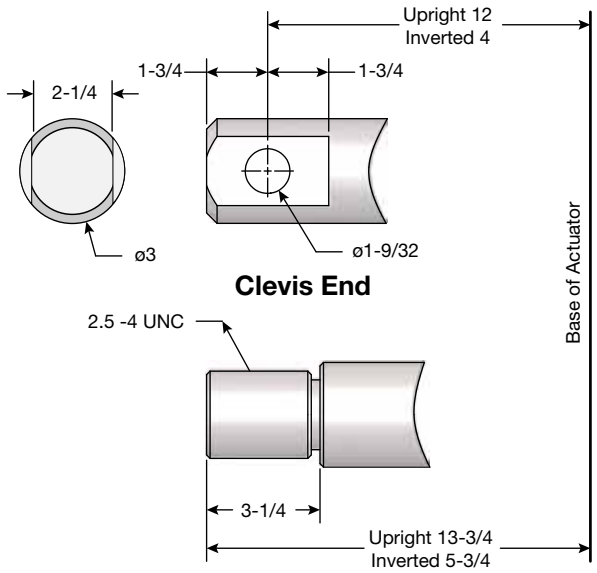

Clevis End

Threaded End

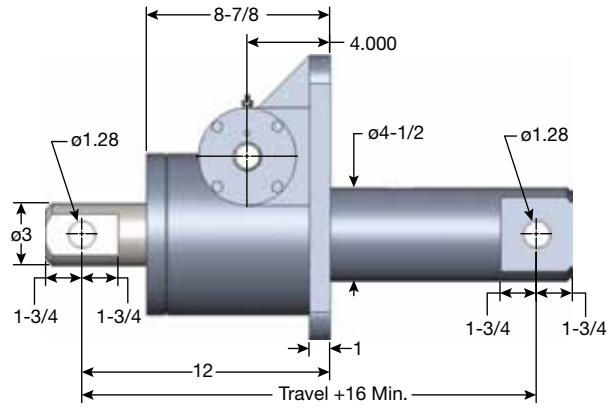

Double Clevis: CCM-9025

Maximum Allowable Raise in Compession 56" - Rating 37,000 Lbs.
Maximum Raise at Rated Load in Compression 47"

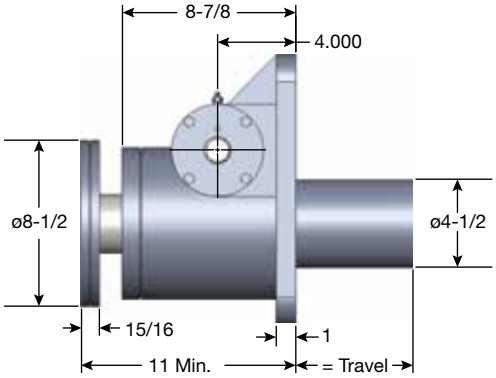

Upright: M-9025

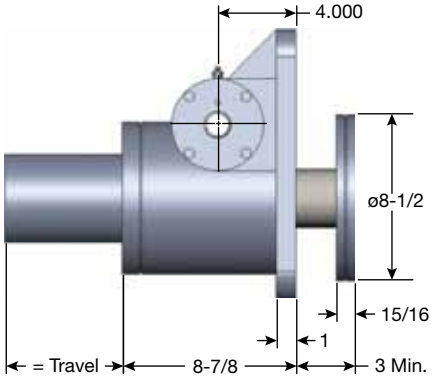

Inverted: M-9024

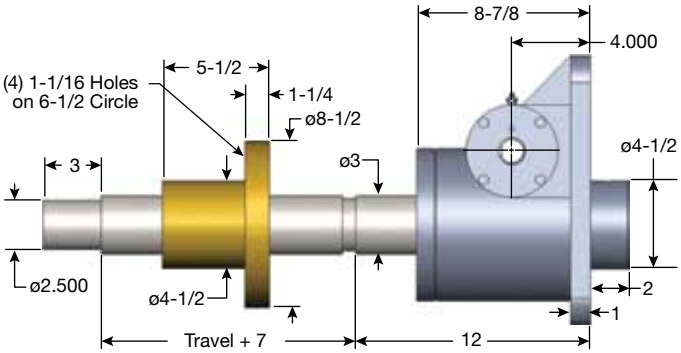

Upright Rotating: UM-9026

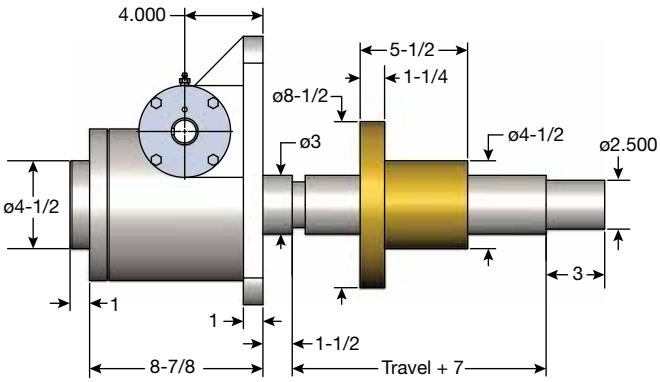

Inverted Rotating: DM-9026

Note: Lifting screw is not keyed. Top should be secured to a lifting member to prevent rotation. When a Bellows Boot is required, see pages 148-149. Dimensions are subject to change without notice.