MACHINE SCREW
ACTUATORS
3 TON CAPACITY

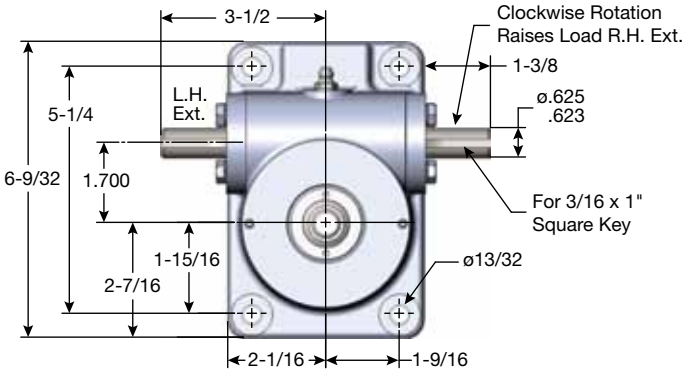

Top View: B9003 1" Diameter x .250"

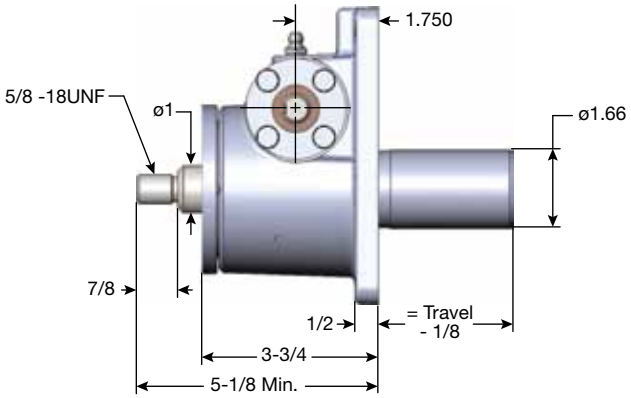

Upright: B9003T

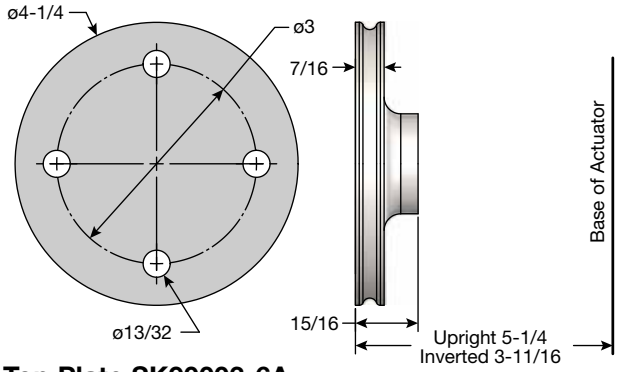

Top Plate SK90003-6A

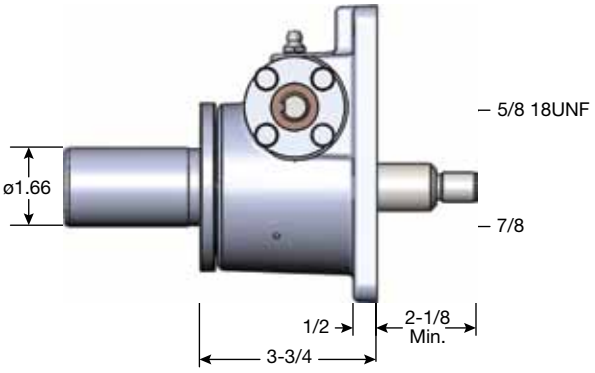

Inverted: B9003TV

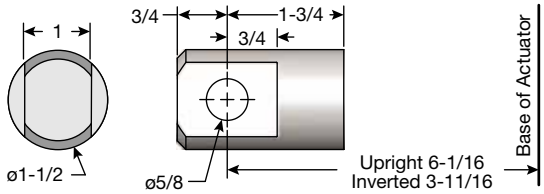

Clevis End SK90003-18A

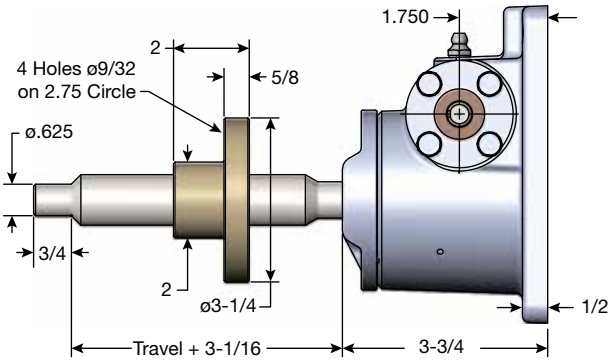

Upright Rotating: B9003U

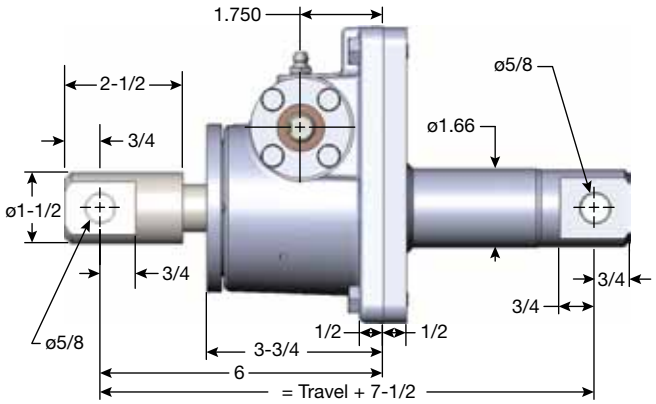

Double Clevis: CCM-9003

Maximum Allowable Raise in Compession 14" - Rating 3000 Lbs.
Maximum Raise at Rated Load in Compression 9"

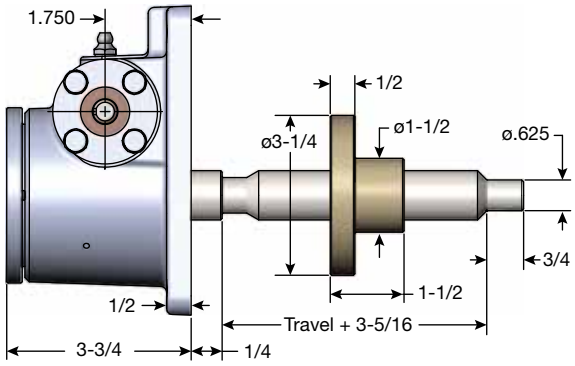

Inverted Rotating: B9003D

Note: Lifting screw is not keyed. Top should be secured to a lifting member to prevent rotation. When a Bellows Boot is required, see pages 148-149. Dimensions are subject to change without notice.