MACHINE SCREW
ACTUATORS
75 TON CAPACITY

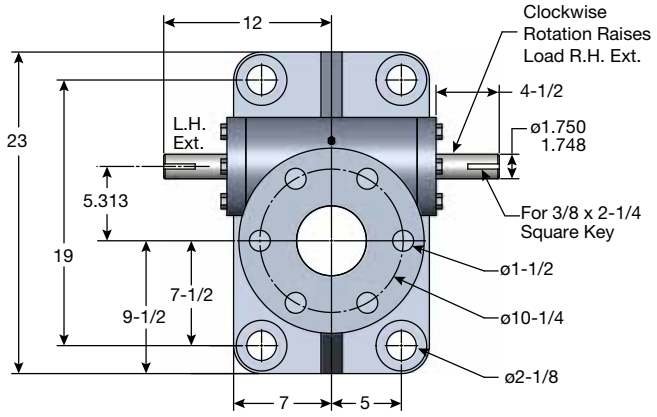

5" Diameter x .666 Lead Lifting Screws

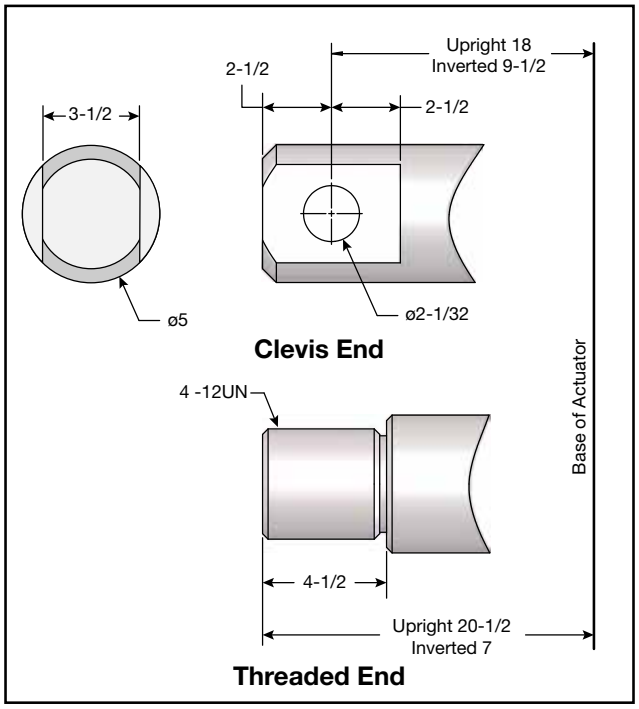

Note: Lifting screw is not keyed. Top should be secured to a lifting member to prevent rotation. When a Bellows Boot is required, see pages 148-149. Dimensions are subject to change without notice.

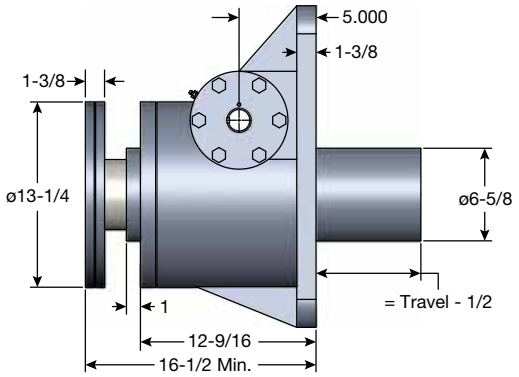

Upright: M-9075

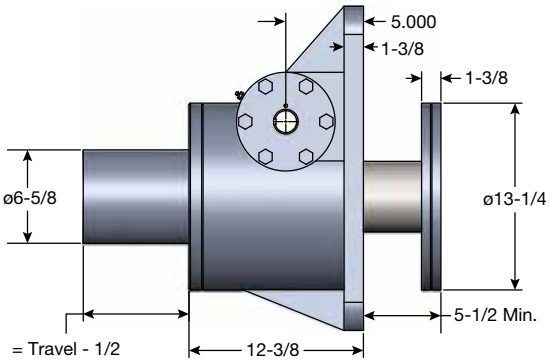

Inverted: M-9074

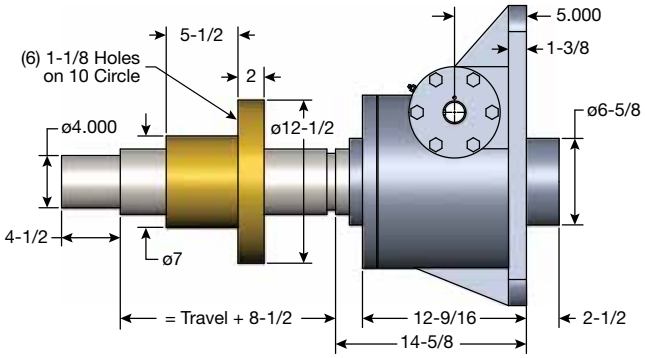

Upright Rotating: UM-9076

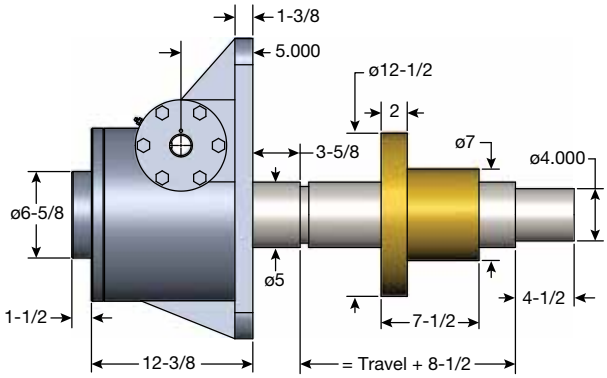

Inverted Rotating: DM-9076