www.kalatec.com.br

RUA SALTO, 99 - CAMPINAS - SP (19) 3045-4900

PRODUCT CATALOG

BRAKES, CLUTCHES, CLUTCH/BRAKES,
TENSION CONTROL CLUTCHES & BRAKES,
SERVOMOTOR BRAKES, TORQUE LIMITERS,
WEB TENSION & WEB AUXILIARY CONTROLS

TABLE OF CONTENTS

Product Number Index

Family of Products

Friction Clutches
- Friction clutches
- Metric friction clutches
- Dual plate clutches
- High capacity clutches
- Conveyor clutches
- Multi-disc clutches

Tension Control Clutches

Tooth Clutches
- Tooth Clutches
- Metric Tooth clutches

Overload Protection Devices
- Torque limiters
- Metric torque limiters
- Overload protection system

Friction Brakes
- Eclipse™ motor brakes
- Friction brakes

Friction Brakes(cont)
- Spring engaged brakes
- Caliper brakes
- Drum brakes
- Dual plate brakes
- High capacity brakes
- Metric brakes

Tension Control Brakes
- Tension control brakes

Clutch-Brakes
- NEMA “C” flange
- Modular NEMA “C” flange
- Thru-shaft mounted
- Metric clutch-brakes

Tensions Controls

Web Guiding Controls

Auxiliary Equipment

Clutch and Brake Controls

Repair Kits

Application Engineering Data

Function Examples

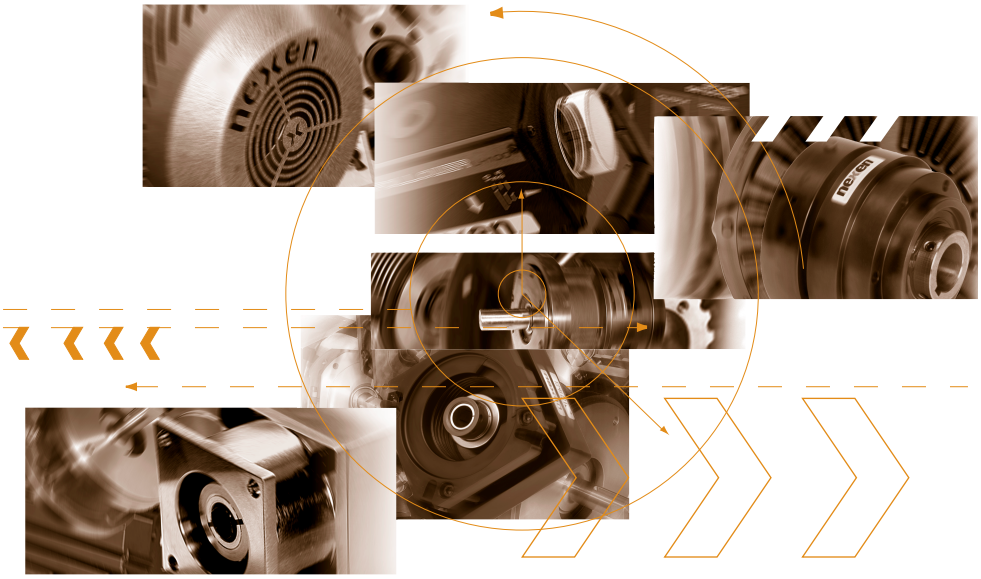

PRODUCT PAGE NUMBER INDEX

This Section Contains: . . . . . .Page

Product Numbers 1876 to 801638 4
Product Numbers 801639 to 812500 5
Product Numbers 812600 to 828400 6
Product Numbers 828500 to 846974 7
Product Numbers 847000 to 912300 8
Product Numbers 912302 to 927432 9
Product Numbers 927434 to 963600 10
Product Numbers 963700 to 965320 11

PRODUCT NUMBER INDEX

Product Number	Page Numbers
1876	344
1877	344
1878	344
1879	344
1880	125, 344
1881	344
1882	344
1883	344
1885	344
1887	344
2138	297
8365	297
9428	297
9429	297
9430	297
15596	303
17167	297
17168	297
30518	303
170012	345
170013	345
170014	345
170017	345
170020	345
170021	345
170023	345
170024	345
800000	32-33
800004	32-33
800100	32-33, 137
800107	32-33
800111	32-33, 137
800200	32
800300	32-33
800400	32-33
800500	32-33
800900	32
801200	137
801300	156-157
801305	156-157
801310	156-157
801321	156
801322	156
801323	156
801324	156
801331	156
801332	156
801333	156
801334	156
801335	156
801336	156
801337	156
801341	156
801342	156
801343	156
801344	156
801345	156
801350	357
801351	357
801352	357
801364	224
801365	224
801368	225
801400	274-275
801401	358
801402	358
801403	274-275
801405	358
801424	274-275, 280-281, 286-287
801425	274-275, 280-281, 286-287
801427	274-275, 280-281, 286-287
801428	358
801430	358
801431	226-227, 230-232, 236-237, 240-241
801432	288
801433	280-281, 288
801434	280-281, 286-287
801435	280-281, 286-287
801436	358
801440	230-231
801444	280-281
801445	280-281, 286-287
801447	358
801448	358
801451	286-287
801452	286-287
801454	280-281, 286-287
801455	280-281, 286-287
801458	282-283, 288-289
801460	282-285, 288-291
801463	284-285, 290-291
801464	280-281
801466	286-287
801467	286-287
801469	286-287
801470	286-287
801472	288-289
801473	288-289
801474	358
801475	288-289
801476	288-289
801477	358
801478	290-291
801479	290-291
801480	230-231
801481	290-291
801482	290-291
801484	280-281
801485	281-283
801487	358
801489	240-241
801493	240-241
801495	282-283
801496	284-285
801497	284-285
801498	280-281, 286-287
801499	280-281, 286-287
801500	116
801502	112-113, 118
801504	116
801506	112-113, 118
801508	353
801510	116
801512	112-113, 118
801516	112-113, 118
801518	355
801520	116
801522	112-113, 118, 377
801524	116, 237
801526	112-113, 118
801528	353
801530	116
801532	112-113, 118
801536	112-113, 118
801538	355
801540	116
801542	112-113, 118
801544	116
801546	112-113, 118
801548	355
801550	116
801552	112-113, 118
801554	116
801556	112-113, 118
801558	355
801560	116
801562	112-113, 118
801564	116
801566	112-113, 118
801568	355
801575	282-283, 288-289
801578	111
801579	111
801600	234-235
801601	284-285, 290-291
801602	284-285, 290-291
801603	228-229, 234-235 238-240
801604	358
801605	358
801606	234, 238
801608	282-283, 288-289
801610	276-277
801613	276-277
801616	278-279
801619	278-279
801622	234-235
801623	236-237, 381
801624	236-237
801625	238-239
801626	238-239
801627	276-277, 282-283, 288-289
801628	276-277, 282-283 288-289
801629	278-279, 284-285 290-291
801630	278-279, 284-285 290-291
801631	234
801632	276-277, 282-283, 289
801633	276-279, 282-285, 289-291
801634	278-279, 284-285, 290-291
801637	358
801638	358

Product Number	Page Numbers
801639	358
801640	358
801644	358
801645	358
801646	358
801647	358
801648	358
801649	358
801650	358
801651	358
801652	358
801653	358
801654	358
801655	234
801656	236
801657	236
801658	238
801659	238
801660	280-281
801661	358
801662	358
801663	280-281
801664	358
801666	282-283
801669	282-283
801672	284-285
801675	284-285
801677	232-233
801680	232-233
801705	226-227
801706	226-227
801709	228-229
801711	228-229
801731	234-235
801802	112
801808	355
801812	112
801900	42
802100	42
802300	42
802311	42
802500	34, 260, 264
802600	34, 260, 64
802700	34-35, 254 260-261, 264-265
802800	34
802810	34-35, 42 264-265
802820	34-35, 42
802830	34-35, 42
802840	34-35, 42
802850	34-35, 42 264-265
802855	34-35, 42 264-265
802864	34-35
802865	34-35
802870	32-33, 137
802880	354
802902	114-115, 118
802904	120-121
802906	114-115, 118
802908	355
802912	114-115, 118
802914	120-121
802916	114-115, 118
802918	355
802922	114-115, 118
802924	120-121
802926	114-115, 118
802928	355
802932	114-115, 118
802934	120-121
802936	114-115, 118
802938	355
802942	114-115, 118
802944	120-121
802946	114-115, 118
802948	355
803000	34
803100	34, 260, 264
803351	303
803352	303
803353	303
803354	303
803355	303
803356	303
803900	42
804000	42
804300	42
804513	42
804600	34, 266
804700	34, 266
804800	34, 266
804900	34-35, 258 260-261, 266-267
805000	34, 266
805100	34, 266
805200	34
805210	34-35, 42 266-267
805220	34-35, 42
805230	34-35, 42
805240	34-35, 42
805250	34-35, 42
805260	34-35, 42
805270	34-35, 42 266-267, 374
805275	34-35, 42 266-267
805280	354
805300	34
805400	34
805500	34
805600	36, 270
805700	152, 155
805800	152, 155
805900	152, 154
806000	152, 154
806100	42
806400	42
806600	42
806612	42
806700	36, 268
806800	36, 268
806900	36, 268
807000	36, 268
807100	36, 268
807200	36, 268
807300	36, 268
807400	36-37, 258, 262-263, 268-269
807500	36, 268
807600	36
807610	36-37, 42 268-269
807620	36-37, 42
807630	36-37, 42
807640	36-37, 42
807650	36-37, 42, 268-269 380
807655	36-37, 42, 268-269
807680	354
807700	36
807800	36
807900	36
808000	36
808100	36
808200	152, 154
808300	152, 154
808400	357
808471	357
808500	357
808600	42
808900	42
809100	42
809200	36, 270
809300	36, 270
809400	36, 270
809500	36, 270
809600	36, 270
809700	36-37, 262-263, 270-271
809900	36, 270
810000	36
810010	36-37, 42, 270-271
810020	36-37, 42
810030	36-37, 42
810040	36-37, 42
810050	36-37, 42, 270-271
810055	36-37, 42, 270-271
810080	354
810300	36
810400	36
810500	36
810600	36
810900	40-41
811100	40-41
811200	40
811300	40
811400	40
811500	40
811600	40
811700	40-41
811800	40
811900	40
812000	40

PRODUCT NUMBER INDEX

Product Number	Page Numbers
812500	152, 155
812600	152, 155
812700	357
812771	357
812800	357
817700	138-139, 142-143, 146-147, 192-195, 218-219
818300	138-139, 142-143, 146-147, 192-195, 218-219
818800	146
818830	194-195
818861	146-147
818862	146-147
818865	194-195
818866	194-195
818870	357
818910	356
818971	356
818972	356
818974	356-357
818975	356
818976	356
819000	142-143
819001	142-143
819003	142-143, 218
819004	142-143, 218
819200	138
819300	138
819400	138
819900	138-139 142-143, 146-147, 192-195, 218
820000	138
820300	146-147
820330	194-195
820361	146-147
820362	146-147
820365	194-195
820366	194-195
820370	357
820510	356
820571	356
820572	356
820574	356-357
820575	356
820576	356
820577	356
820600	142-143
820601	142-143
820604	142-143, 218
820605	142-143, 218
820800	72, 138
820800	72, 138
820900	72, 138
821000	72, 138
821100	72, 138
821200	72, 138
821400	138-139, 142-143, 146-147, 192-195, 218
821800	72, 138
821900	72, 138
822465	196-197
822466	196-197
822470	357
822494	146-147
822495	146-147
822496	146-147
822500	148-149
822510	144-145
822514	140-141
822515	140-141, 144-145, 148-149
822516	140-141, 144-145, 148-149
822517	140-141
822518	144-145
822519	140-141
822520	144-145
822523	141, 144-145
822525	140-141, 144-145, 148-149
822526	140-141,144- 145, 148-149
822530	196-197
822561	148-149
822562	148-149
822565	196-197
822566	196-197
822570	357
822700	72, 138
822710	148-149
822713	148-149
822714	148-149
822720	148-149
822723	148-149
822724	148-149
822800	72, 138
822900	72, 138
823000	72, 138
823100	72, 138
823200	72, 138
823400	138-139, 142-143, 146-147, 192-193, 196-197, 218
823800	72, 138
824200	142-143
824201	142-143
824202	142-143, 218
824203	142-143, 218
824300	144-145
824301	144-145
824305	144-145, 218
824306	144-145, 218
824700	72, 140
824800	72, 140
824900	72, 140
825000	72, 140
825100	72, 140
825200	72, 140
825300	72, 140
825500	140-141, 144-145, 148-149, 192-193, 196-197, 218
825800	72, 140
825900	72, 140
826000	254-255
826050	254-255
826051	254-255
826070	358
826300	138-139, 142-143, 146-147, 192-193 196-197, 218-219
826700	260-261, 375
826800	260-261
826900	260-261
827100	260-261
827111	260-261
827200	34, 260, 264
827250	225
827251	225, 232, 236
827260	225
827261	225, 232, 236
827270	225, 232, 236
827272	232-233
827280	225, 232, 236
827282	232-233
827320	150-151
827323	150-151
827340	150-151
827343	150-151
827344	150-151
827360	150-151
827380	150-151
827410	356
827471	356
827472	356
827474	356-357
827475	356
827476	356
827477	356
827510	356
827571	356
827572	356
827574	356-357
827575	356
827576	356
827577	356
827578	356
827579	356
827800	138-139
827801	138-139
827810	192-193
827811	192
827818	218
827819	218
827820	218
827821	218
827900	138-139
827901	138-139
827904	218
827905	218
827907	218
827908	218
827910	192-193
827911	192
828000	138-139
828001	138-139
828006	218
828007	218

Product Number	Page Numbers
828008	218
828010	192-193
828012	192
828023	218
828100	140-141
828101	140-141
828108	218
828109	218
828110	192-193
828111	192
828121	218
828122	218
828200	140-141, 144-145, 148-149. 192-193, 196-197, 218-219
828300	260-261
828400	260-261
828500	260-261
828600	260-261
828700	260-261
828800	260-261
828900	260-261
829000	260
829100	260
829200	260
830300	262-263
830400	262-263
830500	262-263
830600	262-263
830700	262-263
830800	262-263
830811	262-263
830900	262
831000	262
831100	262
831200	262
831300	262
832400	262-263
832500	262-263
832600	262-263
832700	262-263
832900	262-263
832913	262-263
833000	262
833100	262
833200	262
833300	262
833400	262
835000	160, 264-271
835030	160
835071	160
835111	73
835112	73
835113	73
835120	307
835121	73
835122	203
835123	71, 203
835124	71, 203
835125	71, 203
835127	71, 203
835128	71, 203
835129	203
835131	158-159
835132	158-159
835133	158-159
835134	307
835139	71, 73
835140	73
835141	73
835142	73
835143	73
835144	73
835145	73
835146	73
835147	73
835148	73
835150	72
835151	72
835152	72
835156	72
835157	72
835158	72
835165	203
835166	71
835168	71
835175	201
835200	162-163
835210	162-163
835220	164-165
835230	164-165
835271	356
835272	356
835273	356
835274	356
835275	356
835400	160, 264, 266, 268, 270
835401	205
835402	205
835403	205
835404	205
835405	205
835411	207
835412	207
835413	207
835414	207
835415	207
835416	207
835421	209
835422	209
835423	209
835424	209
835425	209
835426	209
835431	211
835432	211
835433	211
835434	211
835435	211
835436	211, 209, 211
835451	205. 207, 209, 211
835463	205, 207, 209, 211
835471	205, 207, 209, 211
835491	211
835492	211
835493	211
835494	211
835495	211
835496	211
835500	211
835540	213
835541	213
835542	213
835543	213
835544	213
835545	213
835550	213
835551	213
835552	213
835553	213
835554	213
835555	213
835560	213
835570	213
835580	213
835581	213
835600	356
835601	356
835602	356
835631	205, 207, 209, 211
835643	205, 207, 209, 211
835650	205
835651	205
835652	205
835653	205
835654	205
835655	205
835656	207
835657	207
835658	207
835659	207
835660	207
835661	207
835662	209
835663	209
835664	209
835665	209
835666	209
835667	209
835668	211
835669	211
835670	211
835671	211
835672	211
835673	211
837000	158-159
837100	158-159
837400	172-173
837450	170
837471	356
837472	356
837473	356
837500	172
837600	173
841600	176-177
842000	176-177

Product Number	Page Numbers
842100	176-177
842300	176-177
843200	176-177
843600	176-177, 180-181
843700	176-177
844000	176-177, 180-181
845100	180-181
845200	178-179
845300	178-181
845400	180-181
845500	178-179
845600	178-181
845700	180-181
846800	354, 356
846871	354, 356
846900	354
846971	354
846972	354
846974	354
847000	354
847071	354
847072	354, 358
847074	354
847100	354
847171	354
847172	354, 358
847174	354
847200	354
847271	354
847272	354
847274	354
847800	358
847900	358
848000	358
848100	358
848200	354
848271	354
848272	354
848273	354
853900	354
854000	307, 344, 375
855500	160, 266-267
855600	160, 268-269
855700	160, 268-269
855800	160, 270-271
855900	264-265
856000	266-267
856100	160
856200	160
856300	160
856700	136
856800	31, 136
857000	158
883000	152-153, 155
887000	330
887001	330
887002	330
887003	330
887005	330
887009	330
887010	330
887011	330
887012	330
887013	330
887014	330
887017	330
887111	330
887112	330
906700	80-81
906701	96-97
906703	98-99
906704	98
906800	80-81
906802	98-99
906900	80-81
906902	98-99
907000	80-81
907002	98-99
907003	98
907100	80-81
907101	96-97
907103	98-99
907104	98
907200	80-81
907202	98-99
907300	80-81
907302	98-99
909900	82-84
909902	100-101
909903	100
909912	82, 84
909980	64, 66-67, 82 84-86, 88. 90-92, 114, 118-119, 369
909981	64, 66-67, 82, 84-86, 88, 90-92 114, 118-119, 369
909984	66, 84, 90, 118
909985	66, 84, 90, 118
910000	82-84
910002	100-101
910003	100
910011	82, 84
910080	64, 66-67, 82, 84-86. 88. 90-92 114, 118-119, 369
910081	64, 66-67, 82, 84-86, 88, 90-92, 114, 118-119, 369
910084	66, 84, 90, 118
910085	66, 84, 90, 118
910091	96-97
910093	96-97
910094	96-97
910100	82-84
910102	100-101
910103	100
910112	82, 84
910180	64, 66-67, 82, 84-86, 88, 90-92, 369
910181	64, 66-67, 82, 84-86, 88, 90-92, 369
910184	66, 84, 90
910185	66, 84, 90
910200	82-84
910202	100-101
910203	100
910204	96-97
910211	82, 84
910280	64, 66-67, 82, 84-86, 88, 90-92, 114, 118-119, 369
910281	64, 66-67, 82, 84-86, 88, 90-92, 114 118-119, 369
910284	66, 84, 90
910285	66, 84, 90, 118
910300	82-84
910302	100-101
910303	100
910304	96-97
910311	82, 84
910380	64, 66-67, 82 84-86, 88, 90-92, 114, 118-119, 369
910381	64, 66-67, 82, 84-86, 88, 90-92, 114, 118-119, 369
910384	66, 84, 90, 118
910385	66, 84, 90, 118
910400	82-84
910402	100-101
910403	100
910404	96-97
910407	96-97
910480	64, 66-67, 82, 84-86, 88, 90-92, 114, 118-119, 369
910481	64, 66-67, 82, 84-86, 88, 90-92, 114, 118-119, 369
910484	66, 84, 90
910485	66, 84, 90, 118
910500	82-84
910503	100-101
910504	100
910580	64, 66-67, 82, 84-85, 88, 90-91, 118-119, 369
910581	64, 66-67, 82, 84-85, 88, 90-91, 118-119, 369
911300	82-83
911700	82-84
911702	100-101
911703	100
911780	82, 84-85, 88, 90-91, 118-119, 369
911781	82, 84-85, 88, 90-91, 118-119, 369
911784	84, 90, 118
911785	84, 90, 118
911889	297
911991	297
911995	297
911996	297
911998	297
911999	297
912000	297

Product Number	Page Numbers
912001	305
912004	305
912028	305
912035	305
912067	308
912068	308-309
912085	324-325
912100	88-90, 374
912102	104-105
912103	104
912112	88, 90
912119	324, 326
912123	308
912127	308-309, 310
912129	308, 309
912142	304-305, 310
912145	308
912200	88-90
912202	104-105
912203	104
912213	88, 90
912300	88-90
912302	104-105
912303	104
912312	88, 90
912400	88-90
912402	104-105
912403	104
912412	88, 90
912500	88-90
912502	104-105
912503	104
912512	88, 90
912601	339
912602	339
912609	297
912610	297
912621	324, 326
912626	324-325
912662	324, 325
912674	322-323
912675	316
912696	320
912700	88-90
912703	104-105
912705	96-97
912717	320
912719	320
912721	324, 325
912727	320
912730	331-332
912731	331-332
912732	331-332
912733	331-332
912734	331-332
912736	320
912737	320
912745	320
912747	320
912748	320
912749	320
912800	88-90
912802	104-105
912900	88-90
912902	104-105
913000	84, 86-87
913002	90, 92-93
913004	106-107
913005	102-103
913008	353
913009	353
913010	84, 86-87
913012	90, 92-93
913014	106-107
913015	102-103
913018	355
913019	355
913020	84, 86-87
913022	90, 92-93
913024	106-107
913025	102-103
913028	353
913029	353
913030	84, 86-87
913032	90, 92-93
913034	106-107
913038	355
913039	355
913040	84, 86-87
913042	90, 92-93
913044	106-107
913045	102-103
913048	355
913049	355
913050	84, 86-87
913052	90, 92-93
913054	106-107
913055	102-103
913058	355
913059	355
913071	338
913072	338
913100	82-83
913300	355
913400	355
913500	355
913600	355
913700	355
913800	355
913900	355
914000	355
916100	355
916200	355
916300	355
916400	355
916500	355
916600	355
916700	355
916710	355
916800	355
916900	355
917000	355
917100	355
917200	355
917300	355
917400	355
917500	355
919000	354
919100	354
919200	354
919300	354
919400	354
919500	354
919600	354
920400	64
920500	64
920600	64
920700	64
920800	64
920900	64
921000	64
921100	354
921300	354
921400	354
921500	354
921600	354
921700	354
923400	64-66
923412	64-66
923500	64-66
923511	64-66
923520	256-257
923550	62-63
923553	62-63
923554	62-63
923556	62-63
923557	62-63
923562	62-63
923563	62-63
923564	62-63
923565	62-63
923566	62-63
923567	62
923568	62-63
923569	62
923571	256-257
923576	62-63
923579	256-257
923582	62
923583	62
923584	256-257
923586	62-63
923587	62-63
923588	62-63
923589	256-257
923590	62-63
923591	256-257
923597	256-257
923600	64-66
923608	256-257
923609	256-257
923611	64-66
923623	256-257
923700	64-66
923712	64-66
923800	64-66
923812	64-66
923900	64-66
924000	64-66
927200	77
927203	217
927205	357

Product Number	Page Numbers
927206	217
927207	217
927208	357
927209	357
927210	217
927211	77
927240	357
927249	357
927250	357
927252	357
927407	215
927408	215
927409	215
927420	215
927421	215
927422	215
927423	215
927424	215
927425	215
927426	215
927427	215
927428	215
927429	215
927430	215
927431	215
927432	215
927434	357
927435	357
927521	357
927522	357
927523	215
927524	215
927525	215
927526	215
927527	215
927528	215
927529	215
927530	215
927531	215
927532	215
927533	215
927534	215
927535	215
927536	215
927537	215
927538	215
927539	357
927540	357
928000	246, 249
928100	246, 248
928400	226-227, 230-233, 236-237,240-241, 246, 248
928500	246, 249, 382
928600	246, 248, 382
928700	246, 249
928800	246, 249
929300	246
929600	226-227, 230-233, 236-237, 240-241, 246, 248
930000	358
930100	358
930200	358
930272	358
930276	358
930277	358
930278	358
930300	358
931000	246
932600	152, 154
932700	152, 154
932800	346
932900	152, 155
933000	152, 154
933100	152, 154
933200	152, 155
933500	168-169 373
933600	166-167
933800	346
933900	356
934000	356
934001	356
934200	174-175 375
934201	174-175
934202	174-175
934203	174-175
934204	174-175
934205	174-175
934206	174-175
934207	174-175
934219	175
934220	175
934221	175
934222	175
934223	175
934224	175
934225	175
934300	174-175
934400	174-175
935000	228-229, 234-235, 238-240, 247-248
935041	234, 238
935100	247-248 378
935200	247, 249, 378
935300	247, 249
936000	228-229, 234-235, 238-240, 247-248
936001	234-235
936041	234, 238
936100	247-248
936200	247, 249
936300	247, 249
936900	247
937000	247, 251, 253
937100	358
937200	358
937300	358
937400	358
937500	358
937600	358
937700	358
939101	342, 374-378, 380-383
939201	342, 374, 376-378, 380-383
939300	346, 375
939400	346, 374, 376-378, 381
940001	343, 374, 376-376, 380-383
940011	348
940012	350
940013	350
940014	350
940017	350
940018	349
940019	349
940020	351
940021	348
940412	346
940425	346
944400	347
944900	347
945100	347, 375
945125	347, 374, 376-378, 381
948801	344
948802	133, 150, 344
948803	344
948804	133, 150, 344
948805	133, 150
948806	133, 150
948807	133, 150
948808	133, 150
948809	133, 150
948810	133, 150
949001	344
949002	344, 374, 380-383
949003	344
949004	344
950050	38-39
950061	38
950070	354
950072	354
950150	38-39
950161	38
950171	354
950172	354
950373	354
950250	38-39
950261	38
950271	354
950272	354
950350	38-39
950361	38
950371	354
950372	354
950700	38-39
951203	120
951213	120
951222	121
951223	120
951232	121
951233	120
951242	121
951243	120
951302	120-121

Product Number	Page Numbers
951312	120-121
956700	46-47
960000	182-183
960100	182-183
960200	46-47
960600	46-47
960700	46
960800	354
960900	354
961000	182-183
961100	182-183
961200	48-49
961600	48-49
961700	48
961800	354
961900	354
962000	184-185
962100	184-185
962200	50-51
962600	50-51
962700	50
962800	354
962900	354
963000	184-185
963100	184-185
963200	52-53
963600	52-53
963700	52
963800	354
963900	354
964012	58, 60
964013	58, 60
964014	58, 60
964016	355
964017	357
964019	355
964020	357
964022	355
964023	357
964025	355
964026	357
964028	355, 357
964029	355, 357
964031	355, 357
964032	355, 357
964034	355, 357
964035	355, 357
964037	355, 357
964038	355, 357
964072	188-189
964073	188-189
964074	188-189
964075	188-189
964080	190-191
964081	190-191
964082	190-191
964083	190-191
964088	355
964091	355
964094	355
964097	355
964100	328
964101	328
964102	328
964103	328
964104	328
964110	328
964111	328
964112	328
964113	328
964114	328
964120	328
964121	328
964122	328
964123	328
964124	328
964130	328
964131	328
964132	328
964133	328
964134	328
964140	328
964141	328
964142	328
964143	328
964144	328
964149	54-55
964151	54-55
964152	54-55
964153	54-55
964154	54-55, 355
964155	54-55
964156	54-55
964157	54-55
964158	54-55
964159	54-55
964220	330
964221	330
964229	304
964230	304
964231	304, 310
964232	304, 310
964260	313
964350	296
964400	314, 318
964401	314, 318
964403	122-123
964404	122-123
964405	123
964406	123
964407	123
964408	123
964409	240-241
964410	240-241
964411	314, 318
964412	314, 318
964414	333
964415	333
964420	316
964508	111
964509	111, 310-313
964510	310
964511	310
964520	310
964521	310, 313
964522	310
964523	294
964531	310
964535	310
964537	294
964605	128
964606	128
964630	131
964631	131
964632	131
964633	131
964634	131
964635	131
964709	128
964710	128
964711	128
964712	128
964814	128
964815	129
964816	129
964817	129
964818	129
964819	128
964820	129
964821	129
964825	129
964826	129
964829	129
964830	129
964906	129
964907	129
964908	129
964909	129
964910	135
964911	135
964912	129
964913	129
964915	129
965000	130
965001	130
965005	130
965006	130
965100	130
965101	130
965200	130
965300	133
965301	135
965303	135
965310	133
965320	133

FAMILY OF PRODUCTS

Air Champ® Features and Benefits

For nearly one-half century, Nexen has been designing and manufacturing Clutches, Brakes and other products to support your motion control requirements. Each product is a result of years of innovative design and engineering, precise manufacturing and most importantly - understanding the requirements of motion control applications.

Whether your application requirements are simple or extensive, you will find our Air Champ® product family will service your motion control needs time and time again. You will find specific product features, benefits and specifications for every Air Champ® product in this catalog. However, there is a common thread of features and benefits throughout the Air Champ® product line.

Simple design, durability, efficiency and economy make Air Champ® products the best choice for your motion control applications.

Simple Design
Easy to understand • Easy to install

Air Activated
Increased efficiency and productivity • Inexpensive to operate

High Thermal Dissipation
Less torque fade • High cyclic rates • Long product life

Self Adjusting
Automatic torque maintenance • Worry-free operation

Low Maintenance
Long product life • Less down time • Easily serviced

Wide Selection
Application and Operational versatility • Mounting flexibility
Versatile product characteristics • Imperial & Metric designs

Ready to Ship
Readily available stock • Quick service

In accordance with Nexen's established policy of constant product improvement, the specifications contained in this document are subject to change without notice. Technical data listed in this document are based on the latest information available at the time of printing and are also subject to change without notice. For current information, please consult: www.nexengroup.com

NEXEN FAMILY OF PRODUCTS

This Section Contains: . . . . .Page

"AIR CHAMP"® FAMILY OF PRODUCTS

Friction Clutches 14
Tooth Clutches 14-15
Multiple Disc Clutches 15
Dual Plate Clutches & Brakes 16
High Capacity Clutches & Brakes 16
Overload Protection Devices 17
Flexible Couplings 17
Friction Brakes 18
Caliper Brakes 18
Drum Brakes 18
Spring Engaged Brakes 19
Thru-Shaft Mount Clutch-Brakes 19
Clutch-Disc Caliper Brakes 20
NEMA "C" Flange Clutch-Brakes 20
Modular System for NEMA "C" Flange Clutch-Brakes 21

This Section Contains: . . . . .Page

WEB PRODUCTS APPLICATION GUIDE

Web Products Application Guide 22
Web Control Products, Everything you need 23
Tension Control Systems 24
Web Tension Systems 25
Tension Control Brakes and Clutches . .25
Tension Meters and Amplifiers 26
Web Guiding Systems 26
Web Guide Sensors and Controllers . . .27
Auxiliary Products 27

Color Codes:

Clutches, Brakes, & Clutch/Brakes:
Indicates not rotating in mode:

Indicates rotating in mode:

Power input through shaft, unless noted.

Drum Brake & Caliper Brakes:
Parts that cause clamping action:

Disc:

Nexen manufactures and markets over twenty different types of clutches, brakes and clutch/brakes for both standard and metric applications–with many model sizes of each. Nexen also provides many accessories and controls to fit your needs. All are of the highest quality, simply designed, well engineered and ruggedly built. Nexen has a standard clutch or brake to solve every motion control need you can imagine.

The illustrations of the "Air Champ®" Family of Products on the following pages are intended to show a representation of the product line and to express only their basic function using typical cross sections. Please refer to specific product pages for application,specification and product information. Designs shown are subject to change without notice.

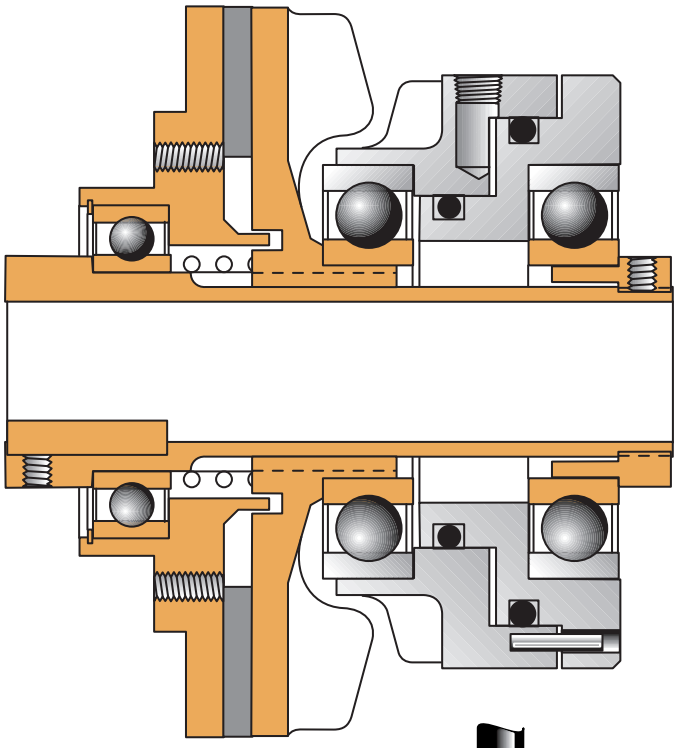

ENGAGED

Friction Clutches

Single-disc, self-adjusting Clutches mount on a driving or driven shaft. They cover transmitted horsepower ratings from fractional to 25 hp, torque ratings to 5000 In Lb with thermal capacities to 2.5 thermal horsepower and maximum operating speeds to 3600 rpm. Most are available in Sheave, Pilot or Coupling Mount versions. 9 Standard Models, 5 Metric Models address these product functions:

- Controlled Acceleration
- Inching/Jogging
- Rapid Cycling/Indexing
- Positioning
- Reversing/Multiple Speed
- Tension Control
- Overload Protection
- Disconnect
- Torque Limiting

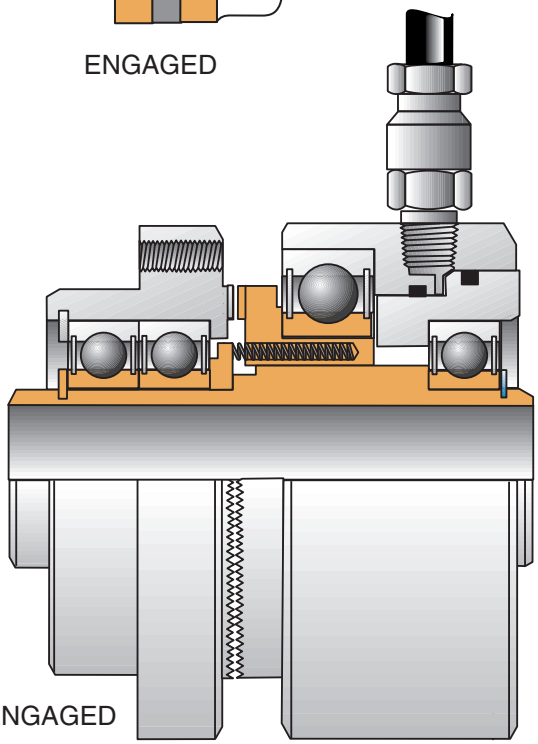

DISENGAGED

Tooth Clutches

Available in a variety of Single or Multiple Position Models, as well as a Sprocket Tooth design, there are 40 Standard and 35 Metric Models in all. Most can be used with a Single or Double Flex Coupling Assembly for in-line coupling applications.

Sprocket Tooth Clutches (5HS) are ideal for in-line, zoned conveyor applications, as well as other applications requiring bi-directional movement. They cover torque ratings up to 3,140 In Lb, and operational speeds up to 4000 rpm in 3 different Bore sizes. Choose between Single strand or Integral double/single sprocket mount designs. There are 3 Standard Models.

Multiple Position Clutches are available in either an Open (5H, 5HP) or Enclosed (5HP-E) design, as well as Flange (5H) or Pilot Mount (5HP, 5HP-E) options. They cover torque ratings up to 55,000 In Lb, and operational speeds up to 4000 rpm in 15 different Bore sizes. The Open-Flange Mount design is available in 7 Standard and 7 Metric Models; the Open-Pilot Mount design is available in 10 Standard and 8 Metric Models; the Enclosed-Pilot Mount design is available in 6 Standard Models and 6 Metric Models.

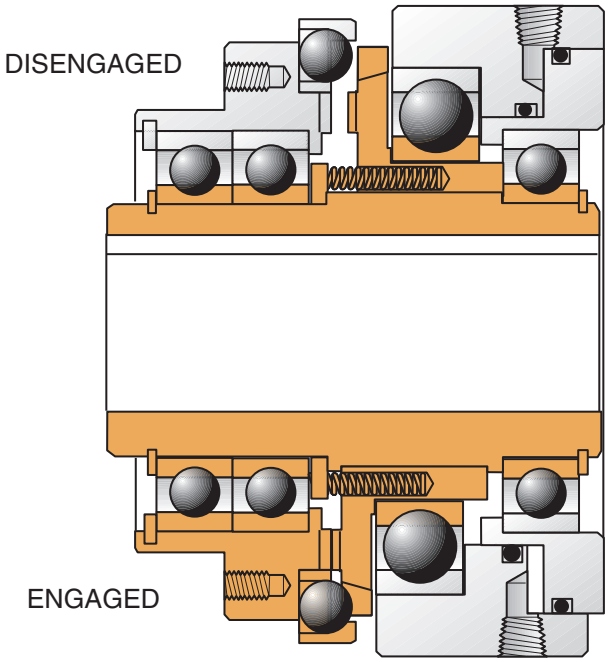

Tooth Clutches cont.

Single Position Clutches are available in either an Open (5H-SP) or Enclosed (5HP-SP-E) Pilot Mount design. They cover torque ratings up to 32,000 In Lb, and operational speeds up to 3700 rpm in 13 different Bore sizes. The Open design is available in 8 Standard and 8 Metric Models; the Enclosed design is available in 6 Standard Models and 6 Metric Models.

Tooth Clutches address these types of functions:

- Positioning
- Reversing/Multiple Speed
- Disconnect
- Positive Drive

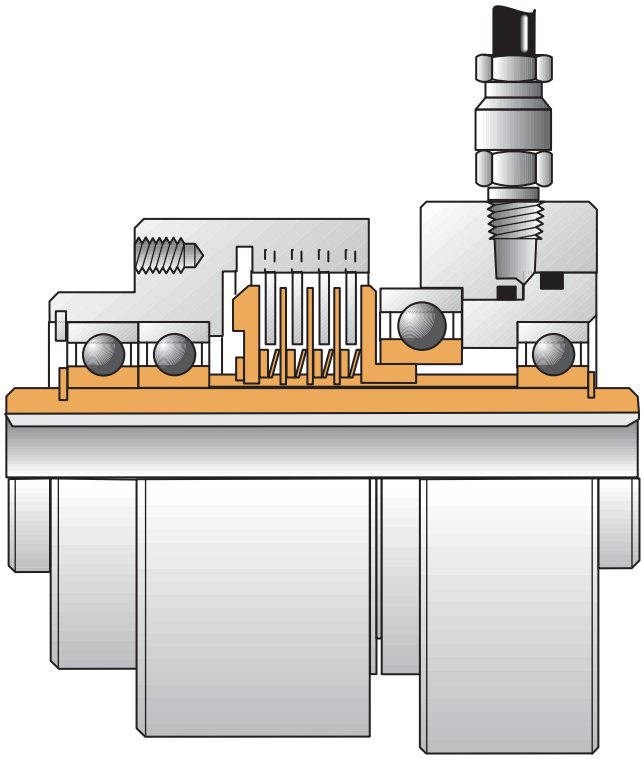

Multiple Disc Clutches

Multiple-Disc Clutches feature either 3 or 4 friction discs and facings positioned side-by-side. Static air pressure squeezes them together–the result is a small package for high torque applications. Torque capacities range from 750 to 10,000 In Lb, with operational speeds ranging from 700 to 1800 rpm in 12 different Bore sizes. Single or Double Flex Clutch Couplings can be added for in-line coupling applications. 7 Standard Models provide 12 different Bore sizes. Multiple-Disc Clutches address these functions:

- High Torque
- Small Package

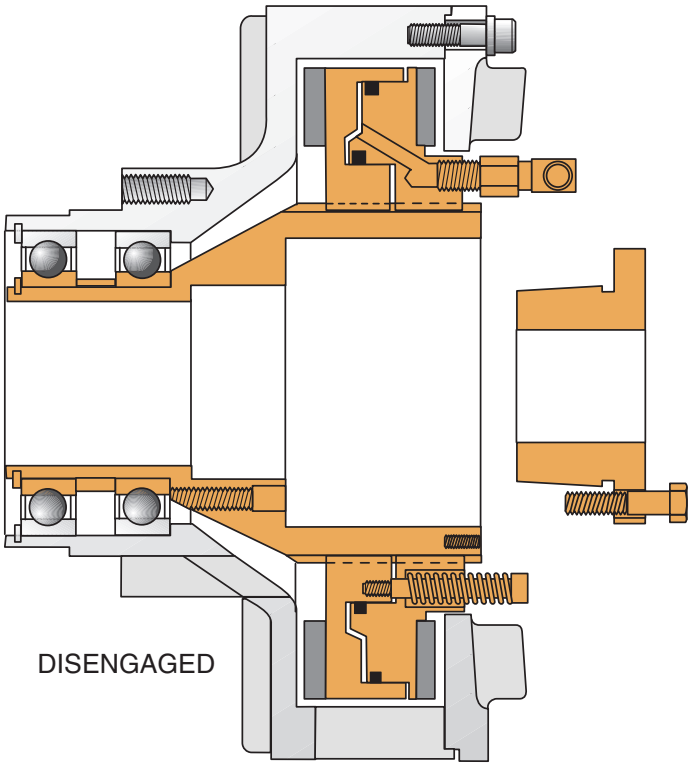

Dual Plate Clutches & Brakes

Dual Plate Clutches and Brakes each come in 4 Standard Models, whose modular design makes custom design easy and less expensive. For applications requiring up to 36,000 In Lb of torque, speeds up to 2200 rpm, thermal horsepower values up to 9.0, motor horsepower ratings from 5 hp to 150 hp. Clutches are designed for either shaft-end mounting or thru-shaft mounting. Brakes can either mount rigidly or non-rigidly. As many as 8 Bore sizes per Clutch Model, 7 Bore sizes per Brake Model with further customization possible. Sheave Mount options are also available for Clutches. Dual Plate Clutches are perfect for these functions:

- Controlled Acceleration
- Inching/Jogging
- Rapid Cycling/Indexing
- Positioning
- Reversing/Multiple Speed
- Tension Control
- Overload Protection
- Torque Limiting

Dual Plate Brakes address these functions:

- Controlled Deceleration
- Stopping/Holding

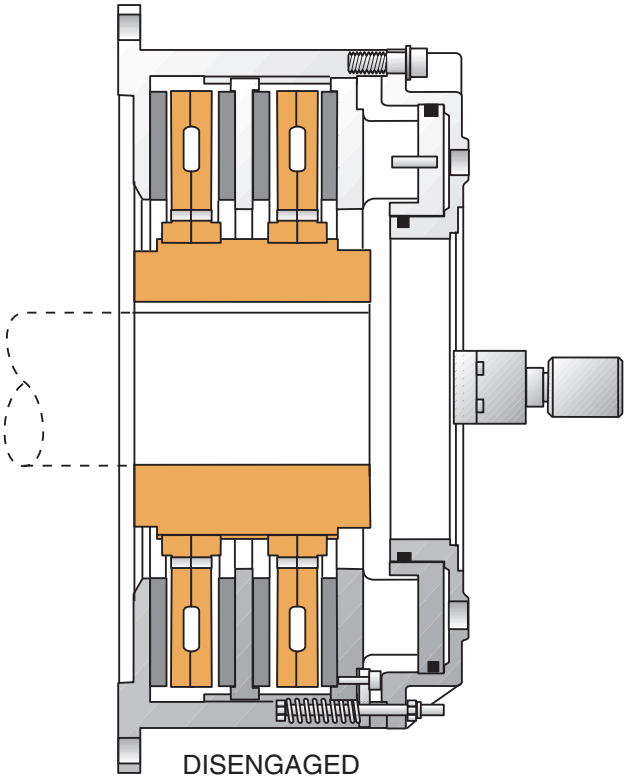

High Capacity Clutches & Brakes

16 Standard Models of air-actuated Clutch & Brake Elements are designed for heavy duty industrial applications that require high torque and low inertia. Used as either Clutches or Brakes, these elements are available in disc sizes from 11.50 to 25 inches. Torque capacities for these elements range from 12,000 to 300,000 In Lb, with speeds up to 2200 rpm and thermal horsepower values up to 14.7. Elements are available in two styles: Dual Faced Models, having single disc assemblies; and Quad Faced Models, having double disc assemblies. Each style is available in an S Model (standard coefficient friction lining), and an H Model (high coefficient friction lining). Bore sizes range from 1to 6.50 inches. High Capacity Clutches address these functions:

- Controlled Acceleration
- Inching/Jogging
- Rapid Cycling/Indexing
- Positioning
- Reversing/Multiple Speed

High Capacity Brakes address these functions:

- Stopping/Holding

Overload Protection Devices

Torque Limiters are pneumatic overload devices designed to instantly disengage at a pre-set torque level. The torque output is easily changed by adjusting the air pressure setting. The Single Position design assures re-engagement of the drive, from a complete stop, in the same position every time, thus providing exact timing of both components. A limit Switch Assembly senses electrical problems and interrupts power prior to damage occurring. Torque limiters are available in either Open or Enclosed designs in two mounting styles–Set Collar and Set Screw. Single or Double Flex Coupling Adapters can be added for vibration and shock protection, and in-line coupling applications. Air Pressure Control Systems are available in 2 styles to provide remote adjustment of torque settings. There are 30 Standard Models and 9 Metric Models to choose from, each with a wide range of Bore sizes and operating specifications. Torque Limiters address these functions:

- Positioning
- Overload Protection
- Disconnect
- Positive Drive

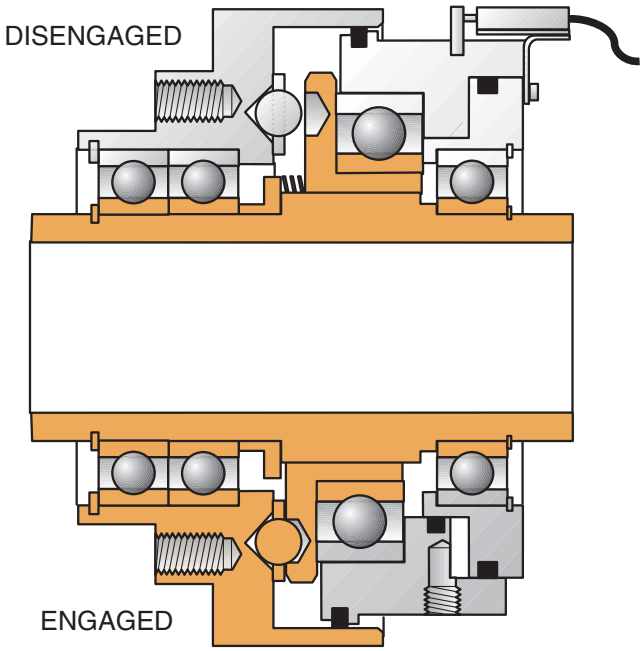

Flexible Couplings

These Flexible Couplings attach to a Tooth Clutch, Multi-Disc Clutch or Torque Limiter for non-thru shaft applications. Available in Single or Double Flex designs–8 Standard models each for Tooth Clutches, 7 Standard Models each for Multi-Disc Clutches and Torque Limiters. Their composite material construction is corrosion resistant and requires no lubrication or cleaning. you will find information on these industry leading products in the catalog section for each applicable Clutch or Torque Limiter. Flexible Couplings provide these benefits:

- High Misalignment Capability
- Multiple Shaft Synchronization/Long Line Shaft Capability
- Torsional Stiffness
- Shock/Vibration Dampening
- Corrosion Resistance

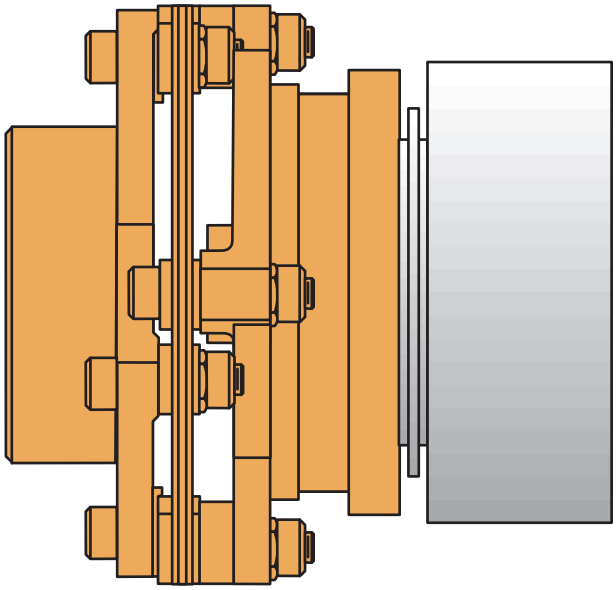

ENGAGED

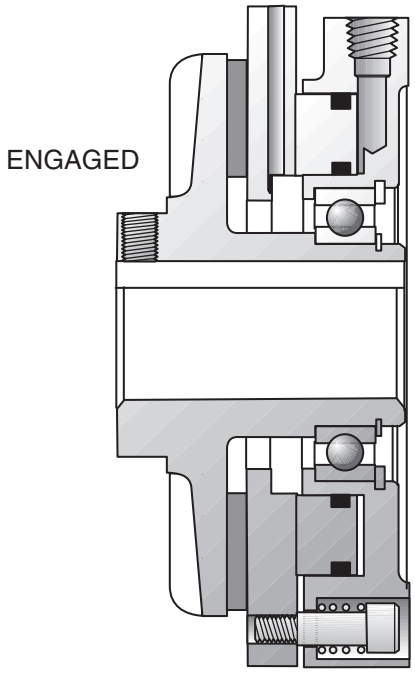

Friction Brakes

Low inertia, high thermal dissipation and self-adjusting facings make these ideal for many applications. Choose between Straight or Tapered Bore units in a wide range of operational specifications. Each Model comes in a Standard Bore size, with customization possible through the use of Bushings. You'll find 24 Standard Models and 4 Metric Models from which to choose. Friction Brakes address these functions:

- Controlled Deceleration
- Rapid Cycling/Indexing
- Positioning
- Tension Control
- Stopping/Holding

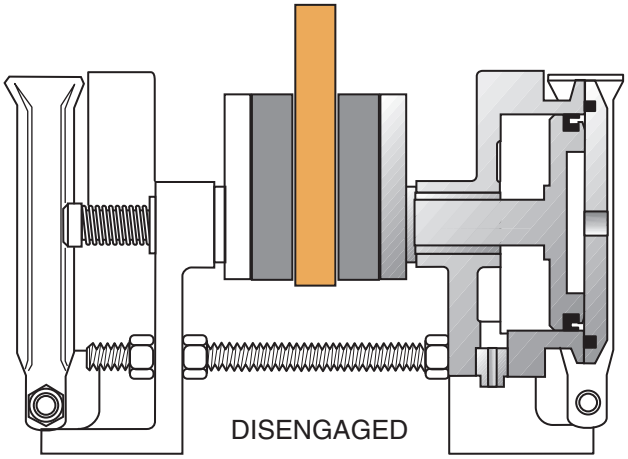

Caliper Brakes

10 Standard Models address a wide range of Caliper Brake requirements. Choose between Spring or Air Actuation, 10 Disc diameters and a variety of design styles. Caliper spacing is movable and shoes are adjustable on many Models. Caliper Brakes address these functions:

- Controlled Deceleration
- Tension Control
- Stopping/Holding

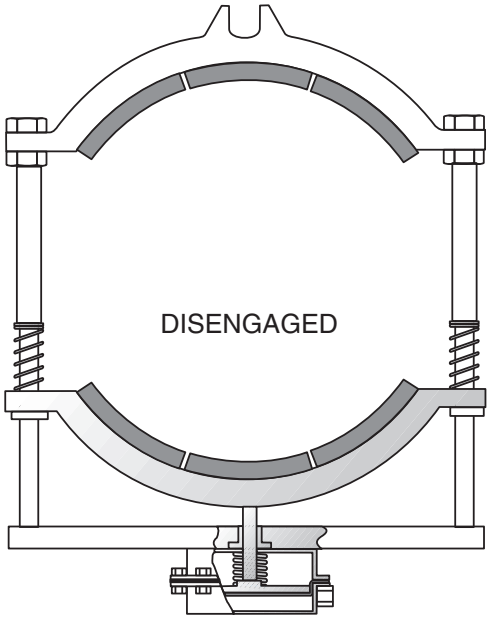

Drum Brakes

7 Standard Models offer maximum efficiency and dependability. All can mount on the shaft, a few can also bracket mount. 3 Models have a hinge top design for use with removable brake drums. Drums available in Standard Bore sizes or without bore customization. Operational specifications provide a wide range of application criteria. Drum Brakes address these functions:

- Controlled Deceleration
- Tension Control
- Stopping/Holding

Spring Engaged Brakes

Spring Engaged Brakes are available in 18 Standard Models with either Straight or Tapered Bore and 4 Metric Models with a Straight Bore. A variety of Standard Bore sizes are available, some Models provide bore size customization. Product specifications cover a broad range of operational criteria. Spring Engaged Brakes address these functions:

- Stopping/Holding

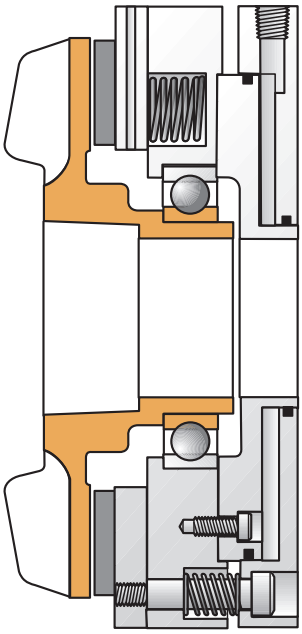

DISENGAGED

Thru-Shaft Mount Clutch-Brakes

Thru-Shaft Mounted Clutch/Brakes combine the features of a Friction Clutch with a Friction Brake into a single unit. 9 Standard Models offer Pilot Mount, Sheave Mount and Pilot Mount with Coupling Half options. Pilot Mount units are available in 2 Standard Bores sizes with customization possible with Bushings and Couplings. Thru-Shaft Mount units come in a range of bore sizes and Sheave styles. Operation specifications throughout the category will address almost any need. Thru-Shaft Mount Clutch-Brakes address these functions:

- Controlled Acceleration
- Controlled Deceleration
- Inching/Jogging
- Stopping/Holding
- Disconnect

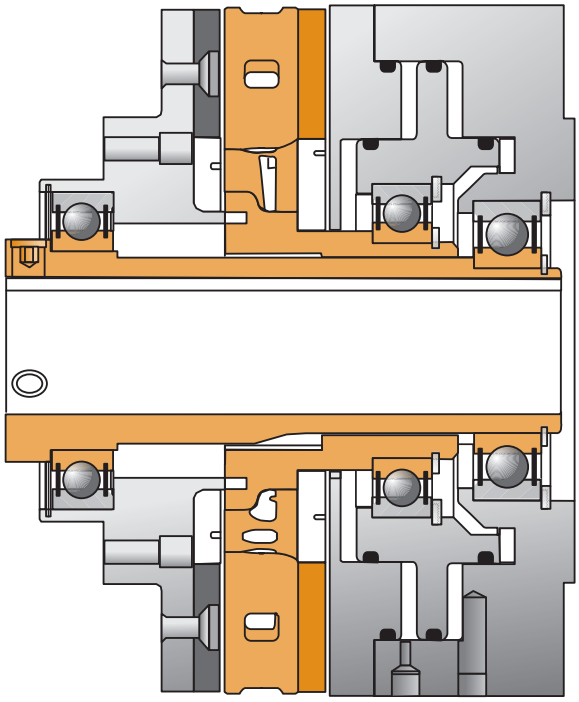

CLUTCH DISENGAGED BRAKE DISENGAGED

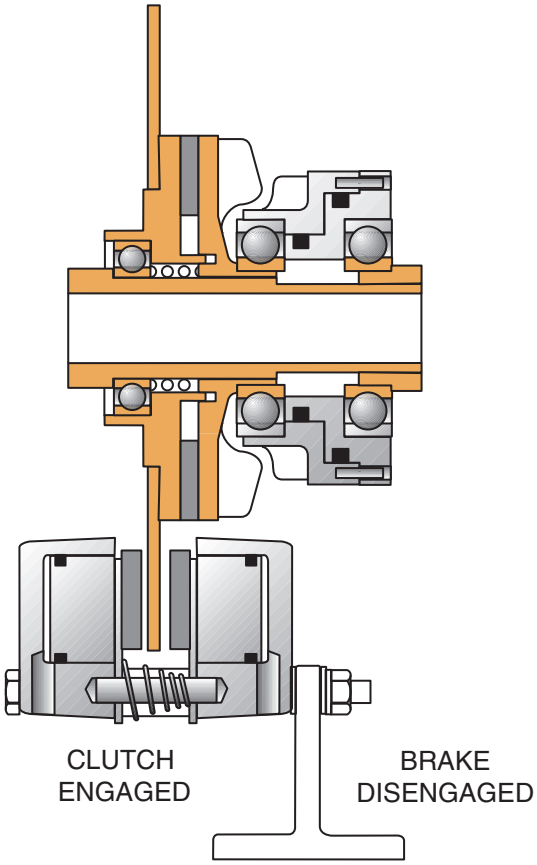

Clutch-Disc Caliper Brakes

Thru-Shaft Mounted Clutch-Disc Caliper Brakes combine the features of a Friction Clutch with a Disc-Caliper Brake. 4 Standard Models offer Pilot Mount, Sheave Mount and Pilot Mount with Coupling Half options. Pilot Mount units are available in 2 Standard Bore sizes, with customization possible with Bushings and Couplings. A Sheave Mount unit is available for each model. A Caliper Brake with "T" Bracket and standard Disc sizes for each model round out product line. Operation specifications throughout the category will address almost any need. Clutch-Disc Caliper Brakes address these functions:

- Controlled Acceleration
- Controlled Deceleration
- Inching/Jogging
- Stopping/Holding
- Disconnect

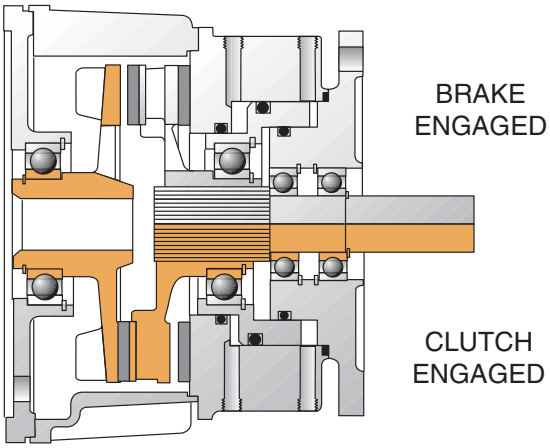

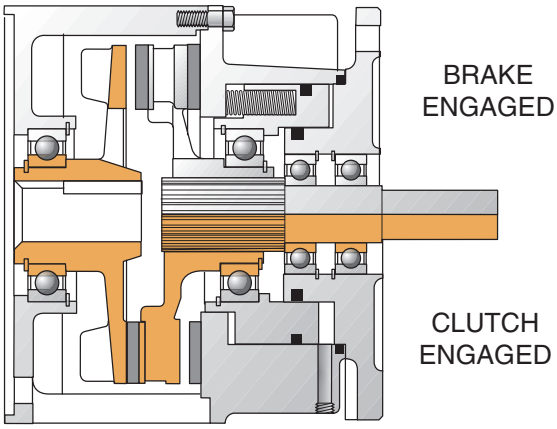

NEMA "C " Flange Clutch-Brakes

Designed to mount directly to motors and reducers to provide absolute control. There are 5 Standard Models in an Enclosed design, 2 Standard Enclosed Models which are BISSC certified, 4 Standard Models in an Enclosed Spring Engaged design; and 6 Metric Models in an Open design, 7 Metric Models in an Enclosed Design, and 7 Metric Models in an Enclosed Spring Engaged design. Additional options include Mounting Feet and an Input Unit, for use in mounting a pulley. Finish options include black or electroless nickel coating for most models. 4 Standard Bore sizes are available for each model. Operational specifications guarantee performance. This Clutch-Only Enclosed Standard Model is available for "cleanroom" applications calling for only a Clutch applications (it comes only in the black finish.) BISSC certified models provide maximum protection against corrosion and bacteria build-up. NEMA "C" Flange Clutch-Brakes address these functions:

- Controlled Acceleration
- Controlled Deceleration
- Inching/Jogging
- Stopping/Holding

Modular System for NEMA "C" Flange Mounting

Custom design a power transmission system to fit your specific requirements, using the Nexen Modular System. Interchangeable modular components provide complete flexibility for today's application and tomorrow's changing needs. 4 Modular Units in 4 different sizes enable you to create either a Clutch, Brake or Clutch-Brake configuration. Mounting capabilities are also flexible; choose between Vertical, Horizontal or Gearbox to motor or reducer. Optional Foot Mount Sets come in 2 different designs. Optional Guards allow you to enclose your system. Operation specifications address a broad range of application requirements. This is the System of choice for many customers. The Modular System addresses these functions:

- Controlled Acceleration
- Controlled Deceleration
- Inching/Jogging
- Stopping/Holding

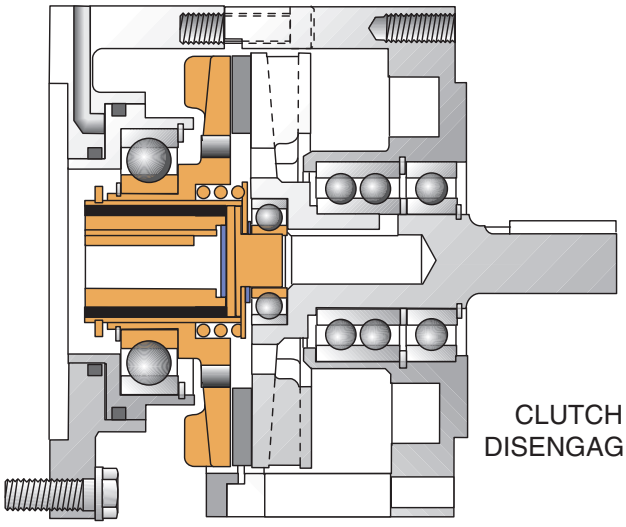

CLUTCH DISENGAGED

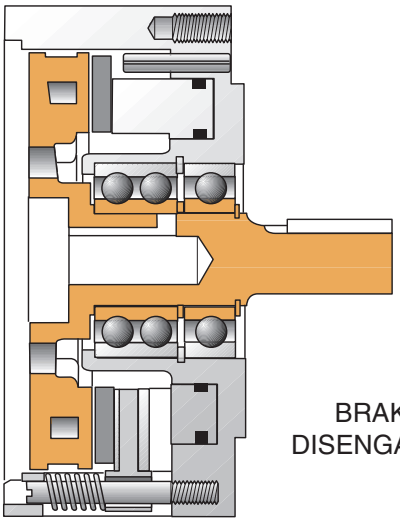

BRAKE DISENGAGED

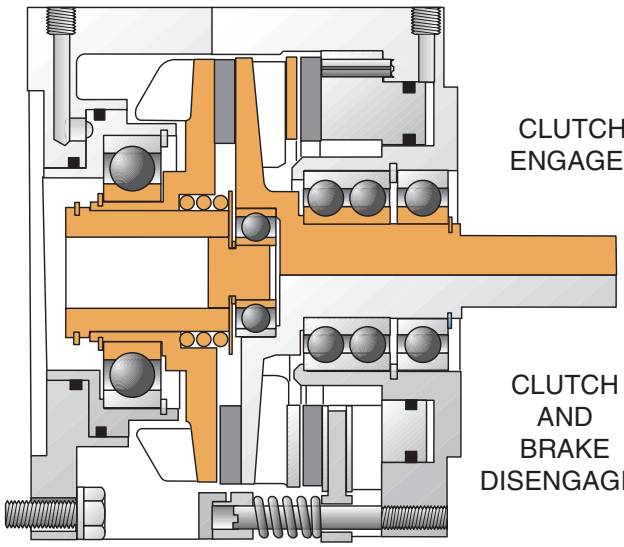

CLUTCH ENGAGED

CLUTCH AND BRAKE DISENGAGED

WEB PRODUCTS APPLICATION GUIDE

Everything you need to control web quality and productivity from unwind through windup, roll after roll.

Nexen offers you a wide range of web control systems and components, supported by our expert technical support and service team.

With Nexen, you can be assured of consistent, high-quality output from your web printing or converting process.

Nexen controls are used successfully with applications as diverse as:

- paper
- film
- rubber
- labels
- textiles
- laminates
- paperboard
- metal strip
- non-wovens
- foil
- plastics
- wire

Precise enough for the laboratory, yet rugged enough for the mill, Nexen control systems are delivered and backed by the recognized leader in web control equipment for almost 50 years.

Everything you need to control web quality and productivity from unwind through windup, roll after roll.

Tension Control Systems

Nexen can help you address your tension control problems at each stage of the process – from unwind through intermediate zone to windup. Nexen systems make it easy to deal with variations in thickness, elasticity, thermal expansion, poorly wound rolls and changing roll diameter. You also get taper tension control when you need it.

Nexen tension control systems offer you cost-cutting technologies to provide:

- Ease of operation
- Accurate, close tolerance measurement
- Indication of tension within the web
- Splice-making capabilities at full line speed

and Clutches

Nexen's line of tension control clutches and brakes offers you the most comprehensive package of features in the industry, in a range of sizes to match your application.

Our patented designs offer you superior, precise torque control at all air pressures. In addition, a ventilated rotor creates an airflow that pulls cooler ambient air through the brake or clutch and dissipates heat away from the unit for better performance.

- Nexen clutches and brakes deliver high thermal dissipation.
- Unique patented airflow design transfers heat away from the unit for better performance.
- Lower-weight rotors mean lower rotational inertia to provide precise control right down to the core and reduced product waste.
- Simple diaphragm actuated calipers offer the widest possible torque range.
- Easy change friction facings.

Web Guiding Systems

Choose from edge position, center position or line follower controls for pinpoint guiding in the unwind, intermediate or windup stage.

A variety of sensors, roll lengths and controllers are available in freestanding web guide models, along with electrical linear actuators for positioning your unwind and windup stands. Self-contained units offer everything you need in a single package.

You receive Nexen's state-of-the art electronics for the precise alignment you need for unwind, intermediate and windup control. Now you can produce a quality product at higher line speeds without wrinkling or distortion, while you reduce scrap.

- Displacement guiding
- Accurate roll stand positioning
- Edge, center or line following position control.

Tension Control Brakes

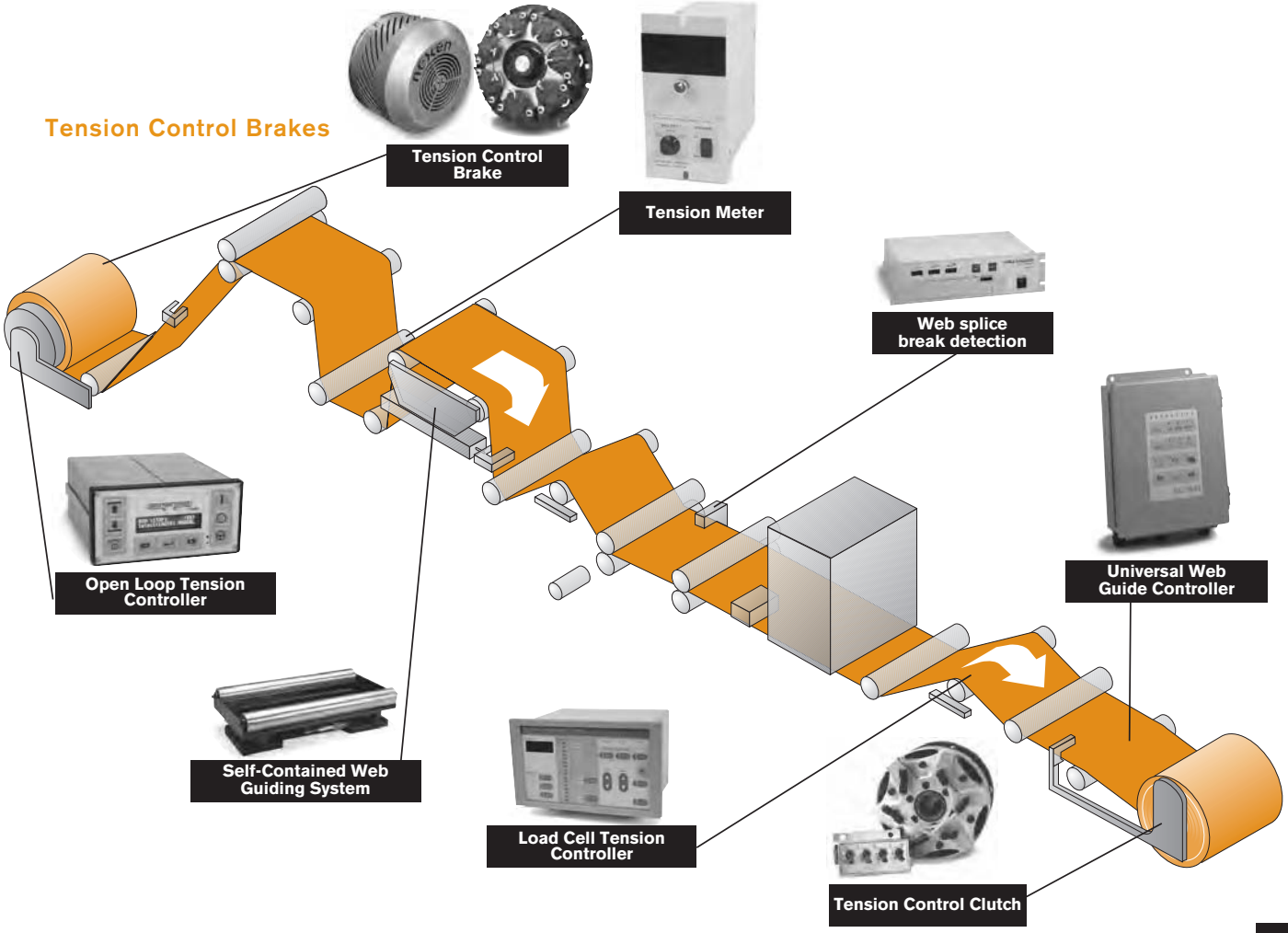

TENSION CONTROL SYSTEMS

Precise tension control is vital to any web- or strip-fed operation, the product – whether paper, plastics, metal strip, rubber sheet or wire – must be fed under tension, processed under tension and wound up again under tension.

Factors such as poorly wound rolls, elasticity, roll diameter change and irregularities in web thickness cause significant variations in web tension.

Some applications require taper tension on windup. Winding begins at relatively high tension, with a gradual reduction, or tapering, in tension as the roll builds in diameter.

At the very least, your tension control system must compensate for the change in roll diameter. For precise control and high line speeds, it must also be capable of measuring and controlling tension within very close tolerances.

Nexen systems are available to control variable speed motors and pneumatic and electric brakes and clutches.

Load Cell Based Tension Control

Nexen's load cell based tension control system is a closed loop system which senses tension in a web and compares it to a set point, or desired tension level and automatically adjusts air pressure to a pneumatic clutch or brake to maintain appropriate web tension. The load cell based system can also control electric clutches and brakes.

The load cell based systems also can be used with variable speed drives to maintain proper tension in internal tension zones or at the windup stand.

- Control accuracy of 1-2 percent – highest of any web control systems
- Ideal for use with brakes, drives and clutches
- Simple to operate –set the tension level and let the controller do the rest
- Allows remote computer to determine the tension and set points for each job

Open Loop Tension Control

The open loop tension control system electronically measures or estimates the diameter of the unwind or windup roll. It then modulates a brake to control the unwind, or a clutch or variable speed drive for windup applications to maintain tension as the diameter varies. Accuracy is typically about 8-10 percent.

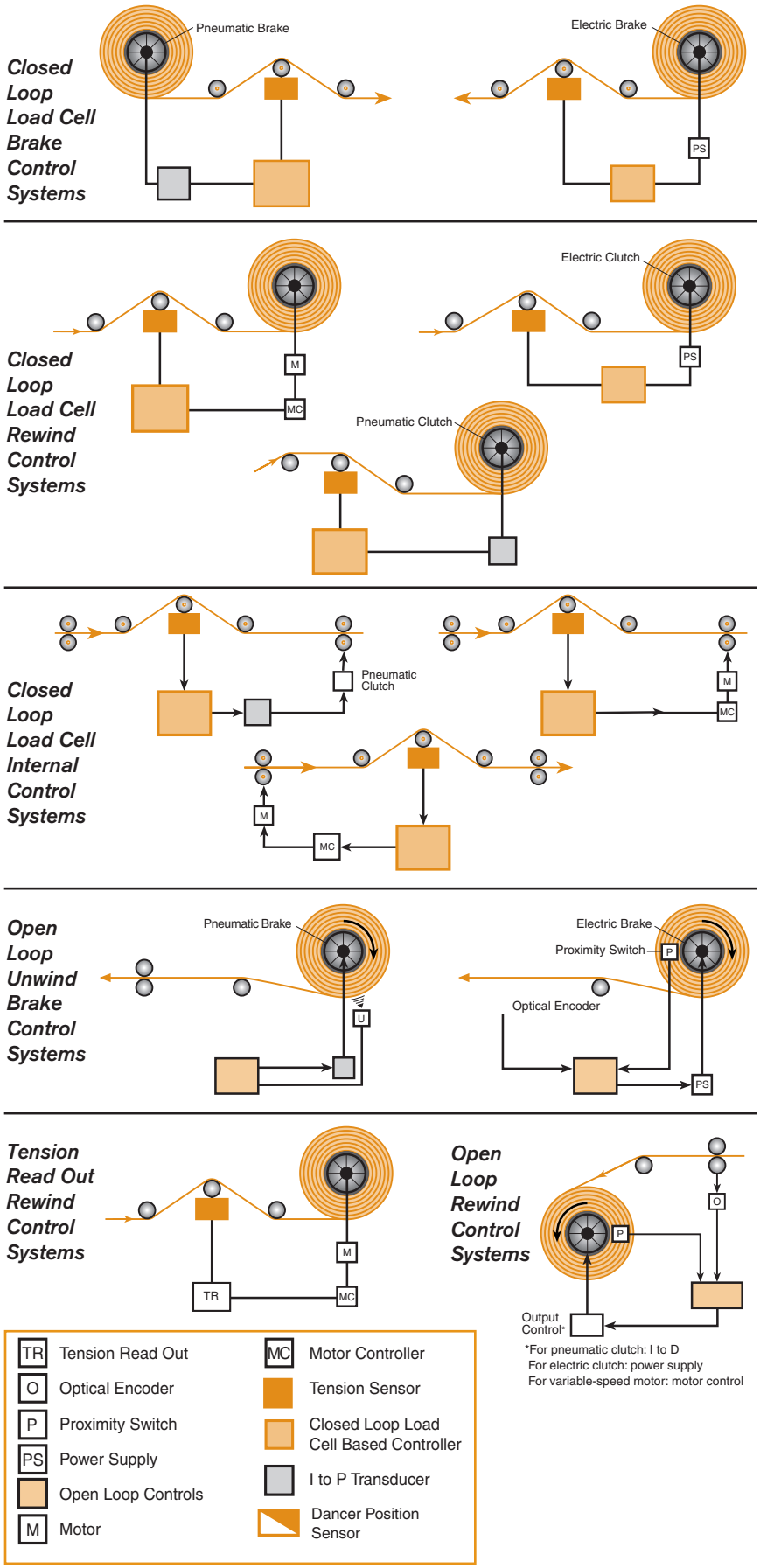

TENSION SENSORS

Tension sensors are the input devices used with load cell based tension systems, both closed loop control systems and tension measuring systems. Tension sensors measure the force applied to the sensor roller and translate this measurement into an electrical signal which can be read by the system.

Nexen offers two types of web tension sensors:

- ***Under pillow block (UPB),***
- ***Sidewall***

The Nexen UPB-type MB Series is based on linear variable differential transformer (LVDT)

MB Series under Pillow Block Sensors

technology, which provides excellent sensitivity, linearity and accuracy combined with a rugged mechanical design for best resistance to mechanical overload.

Nexen strain gauge type sensors also deliver excellent sensitivity and accuracy, while providing added mounting flexibility for applications with significant mounting restrictions.

Nexen strain gauge sensors are available in shaft-end mount styles for machine sidewall flange-mounting or sidewall through-mounting.

Sidewall Mount Strain Gauge Tension Sensors

The force applied to the sensor roll has two components: the tare weight of the sensor roll and bearings, and the force generated by the web tension at the specific angle of wrap around the sensor roll.

The following data are required in order to identify the correct sensor for a given application:

- Maximum web tension
- Sensor roll weight
- Sensor roll diameter
- Web angle
- Sensor mounting angle for UPB sensors
- Pillow block center line height – UPB sensors only

For assistance in selecting the appropriate tension sensor for your application, contact Nexen or your local Nexen representative.

TENSION CONTROL BRAKES AND CLUTCHES

Broad Range Torque Control

Nexen brakes and clutches offer you precise control over the full operating range – from the high torque needed to manage a large roll, to the lower torque requirements for more delicate materials and demanding applications.

Tension Brakes

Nexen XTB brakes feature multiple calipers, each composed of a pair of pistons. The calipers can be configured individually or as separately controlled groups – each with its own torque-to-air pressure range to control a separate tension range.

Cooler Operation for Longer Life

Insufficient cooling of the roll shaft and bearings can lead to shaft crystallization and seal meltdown. The recommended maximum shaft bearing temperature is typically 170°F (76,6°C).

The Nexen XTB has a demonstrated bearing temperature of approximately 140°F (60°C) operating at full torque, compared to 240°F (115,5°C) for competitive models.

The rotor, hub and calipers on Nexen clutches and brakes feature a unique airflow design that draws cooler ambient air over and through the rotor and dissipates heat away from the shaft, bearings and diaphragms of the clutch or brake.

The rotor and the fins on the back of the hub draw cool air into the unit, over the air hoses and toward the caliper. The caliper fins direct the heated air out and away from the unit. The air hoses are located along the inner circumference of the calipers to ensure maximum cooling air flow and protection.

STC Clutch/STB Brake

Lower Rotational Inertia for Greater Control

Nexen brakes and clutches are up to 60-percent lower weight than competition, resulting in up to two-thirds less rotational inertia.

Lower rotational inertia means that you can maintain more precise tension control at low torque levels. This is especially critical when running delicate materials such as tissue and nylon. It can also prevent web breakage as the web nears the end of the roll.

A lower weight brake also contributes to overall system performance by putting less strain on shafts, bearings and stands.

Precise Control at Low Pressure

Nexen STB/STC tension clutches and brakes are pneumatically actuated using a piston /diaphragm combination and are designed for lighter duty than the XTBs.

- No o-rings to stick, no seals to drag.
- Nothing to hinder precise control of torque at low operating pressures – fine control of torque to the end of roll
- 500:1 torque control range for precise control of web processes
- Three piston sets, each with different thrust, for even greater torque range flexibility
- Through-shaft mounting for easy installation
- Compact size
- No rotary air unions required – eliminates "gun drilling" shafts

Easy to Service

The lower weight of Nexen tension brakes and clutches make them easier to install and maintain. You don't need to adjust pad overhang or shim the pads.

Caliper friction pads are quickly replaced by simply releasing a spring-loaded retaining pin. There are no screws or cotter keys to remove. You change the friction pad without removing the caliper from the brake. The pads are completely interchangeable, one size fits all.

The Nexen XTB disc is also easily replaceable without removing the entire brake, simply pull the disc from the shaft. The hub remains locked on the shaft, so the new disc can be reinstalled in precisely the same position.

TENSION METERS AND AMPLIFIERS

Tension Meter

Often you need to only measure the tension in a web, not control it. Nexen has a variety of solutions to meet these needs.

Tension Meter

Nexen tension meters precisely measure web tensions with a digital tension display on the front panel. Their 0-10 VDC or 4-20 mA analog output is also well suited as a proportional tension data signal to process controllers, data loggers and variable-speed motor controls.

You can also use one of the sensors for narrow webs, single strands of wire, or any other narrow material where tension will not vary from one side to the other.

Nexen tension meters are also useful as a tension readout-only device to measure intermediate-zone tension.

Tension Amplifiers

Nexen tension amplifiers interface with load cell or strain gauge sensors. They provide an excitation signal to the sensors and separately amplify the return signal from each sensor before combining them to provide a signal proportional to the total tension.

Tension amplifiers are ideal for accurate, low-cost tension measurement of a web process interfaced with machine controls such as data loggers, process controllers, drive controls, host computers and other applications requiring a precise tension interface.

Tension Amplifiers Offer:

- Low cost signal conditioning for LVDT or strain gauge tension sensors
- Wide tension range for flexible installation
- Ideal for use with machine controls where local readout is not required
- Includes both 0-10 VDC and 4-20 mA outputs

WEB GUIDING SYSTEMS

Controlled lateral alignment of the web is absolutely essential to providing high quality product and reducing scrap and waste. Nexen web guiding systems are designed, tested and proven to give you that alignment

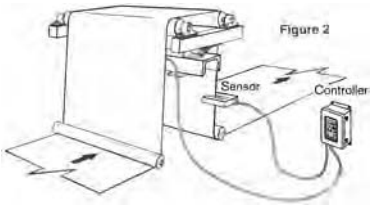

Web Guiding Applications

Unwind Guiding *(See Figure 1)*
As material is unwound and fed into a machine, it must be properly aligned with the process to be performed upon it.
Unwind guiding is accomplished by sensing

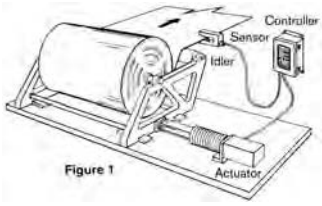

the web as it enters the machine. The sensor is mounted as part of the main machine frame and placed so that its center is located at the desired position of the web. The controller directs movement of the actuator, which moves the roll stand laterally across the machine to bring the edge of the roll into the center of the sensor.

Intermediate Guiding
This method is normally used in the intermediate zone to make minor corrections in position. The steering rolls pivot, directing the web to the left or right to bring it into center position within the sensor.

Displacement Guides *(See Figure 2)*
Displacement guides consist of a pair of pivoting rollers with a pair of stationery idle rollers, one lead-in roller before the guide and a lead-out roller after the guide. This type of guide induces pure, out-of-plane twisting of the web, which is gentler on a web than a steering guide. Much shorter free spans are required before and after guiding when compared to a steering guide. Displacement guides are often used on printing presses and other applications where space is at a premium.

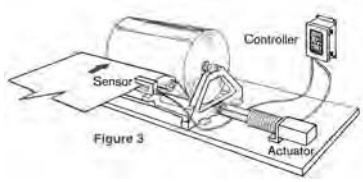

Windup Guiding *(See Figure 3)*
The position of the web is monitored by a sensor mounted on the moveable windup roll stand, positioned before the last roll on the machine. As the web shifts laterally, the controller signals the actuator to move the windup roll into line with the web edge.

Chase Guiding
Chase guiding is a technique used to align the edge of two or more webs or to align a process to a web. The sensor is moved by the actuator to “chase” the edge of the web.

In the case of aligning several web edges, the sensors for the second and subsequent webs are aligned with the chase sensor and move in tandem with it. This moves the target or center of the sensor for all subsequent webs, which in turn causes the guides to align their webs to the target.

To align the process to the web, the sensor is mounted to the moveable process component. The actuator then moves the component, causing the sensor to chase the web edge or printed line.

GUIDE SENSING OPTIONS
WEB GUIDE SENSORS AND CONTROLLERS

Ultrasonic Web Guide Sensor

LED Infrared Web Guide Sensor

Position Control Configurations

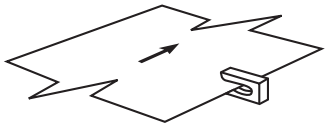

Edge Position Control
One edge of the material is aligned with the process at all times. The position of this edge remains constant throughout all processes. The opposite edge is permitted to run free and is eventually edge-trimmed to meet the final specified web width.

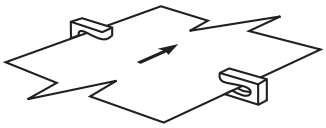

Center Position Control
This technique requires one sensor on each side of the web. The objective is to maintain the center of the web on the mean centerline of the machine. If the web varies in width, center position control will maintain an equal edge trim on each side of the web, to be removed later in the processing.

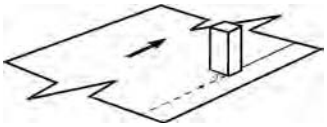

Line Follower Control
Line follower control is always employed for previously processed materials, using a sensor to follow a line or the edge of a pattern of print or coating material previously laid down on the web.

Ultrasonic Sensors

Ultrasonic sensors are used particularly for edge or center control of photosensitive materials such as photographic film and print paper, and with transparent or translucent films bearing a coating, printing or an opaque surface near the edge. A high frequency sound is transmitted across an air gap to a receiving unit. Interruption of the signal is interpreted as a change in position of the web material. They can also be used with opaque materials.

Infrared Sensors

A pulsed LED transmits an infrared signal across the web edge to a light sensitive sensor; edge position of the material is determined from the amount of light sensed at the receiving unit. Infrared sensors can also be configured in pairs for center position control. The infrared signal is not affected by ambient light and is useful for processing of certain photosensitive materials. Infrared sensors are used for opaque materials only.

Line Follower Sensors

A line following sensor bounces light off a web as it passes around a transport roll in the machine. It is received by a sensing element contained in the same housing. This type of sensor is normally used to follow a printed line or the edge of a printed pattern on the web.

Web Guide Controller
Self Contained

Web Guide Controller

Web Guide Controllers

A Nexen web guide controller receives signals from a web position sensor and translates them into control signals for web position drive motors. With the appropriate sensor, they offer control accuracy to within ±0.004 inches (±0,01mm) of an edge or centerline position.

The purpose of the controller is to provide automatic positioning of the web in relation to the sensor. Web position information from the sensor is fed to the web guide controller. The controller's motor control drives an electrical linear actuator to correct the web position by adjusting the roll stand or guide roll mechanism.

AUXILIARY PRODUCTS

Splice Detector System

Splice Detector

System Controller

The Splice Detector System is a visible light system used to sense splices or double thicknesses in translucent materials. It provides both a visual indication and a relay signal at each splice.

This system is ideally suited for use where high nipping pressure in a machine must be momentarily relaxed to allow a splice to pass through without damaging the web, printing blanket or other components.

This system typically does not require operator intervention. A change in web thickness of more than three seconds duration will cause the system's controller to recalibrate to the new web thickness.

Paper Checker System

Paper Checker

The Paper Checker System detects web breaks and splices on web machines.

This system makes use of an ultrasonic sensor to prevent the false triggering that can result from the presence of print or other patterns on the web material and for use with photo sensitive materials. Each break or splice is indicated by a separate relay signal and front panel indicator lights.

This Nexen Paper Checker System can be used on transparent to fully opaque webs and with laminates of paper, film and foil. It handles web speeds from 30 to more than 3000 feet per minute, (10 to 1000 meters per minute).

Product Function/Selection Chart

Product Groups	Friction Clutches	Tooth Clutches	Multi-Disc Clutches	Dual Plate Clutches	High Capacity Clutches
General Features					
Number of Model Options	15 Standard 5 Metric	40 Standard 35 Metric	7 Standard 0 Metric	4 Standard 0 Metric	16 Standard 0 Metric
Functions					
Controlled Acceleration	Yes			Yes	Yes
Inching/Jogging	Yes			Yes	Yes
Cycling/Indexing	Yes			Yes	Yes
Positioning	Yes	Yes	Yes	Yes	Yes
Reversing/Multiple Speed	Yes	Yes	Yes	Yes	Yes
Tension Control, Rewind	Yes			Yes	
Overload Protection	Yes	Yes		Yes	
Disconnect/Connect	Yes	Yes	Yes	Yes	Yes
Positive Drive		Yes			

nexen®

"Air Champ"®

In accordance with Nexen's established policy of constant product improvement, the specifications contained in this document are subject to change without notice. Technical data listed in this document are based on the latest information available at the time of printing and are also subject to change without notice. For current information, please consult:
www.nexengroup.com

FRICTION CLUTCHES

This Section Contains: . . . . .Page

CLUTCHES

Clutch Product Function/Selection Chart . . .28
Friction Clutch Selection Chart 30
Micro Model (M) 31
Bantam Weight (BW & B-275) 32-33
F-450 & L-600 Models 34-35
M-800 & H-1000 Models 36-37
Extra Heavy Weight Models (XHW) 40-41
FW, LW, MW & HW Models 42

METRIC FRICTION CLUTCHES

BW, B-275,F-450, L-600, M-800, H-1000 . . .38-39

DUAL PLATE CLUTCHES

DPC Selection Chart 43
DPC Model Overview 44-45
DPC-9T Model 46-47
DPC-11T Model 48-49
DPC-13T Model 50-51
DPC-15T Model 52-53
DFC-1650 & 2200 Models 54-55

This Section Contains: . . . . .Page

HIGH CAPACITY CLUTCHES

DFE & QFE Model Overview 56-57
DFE Model Clutch & Brake Elements . . .58-59
QFE Model Clutch & Brake Elements . . .60-61

CONVEYOR CLUTCHES

LSCC-32, 44, 54 Models Straight Bore . . .62-63

MULTI-DISC CLUTCHES

4HP Model Multe-Disc 64-65
4HP Flexible Couplings 66-67

FRICTION CLUTCH SELECTION CHART

Friction clutch recommendation is based upon air pressure of 50 psi, transmitted horsepower and speed.

RPM

TRANSMITTED HORSEPOWER	100	200	300	400	500	600	700	800	900	1000	1100	1200	1300	1400	1500	1600	1700	1800	2200	2600	3000	3600
1/36	M	M	M	M	M	M	M	M	M	M	M	M	M	M	M	M	M	M	M	M	M	M
1/20	BW/B-275	BW/B-275	M	M	M	M	M	M	M	M	M	M	M	M	M	M	M	M	M	M	M	M
1/18	BW/B-275	BW/B-275	M	M	M	M	M	M	M	M	M	M	M	M	M	M	M	M	M	M	M	M
1/15		BW/B-275	BW/B-275	M	M	M	M	M	M	M	M	M	M	M	M	M	M	M	M	M	M	M
1/12		BW/B-275	BW/B-275	M	M	M	M	M	M	M	M	M	M	M	M	M	M	M	M	M	M	M
1/10		BW/B-275	BW/B-275	BW/B-275	M	M	M	M	M	M	M	M	M	M	M	M	M	M	M	M	M	M
1/9		BW/B-275	BW/B-275	BW/B-275	BW/B-275	M	M	M	M	M	M	M	M	M	M	M	M	M	M	M	M	M
1/8	F-450	F-450	BW/B-275	BW/B-275	BW/B-275	BW/B-275	M	M	M	M	M	M	M	M	M	M	M	M	M	M	M	M
1/6	F-450	F-450	F-450	BW/B-275	BW/B-275	BW/B-275	BW/B-275	BW/B-275	M	M	M	M	M	M	M	M	M	M	M	M	M	M
1/4	L-600	F-450	F-450	F-450	BW/B-275	BW/B-275	BW/B-275	BW/B-275	BW/B-275	BW/B-275	BW/B-275	BW/B-275	M	M	M	M	M	M	M	M	M	M
1/3	L-600	F-450	F-450	F-450	F-450	F-450	BW/B-275	BW/B-275	BW/B-275	BW/B-275	BW/B-275	BW/B-275	BW/B-275	BW/B-275	BW/B-275	BW/B-275	BW/B-275	M	M	M	M	M
1/2	M-800	L-600	L-600	F-450	F-450	F-450	F-450	F-450	BW/B-275	BW/B-275	BW/B-275	BW/B-275	BW/B-275	BW/B-275	BW/B-275	BW/B-275	BW/B-275	BW/B-275	BW/B-275	M	M	M
1	H-1000	H-1000	L-600	L-600	L-600	L-600	F-450	F-450	F-450	F-450	F-450	F-450	F-450	F-450	F-450	F-450	F-450	BW/B-275	BW/B-275	BW/B-275	BW/B-275	BW/B-275
2	H-1000	H-1000	M-800	M-800	M-800	L-600	L-600	L-600	L-600	L-600	L-600	L-600	L-600	L-600	L-600	L-600	L-600	F-450	F-450	F-450	F-450	F-450
3	H-1000	H-1000	H-1000	M-800	M-800	M-800	M-800	M-800	L-600	L-600	L-600	L-600	L-600	L-600	L-600	L-600	L-600	L-600	F-450	F-450	F-450	F-450
5	XHW	H-1000	H-1000	H-1000	H-1000	M-800	M-800	M-800	M-800	M-800	M-800	M-800	M-800	M-800	L-600	L-600	L-600	L-600	L-600	L-600	L-600	F-450
7½		XHW	H-1000	H-1000	H-1000	H-1000	H-1000	H-1000	M-800	M-800	M-800	M-800	M-800	M-800	M-800	M-800	M-800	M-800	L-600	L-600	L-600	L-600
10		XHW	XHW	H-1000	H-1000	H-1000	H-1000	H-1000	H-1000	H-1000	H-1000	M-800	M-800	M-800	M-800	M-800	M-800	M-800				
15			XHW	XHW	H-1000	H-1000	H-1000	H-1000	H-1000	H-1000	H-1000	H-1000	H-1000	H-1000	H-1000	H-1000	H-1000	H-1000				
20				XHW	XHW	H-1000	H-1000	H-1000	H-1000	H-1000	H-1000	H-1000	H-1000	H-1000	H-1000	H-1000	H-1000	H-1000				
25					XHW	XHW	XHW	H-1000	H-1000	H-1000	H-1000	H-1000	H-1000	H-1000	H-1000	H-1000	H-1000	H-1000				
30					XHW	XHW	XHW	XHW														
40								XHW	XHW	XHW	XHW											
50										XHW	XHW											

REFER TO DUAL PLATE CLUTCH PRODUCTS PAGE 43

REFER TO DUAL PLATE CLUTCH PRODUCTS PAGE 43

IMPORTANT NOTES:

1. For static torque ratings at different air pressures, refer to individual models to ensure conformity.
2. For operating speeds over 1800 rpm, refer to individual models or consult Nexen to ensure conformity.
3. Limited to peak thermal input rates of .9 HP_T per square inch of interface area.
4. Bars equal PSI x 0.0689.

Micro Friction Clutch

Mounting Style	Product Number	Bore (In)	Shipping Wt. (Lbs)
Pilot	856800	0.375	3

For Inertia Values of components, see page 359.
Required shaft insertion into clutch hub = minimum of 1 inch from Pilot side.

MICRO MODEL–APPROXIMATE DIMENSIONS (INCHES)

Pilot Mount

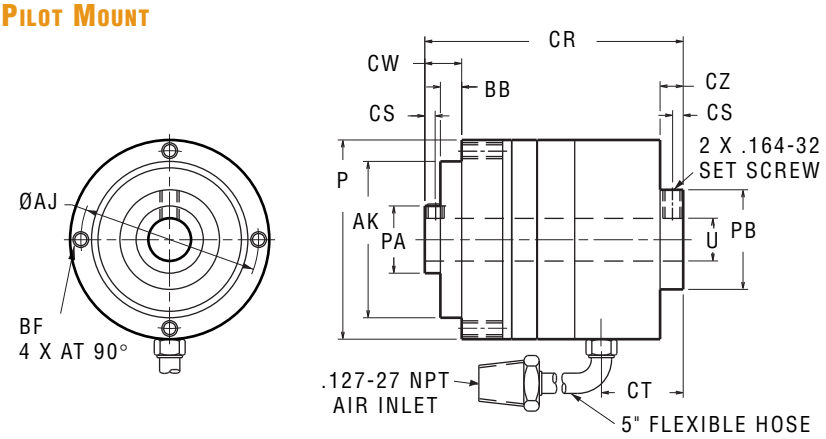

PRODUCT NUMBER	AJ	AK $^{+.000}_{-.001}$	BB	BF	CR	CS	CT	CW	CZ	P	PA	PB	U $^{+.001}_{-.000}$
856800	1.562	1.374	0.19	.138-32	2.27	0.09	0.72	0.32	0.20	1.75	0.59	0.88	0.375

Torque Vs. Air Pressure

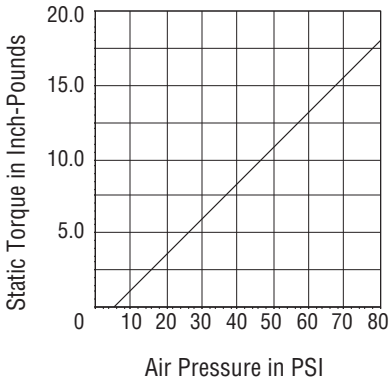

NOTE: Dynamic torque is approximately 85% of static torque.

MICRO FRICTION CLUTCH

The Micro Friction Clutch provides high performance in a small package:

- Static Torque capacity up to 18 In. Lbs. @ 80 psi
- Maximum Operating Speed up to 3600 rpm
- Transmitted Horsepower values from 0.06 to 0.50
- Thermal Horsepower rating of 0.06 @ 1800 rpm
- Heat Sink capacity of 1900 Ft. Lbs.

This Pilot Mount clutch mounts easily and comes with:

- 0.375 inch **Standard Bore**
- 5 inch hose with .190-32 by .125 NPT included.

BANTAM WEIGHT MODEL BW FRICTION CLUTCH

The BW Friction Clutch provides excellent performance:

- Static Torque capacity up to 100 In. Lbs. @ 80 psi
- Maximum Operating Speed up to 3600 rpm
- Transmitted Horsepower values from 0.05 to 1.00
- Thermal Horsepower rating of 0.13 @ 1800 rpm
- Heat Sink capacity of 5650 Ft. Lbs.
- **Corrosion-Resistant** Model availiable for damp environments

This clutch is thru-shaft mounted to provide design versatility in **5 Models**:

- **4 Sheave Mount** units provide 1-"3V" or 1-"A" Groove options
- **5 Pilot Mount** units with different standard bore sizes
- **Standard Bore** sizes of 0.500 and 0.625 inches
- Customize the bore to your shaft diameter with a **Bushing** or **Coupling Half**
- Tapped holes provided for easy mounting in applications with pulleys, sprockets or gears
- 8.25 inch hose included
- **BW** is equipped with Thrust Bearings and a Single Key Splined Hub.
- **B-275** is equipped with Sealed, Radial Bearings and a Multi-tooth Splined Hub.

BW and B-275 Model Clutches

Clutch Style	Product Number	Sheave Diameter	Bore (In)	Key Size (sq)	Shipping Wt. (Lbs)
Pilot Mount, BW	800100	--	0.625	0.188	4
Pilot Mount, BW	800111	--	0.500	0.125	4
Pilot Mount Corrosion-Resistant, BW	800107	--	0.625	0.188	4
Pilot Mount, B-275	802870	--	0.625	0.188	4
Pilot Mount, B-275	802871	--	0.500	0.125	4
Sheave Mount, B-275, 1-"A"	802872	3.00 PD	0.625	0.188	4
Sheave Mount, B-275, 1-"3V"	802873	2.750 OD	0.625	0.188	4
Sheave Mount, 1-"3V"	800000	2.750 OD	0.625	0.188	4
Sheave Mount, 1-"A"	800004	3.000 PD	0.625	0.188	4
Pilot w/Coupling Half	Select a Pilot Mount and a Coupling Half to achieve this style of mount.				

For Inertia Values of components, see page 359.
Keys are included. Required shaft insertion into clutch hub = minimum of 1.50 inches from Pilot side.

Bushing Options (for 0.625 bore clutches only)

Bushings fit within the bore of the clutch, reducing the bore to the amount indicated.

Product Number	Reduces Clutch Bore Size to (In)	Shipping Wt. (Lbs)
800200	0.500	1
800900	No Bore/Customer machines	1

Coupling Half Options

A Coupling Half is used for in-line applications. To achieve a Pilot Mount with Coupling Half mounting configuration:

1. Select a Pilot Mount Clutch from above;
2. Select a Coupling Half from the chart below which fits your shaft requirements;
3. Order Clutch and Coupling Half separately.

Product Number	Bore Size (In)	Key Size (sq)	Shipping Wt. (Lbs)
800300	0.500	0.125	1
800307	0.500	0.125	1①
800400	0.625	0.188	1
800500	0.750	0.188	1

①Nickle Plated

Pulleys, Sprockets, Gears

Tapped holes are provided for ease of mounting. Nexen does not furnish these items. For minimum sprocket requirements, see page 369.

Torque Vs. Air Pressure

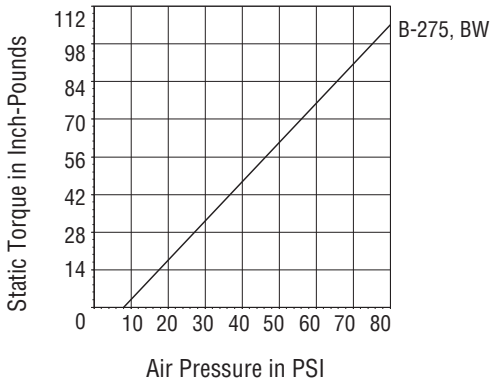

NOTE: Dynamic torque is approximately 85% of static torque.

BW AND B-275 MODEL CLUTCHES - APPROXIMATE DIMENSIONS (INCHES)

Pilot Mount

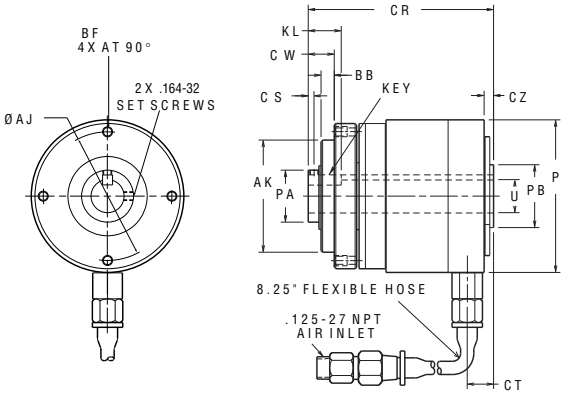

PRODUCT NUMBER	AJ	AK ±.001	BB	BF	CR	CS	CT	CW	CZ	KL	KEY (SQ)	P	PA	PB	U +.001 -.000
800100	2.437	2.124	0.25	.190-32	3.51	0.11	0.50	0.49	0.18	0.62	0.188	2.89	0.98	1.19	0.625
800107	2.437	2.124	0.25	.190-32	3.51	0.11	0.50	0.49	0.18	0.62	0.188	2.89	0.98	1.19	0.625
800111	2.437	2.124	0.25	.190-32	3.51	0.11	0.50	0.49	0.18	0.62	0.125	2.89	0.98	1.19	0.500
802870	2.437	2.124	0.25	.190-32	3.51	0.11	0.50	0.49	0.18	0.62	0.188	2.89	0.98	1.19	0.625
802871	2.437	2.124	0.25	.190-32	3.51	0.11	0.50	0.49	0.18	0.62	0.125	2.89	0.98	1.19	0.500

Pilot Mount w/Coupling Half

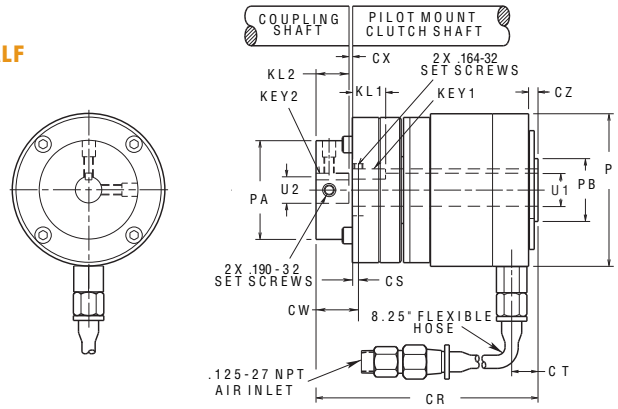

COUPLING PRODUCT NUMBER	CR	CS	CW	CX	CZ	KL1	KL2	KEY 1 (SQ)	KEY 2 (SQ)	P	PA	PB	U1 +.001 -.000	U2 +.001 -.000
800300	4.20	0.11	0.69	0.07	0.18	0.62	0.62	0.188	0.125	2.89	1.87	1.19	0.625	0.501
800307	4.20	0.11	0.69	0.07	0.18	0.62	0.62	0.188	0.125	2.89	1.87	1.19	0.625	0.501
800400	4.20	0.11	0.69	0.07	0.18	0.62	0.62	0.188	0.188	2.89	1.87	1.19	0.625	0.625
800500	4.20	0.11	0.69	0.07	0.18	0.62	0.62	0.188	0.188	2.89	1.87	1.19	0.625	0.751

Sheave Mount

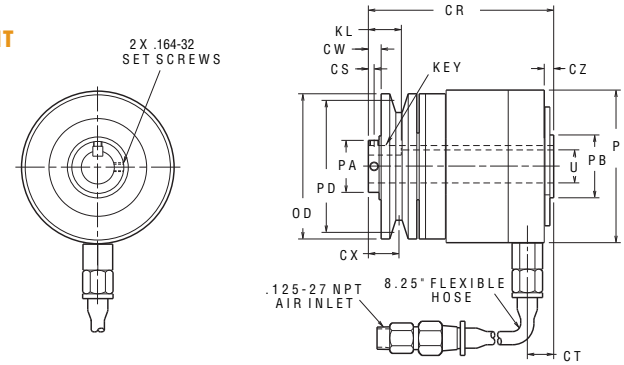

PRODUCT NUMBER	SHEAVE BELT	SHEAVE GROOVE	OD	PD	CR	CS	CT	CW	CX	CZ	KL	KEY (SQ)	P	PA	PB	U +.001 -.000
802872	"A"	1	3.250	3.000	3.51	0.11	0.50	0.18	0.55	0.18	0.62	0.188	2.89	0.98	1.19	0.625
800000	"3V"	1	2.750	--	3.51	0.11	0.50	0.24	0.58	0.18	0.62	0.188	2.89	0.98	1.19	0.625
802873	"3V"	1	2.750	--	3.51	0.11	0.50	0.25	0.59	0.18	0.62	0.188	2.89	0.98	1.19	0.625
800004	"A"	1	3.250	3.000	3.51	0.11	0.50	0.17	0.54	0.18	0.62	0.188	2.89	0.98	1.19	0.625

FRICTION CLUTCH MODELS F-450 & L-600

- Static Torque capacity up to:
  F-450/140 In. Lbs. @ 80 psi
  L-600/370 In. Lbs. @ 80 psi
- Maximum Operating Speed up to 3600 rpm
- Transmitted Horsepower values from:
  F-450/0.125 to 5.00
  L-600/0.25 to 10.00
- Thermal Horsepower rating of:
  F-450/0.30 @ 3600 rpm
  L-600/0.75 @ 3600 rpm
- Heat Sink capacity of:
  F-450/30,000 Ft. Lbs.
  L-600/60,000 Ft. Lbs.

8 F-450 & 8 L-600 Models offer design flexibility:

- **Sheave Mount Units:**
  F-450/4 in 1-"3V" or 1-"A" Groove styles, each in 2 sizes
  L-600/6, 4 sizes of 2-"3V" and 2 sizes of 2-"A"
- **2 Pilot Mount** units with different standard bore sizes
- **2 Rewind Clutches** Half-Torque, Precise Interface. Standard or LOCO facing, 0.875 bore size.
- **Standard Bore Sizes:**
  F-450/0.750 and 0.875 inches
  L-600/1.00 and 1.125 inches
- Customize the bore to your shaft diameter with a **Bushing** or **Coupling Half**
- **Includes:**
  F-450/Air Inlet Adapter and 8.25 in. hose.
  L-600/8.25 inch hose.
- **[1] 802864 & 802865**
  Percision Interface Clutches.
  For reduced pulsation in tension control applications.

F-450 & L-600 Model Clutches

Model	Clutch Style	Product Number	Sheave Diameter	Bore (In)	Key Size (sq)	Shipping Wt. (Lbs)
F-450	Pilot Mount	802850	--	0.875	0.188	12
F-450	Pilot Mount, Rewind (Std)	802864 [1]	--	0.875	0.188	10
F-450	Pilot Mount, Rewind (LOCO)	802865 [1]	--	0.875	0.188	10
F-450	Pilot Mount	802855	--	0.750	0.188	10
F-450	Sheave Mount 1-"3V"	802810	3.35 OD	0.875	0.188	10
F-450	Sheave Mount, 1-"3V"	802820	4.50 OD	0.875	0.188	11
F-450	Sheave Mount, 1-"A"	802830	3.80 PD	0.875	0.188	10
F-450	Sheave Mount, 1-"A"	802840	4.40 PD	0.875	0.188	10
L-600	Pilot Mount	805270	--	1.125	0.250	17
L-600	Pilot Mount	805275	--	1.000	0.250	17
L-600	Sheave Mount, 2-"3V"	805210	4.50 OD	1.125	0.250	18
L-600	Sheave Mount, 2-"3V"	805220	5.30 OD	1.125	0.250	19
L-600	Sheave Mount, 2-"3V"	805230	6.00 OD	1.125	0.250	21
L-600	Sheave Mount, 2-"3V"	805240	8.00 OD	1.125	0.250	25
L-600	Sheave Mount, 2-"A"	805250	4.40 PD	1.125	0.250	18
L-600	Sheave Mount, 2-"A"	805260	5.40 PD	1.125	0.250	20
Both	Pilot w/Coupling Half	Select a Pilot Mount and a Coupling Half to achieve this style of mount.				

For Inertia Values of components, see page 359. Keys are included. Required shaft insertion into clutch hub = minimum of F-450/2.00 inches, L-600/2.50 inches from Pilot side.

Bushing Options

(for 0.875 & 1.125 bore clutches only)

Bushings fit within the bore of the existing clutch, reducing the bore to the amount indicated.

Bore Size	Product Number	Reduces Clutch Bore Size to (In)	Shipping Wt. (Lbs)
0.875	827200	0.500	1
0.875	802500	0.625	1
0.875	802600	0.750	1
0.875	803100	No Bore/Customer machines	1
1.125	805100	0.625	1
1.125	804600	0.750	1
1.125	804700	0.875	1
1.125	804800	1.000	1
1.125	805000	No Bore/Customer machines	1

Pulleys, Sprockets and Gears

These can be attached to the clutch for offset shaft applications. Tapped holes are provided for ease of mounting. Nexen does not furnish these items. For minimum sprocket requirements, see page 369.

Coupling Half Options

(see page 367 for coupling specifications)

A Coupling Half is used for in-line applications. To achieve a Pilot Mount with Coupling Half mounting configuration:

1. Select a Pilot Mount Clutch;
2. Order Clutch and Coupling Half separately.
3. Coupling Half is less taper lock bushing. Use Dodge Taper Lock® #1008/F-450, #1215/L-600, (0.500 to 1.000/F-450, 0.500 to 1.125/L-600, inch bore range). Customer furnished.

Model	Product Number	Maximum Bore Size (In)	Shipping Wt. (Lbs)
F-450	802700	1.000	3
L-600	804900	1.125	6

4. Select a Shaft Extension when the driving shaft is smaller in diameter and shorter than the length of the clutch. The Shaft Extension is the same length as the clutch and engages with the key on the pilot end. Extensions fit the driving shaft diameter.

Only for Bore Size	Product Number	Driving Shaft DIA.	Shipping Wt. (Lbs)
0.875	802800	0.500	1
0.875	803000	0.625	1
1.125	805200	0.500	1.5
1.125	805300	0.625	1.5
1.125	805400	0.750	1.5
1.125	805500	0.875	1.5

Torque Vs. Air Pressure

F-450

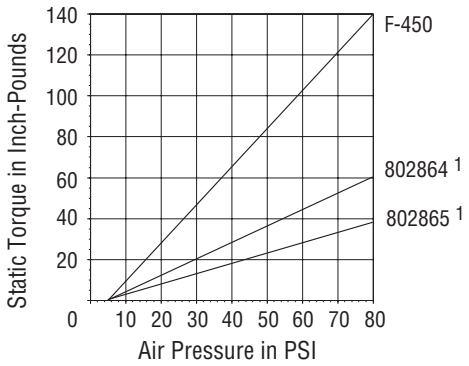

L-600

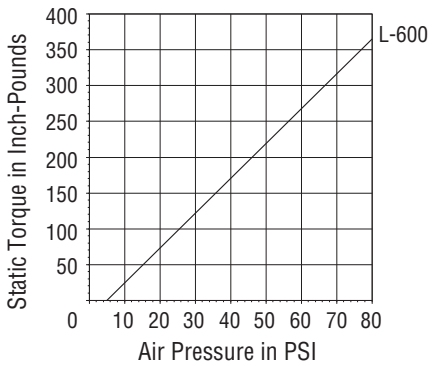

NOTE: Dynamic torque is approximately 85% of static torque.

F-450 & L-600 MODEL CLUTCHES - APPROXIMATE DIMENSIONS (INCHES)

Pilot Mount

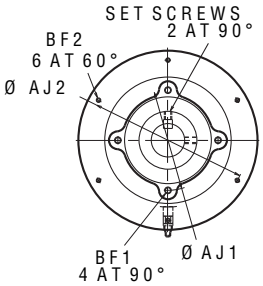

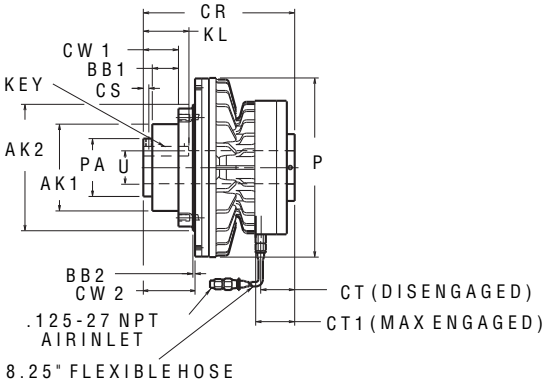

MODEL	PRODUCT NUMBER	AJ1	AJ2	AK1 ±.001	AK2 ±.001	BB1	BB2	BF1	BF2	CR	CS	CT	CT1	CW1	CW2	KL	KEY (SQ)	P	PA	SET SCREWS	U +.001 -.000
F-450	802850	3.000	4.000	2.498	3.498	0.60	0.19	.250-20	.190-24	4.75	0.25	1.33	1.42	1.04	1.23	1.062	0.188	4.56	1.38	.250-20	0.875
F-450	802855	3.000	4.000	2.498	3.498	0.60	0.19	.250-20	.190-24	4.75	0.25	1.33	1.42	1.04	1.23	1.062	0.188	4.56	1.38	.250-20	0.750
L-600	805270	3.500	5.500	2.998	4.498	0.62	0.07	.250-20	.190-24	5.56	0.25	1.79	1.94	1.23	1.55	1.37	0.250	6.06	1.84	.312-18	1.125
L-600	805275	3.500	5.500	2.998	4.498	0.62	0.07	.250-20	.190-24	5.56	0.25	1.79	1.94	1.23	1.55	1.37	0.250	6.06	1.84	.312-18	1.000

Pilot Mount w/Coupling Half

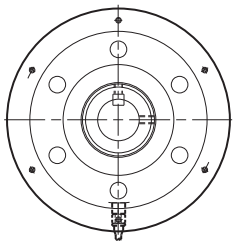

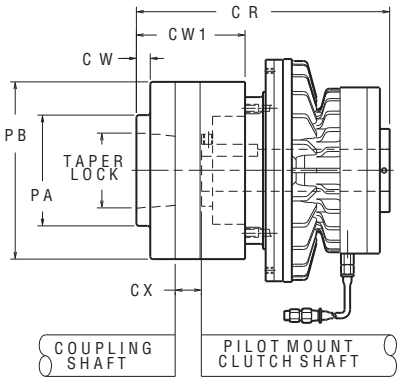

MODEL	COUPLING PRODUCT NUMBER	CR	CW	CW1	CX	PA	PB	DODGE TAPER LOCK®
F-450	802700	6.45	0.12	2.75	0.70	2.62	3.50	#1008
L-600	804900	7.70	0.94	3.37	0.64	2.62	4.38	#1215

Sheave Mount

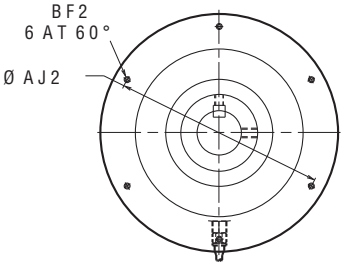

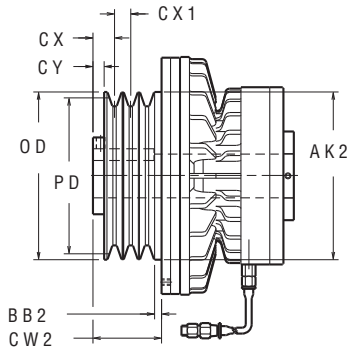

MODEL	PRODUCT NUMBER	SHEAVE BELT	SHEAVE G'VE	OD	PD	AJ2	AK2 ±.001	BB2	BF2	CW2	CX	CX1	CY
F-450	802810	"3V"	1	3.35	--	4.000	3.498	0.06	.190-24	1.22	0.75	--	0.44
F-450	802820	"3V"	1	4.50	--	--	--	--	--	--	0.88	--	0.44
F-450	802830	"A"	1	4.05	3.80	--	--	--	--	--	0.88	--	0.44
F-450	802840	"A"	1	4.65	4.40	--	--	--	--	--	0.88	--	0.44
L-600	805210	"3V"	2	4.50	--	5.500	4.498	0.29	.190-24	1.55	0.68	0.41	0.43
L-600	805220	"3V"	2	5.30	--	--	--	--	--	--	0.86	0.41	0.55
L-600	805230	"3V"	2	6.00	--	--	--	--	--	--	0.86	0.41	0.55
L-600	805240	"3V"	2	8.00	--	--	--	--	--	--	0.86	0.41	0.55
L-600	805250	"A"	2	4.65	4.40	--	--	--	--	--	0.62	0.63	0.24
L-600	805260	"A"	2	5.65	5.40	--	--	--	--	--	0.62	0.63	0.24

FRICTION CLUTCH MODELS M-800 & H-1000

- Static Torque capacity up to:
  M-800/975 In. Lbs. @ 80 psi
  H-1000/2800 In. Lbs. @ 80 psi
- Maximum Operating Speed up to 1800 rpm
- Transmitted Horsepower values from:
  M-800/0.50 to 10.00
  H-1000/1.00 to 25.00
- Thermal Horsepower rating of:
  M-800/1.00 @ 1800 rpm
  H-1000/2.25 @ 1800 rpm
- Heat Sink capacity of:
  M-800/110,000 Ft. Lbs.
  H-1000/230,000 Ft. Lbs.

6 M-800 & 6 H-1000 Models offer design flexibility:

- **Sheave Mount Units:**
  M-800/2 sizes of 3-"3V" and 2 sizes of 2-"B" Groove styles.
  H-1000/2 sizes of 3-"5V" and 2 sizes of 2-"B"
- **2 Pilot Mount** units with different standard bore sizes
- **Standard Bore Sizes:**
  M-800/1.438 and 1.625 inches
  H-1000/1.688 and 1.875 inches
- Customize the bore to your shaft diameter with a **Bushing** or **Coupling Half**
- **Includes:**
  M-800/8.25 in. hose.
  H-1000/8.25 inch hose.

Pulleys, Sprockets and Gears

These can be attached to the clutch for offset shaft applications. Tapped holes are provided for ease of mounting. Nexen does not furnish these items. For minimum sprocket requirements, see page 369.

M-800 & H-1000 Model Clutches

Model	Clutch Style	Product Number	Sheave Diameter	Bore (In)	Key Size (sq)	Shipping Wt. (Lbs)
M-800	Pilot Mount	807650	--	1.625	0.375	38
M-800	Pilot Mount	807655	--	1.438	0.375	38
M-800	Sheave Mount, 3-"3V"	807610	5.30 OD	1.625	0.375	37
M-800	Sheave Mount, 3-"3V"	807620	6.00 OD	1.625	0.375	40
M-800	Sheave Mount, 2-"B"	807630	5.80 PD	1.625	0.375	39
M-800	Sheave Mount, 2-"B"	807640	6.80 PD	1.625	0.375	43
H-1000	Pilot Mount	810050	--	1.875	0.500	61
H-1000	Pilot Mount	810055	--	1.688	0.375	63
H-1000	Sheave Mount, 3-"5V"	810010	7.10 OD	1.875	0.500	69
H-1000	Sheave Mount, 3-"5V"	810020	8.00 OD	1.875	0.500	74
H-1000	Sheave Mount, 3-"B"	810030	7.40 PD	1.875	0.500	72
H-1000	Sheave Mount, 3-"B"	810040	8.60 PD	1.875	0.500	82
Both	Pilot w/Coupling Half	Select a Pilot Mount and a Coupling Half to achieve this style of mount.				

For Inertia Values of components, see page 359. Keys are included. Required shaft insertion into clutch hub = minimum of M-800/3.75inches, H-1000/4.00 inches from Pilot side.

Bushing Options

(for 1.625 & 1.875 bore clutches only)

Bushings fit within the bore of the existing clutch, reducing the bore to the amount indicated.

Bore Size	Product Number	Reduces Clutch Bore Size to (In)	Shipping Wt. (Lbs)
1.625	806700	1.000	2
1.625	806800	1.125	2
1.625	806900	1.188	2
1.625	807000	1.250	2
1.625	807100	1.375	2
1.625	807200	1.438	2
1.625	807300	1.500	2
1.625	807500	No Bore/Customer machines	2
1.875	805600	1.000	2
1.875	809200	1.375	2
1.875	809300	1.438	2
1.875	809400	1.500	2
1.875	809500	1.625	2
1.875	809600	1.750	2
1.875	809900	No Bore/Customer machines	2

Coupling Half Options,

see page 367 for coupling specifications

A Coupling Half is used for in-line applications. To achieve a Pilot Mount with Coupling Half mounting configuration:

1. Select a Pilot Mount Clutch;
2. Order Clutch and Coupling Half separately.
3. Coupling Half is less taper lock bushing. Use Dodge Taper Lock® #2517 (1.000 to 2.500 inch bore range). Customer furnished.

Model	Product Number	Maximum Bore Size (In)	Shipping Wt. (Lbs)
M-800	807400	2.500	25
H-1000	809700	2.500	33

4. Select a Shaft Extension when the driving shaft is smaller in diameter and shorter than the length of the clutch. The Shaft Extension is the same length as the clutch and engages with the key on the pilot end. Extensions fit the driving shaft diameter.

Only for Bore Size	Product Number	Driving Shaft DIA.	Shipping Wt. (Lbs)
1.625	807600	0.750	4
1.625	807700	0.875	4
1.625	807800	0.938	4
1.625	807900	1.000	4
1.625	808000	1.125	4
1.625	808100	1.250	4
1.875	810000	1.000	6
1.875	810300	1.125	6
1.875	810400	1.250	6
1.875	810500	1.375	6
1.875	810600	1.500	6

Torque Vs. Air Pressure

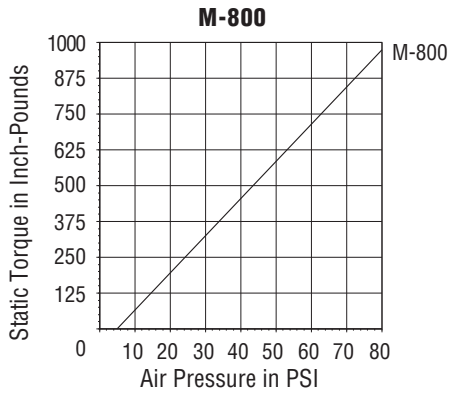

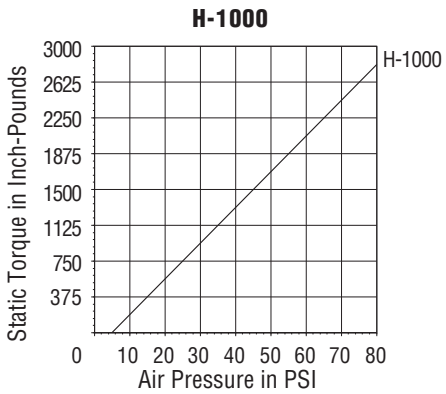

NOTE: Dynamic torque is approximately 85% of static torque.

M-800 & H-1000 MODEL CLUTCHES - APPROXIMATE DIMENSIONS (INCHES)

Pilot Mount

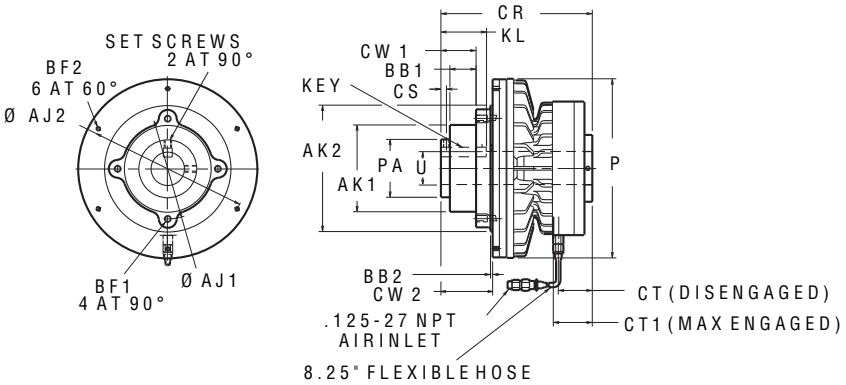

MODEL	PRODUCT NUMBER	AJ1	AJ2	AK1 ±.001	AK2 ±.001	BB1	BB2	BF1	BF2	CR	CS	CT	CT1	CW1	CW2	KL	KEY (SQ)	P	PA	SET SCREWS	U +.001 -.000
M-800	807650	4.750	6.500	3.999	5.498	0.77	0.67	.312-18	.250-20	7.31	0.38	1.62	1.71	1.62	2.31	1.69	0.375	8.06	2.63	.375-16	1.625
M-800	807655	4.750	6.500	3.999	5.498	0.77	0.67	.312-18	.250-20	7.31	0.38	1.62	1.71	1.62	2.31	1.69	0.375	8.06	2.63	.375-16	1.438
H-1000	810050	5.625	9.000	4.873	7.098	1.47	0.12	.375-16	.250-20	8.50	0.31	1.92	2.14	1.97	2.90	2.56	0.500	10.06	3.25	.375-16	1.875
H-1000	810055	5.625	9.000	4.873	7.098	1.47	0.12	.375-16	.250-20	8.50	0.31	1.92	2.14	1.97	2.90	2.56	0.375	10.06	3.25	.375-16	1.688

Pilot Mount w/Coupling Half

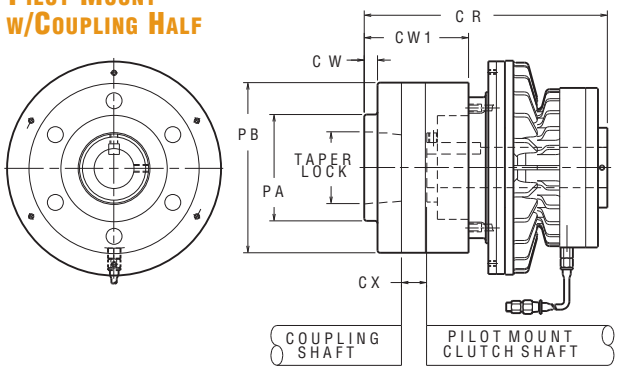

MODEL	COUPLING PRODUCT NUMBER	CR	CW	CW1	CX	PA	PB	DODGE TAPER LOCK®
M-800	807400	9.93	0.81	4.25	0.87	5.00	7.00	#2517
H-1000	809700	11.43	0.63	4.90	1.18	5.00	8.00	#2517

Sheave Mount

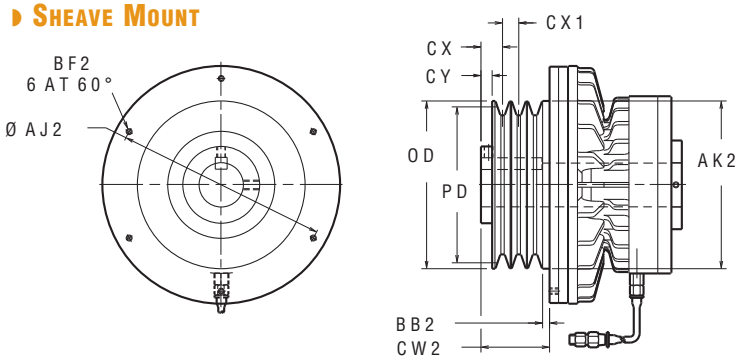

MODEL	PRODUCT NUMBER	SHEAVE BELT	SHEAVE G'VE	OD	PD	AJ2	AK2 ±.001	BB2	BF2	CW2	CX	CX1	CY
M-800	807610	"3V"	3	5.30	--	6.500	5.498	0.06	.250-20	2.30	0.96	0.41	0.68
M-800	807620	"3V"	3	6.00	--	--	--	--	--	--	0.96	0.41	0.68
M-800	807630	"B"	2	6.15	5.80	--	--	--	--	--	1.18	0.75	0.68
M-800	807640	"B"	2	7.15	6.80	--	--	--	--	--	1.18	0.75	0.68
H-1000	810010	"5V"	3	7.10	--	9.000	7.098	0.29	.250-20	2.90	0.91	0.69	0.47
H-1000	810020	"5V"	3	8.00	--	--	--	--	--	--	1.03	0.69	0.50
H-1000	810030	"B"	3	7.75	7.40	--	--	--	--	--	1.03	0.75	0.50
H-1000	810040	"B"	3	8.95	8.60	--	--	--	--	--	1.03	0.75	0.50

METRIC SERIES FRICTION CLUTCHES

The Metric Model Friction Clutch Series provides:

- Static Torque capacity up to 330 Nm
- Maximum Operating Speed up to 3600 rpm
- Heat Sink capacity of 312,000 Joules.

This clutch comes in **5 Models** for design flexibility:

- **6 Pilot Mount** units with different standard bore sizes
- **6 Standard Bore** sizes ranging from 15 to 50 millimeters
- **4 Minimum Bore** sizes ranging from 0 to 19 millimeters–you machine and assemble
- **BW** is equipped with Thrust Bearings and a Single Key Splined Hub.
- **B-275** is equipped with Sealed, Radial Bearings and a Multi-tooth, Involute Spline.

Metric Series Friction Clutches, Pilot Mount Only

Standard Bore Clutch:

Model	Product Number	Speeds Up to RPM	Bore (mm)	Key Size	MIN. Shaft Insertion into Hub from Pilot Side	Heat Sink Capacity (Joules)	Shipping Wt. (kg)
BW	950700	3600	15	5 x 5	38	7660	1,8
B-275	950705	3600	15	5 x 5	38	7660	1,8
F-450	950050	3600	20	6 x 6	51	41000	4,7
L-600	950150	3600	25	7 x 8	64	81000	7,8
M-800	950250	1800	40	8 x 12	95	149000	17
H-1000	950350	1800	50	9 x 14	102	312000	28

Keys are included.

Minimum Bore Clutch:

Minimum bore clutches are supplied unassembled with machinable hubs.

Model	Product Number	Speeds up to RPM	MIN. Bore (mm)	MIN. Shaft Insertion into Hub from Pilot Side	Heat Sink Capacity (Joules)	Shipping Wt. (kg)
F-450	950061	3600	0	51	41000	4,7
L-600	950161	3600	13	64	81000	7,8
M-800	950261	1800	18	95	149000	17
H-1000	950361	1800	19	102	312000	28

Torque Vs. Air Pressure

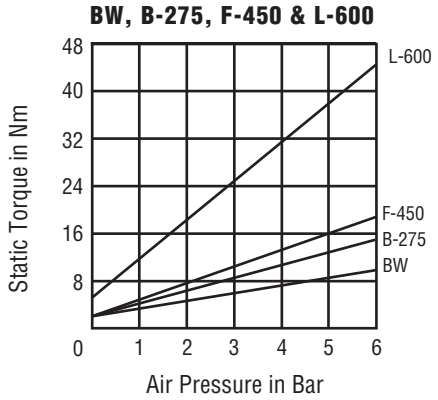

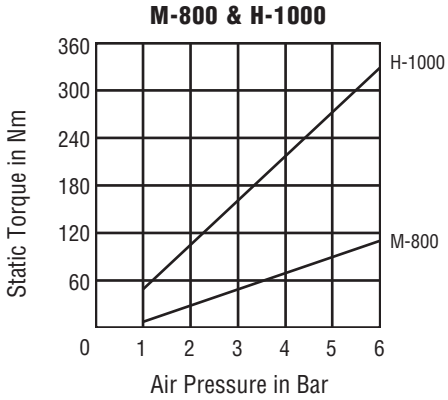

Torque (In. Lbs.) = Nm x 8.849
PSI = Bar ÷ .0689

BW, B-275 PILOT MOUNT - APPROXIMATE DIMENSIONS (MILLIMETERS)

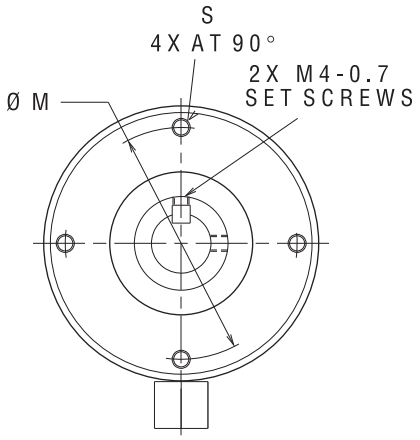

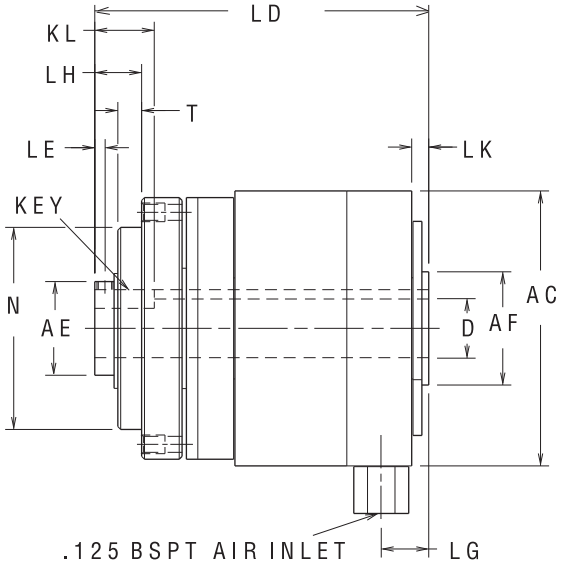

PRODUCT NUMBER	AC	AE	AF	D H7	KEY (SQ)	KL	LD	LE	LG	LH	LK	M	S	T	Nh8
950700	73	25	30	15	5	16	89	3	13	13	5	63	M5	6	54
950705	73	25	30	15	5	16	89	3	13	13	5	63	M5	6	54

F-450, L600, M-800 & H-1000 PILOT MOUNT - APPROXIMATE DIMENSIONS (MILLIMETERS)

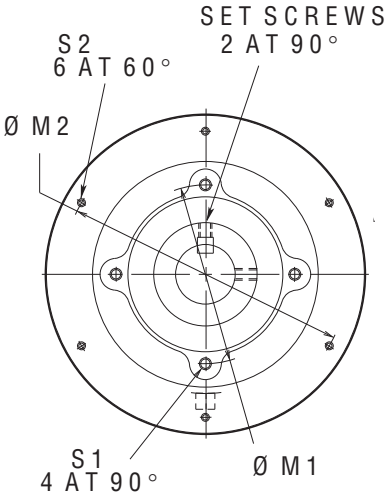

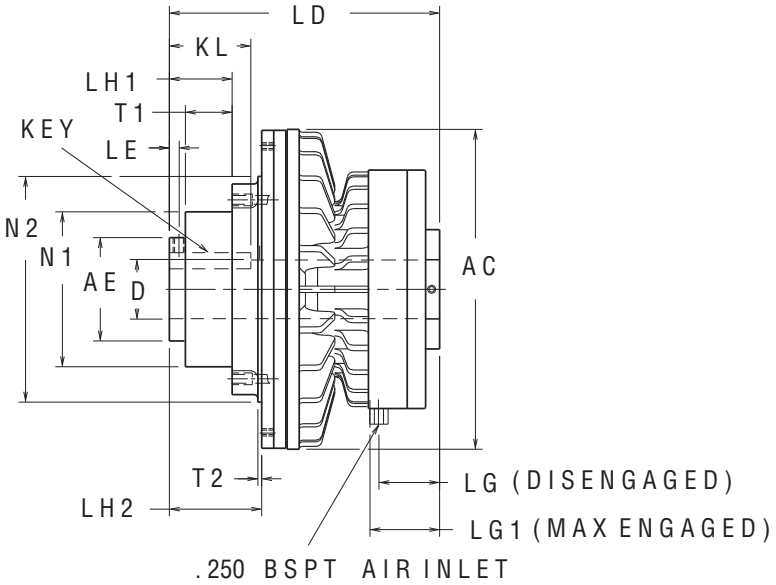

MODEL	PRODUCT NUMBER	AC	AE	D H7	KEY	KL	LD	LE	LG	LG1	LH1	LH2	M1	M2	N1 h8	N2 h8	S1	S2	T1	T2	SET SCREWS
F-450	950050	116	35	20	6 SQ	27	121	6	34	36	26	31	78.00	101.60	62.00	88.87	M6	M5	15	5	M6
L-600	950150	154	47	25	8 x 7	35	141	6	41	43	31	39	90.00	139.70	75.00	114.27	M6	M5	16	2	M6
M-800	950250	205	67	40	12 x 8	43	186	10	46	50	42	58	120.00	165.10	100.00	139.67	M8	M6	19	16	M10
H-1000	950350	256	83	50	14 x 9	65	216	9	49	54	50	73	144.00	228.60	120.00	180.31	M10	M6	37	3	M10

NOTE: Drawings are expressed in third angle projection.

XHW, EXTRA HEAVY-WEIGHT MODEL FRICTION CLUTCH

The XHW Friction Clutch provides:

- Static Torque capacity up to 5000 In. Lbs. @ 80 psi
- Maximum Operating Speed up to 1200 rpm
- Transmitted Horsepower values from 5.00 to 50.00
- Thermal Horsepower rating of 2.25 @ 1200 rpm
- Heat Sink capacity of 200,000 Ft. Lbs.

2 Models offer design flexibility:

- **1 Sheave Mount** unit in a 5-"5V" Groove design
- **1 Pilot Mount** unit
- **Standard Bore** size of 2.375 inches
- Customize the bore to your shaft diameter with a **Bushing** or **Coupling Half**
- 8.25 inch hose included.

Torque Vs. Air Pressure

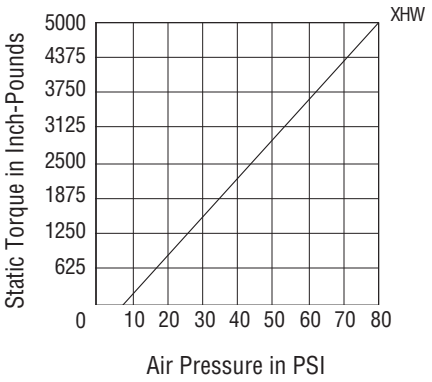

NOTE: Dynamic torque is approximately 85% of static torque.

XHW Model Clutch

Clutch Style	Product Number	Sheave Diameter	Bore (In)	Key Size (sq)	Shipping Wt. (Lbs)
Pilot Mount	811100	--	2.375	0.625	110
Sheave Mount, 5-"5V"	810900	8.00 OD	2.375	0.625	110
Pilot w/Coupling Half	Select a Pilot Mount and a Coupling Half to achieve this style of mount.				

For Inertia Values of components, see page 359.
Keys are included. Required shaft insertion into clutch hub = minimum of 5.625 inches from Pilot side.

Bushing Options (for 2.375 bore clutches only)

Bushings fit within the bore of the existing clutch, reducing it to the amount indicated.

Product Number	Reduces Clutch Bore Size to (In)	Shipping Wt. (Lbs)
811800	1.625	4
811900	1.688	4
811200	1.750	4
811300	1.875	4
811400	1.938	4
812200	2.125	4
811500	2.188	4
811600	2.250	4
812000	No Bore/Customer machines	4

Coupling Half Options, see page 367 for coupling specifications

A Coupling Half used for in-line applications. To achieve a Pilot Mount with Coupling Half mounting configuration:

1. Select a Pilot Mount Clutch from above;
2. Order Clutch and Coupling Half separately.
3. Coupling Half is less taper lock bushing. Use Dodge Taper Lock® #3030 (1.500–3.000 inch bore range). Customer furnished.

Product Number	Maximum Bore Size (In)	Shipping Wt. (Lbs)
811700	3.000	63

Pulleys, Sprockets and Gears

These can be attached to the clutch for offset shaft applications. Tapped holes are provided for ease of mounting. Nexen does not furnish these items.
For minimum sprocket requirements, see page 369.

XHW MODEL CLUTCH - APPROXIMATE DIMENSIONS (INCHES)

Pilot Mount

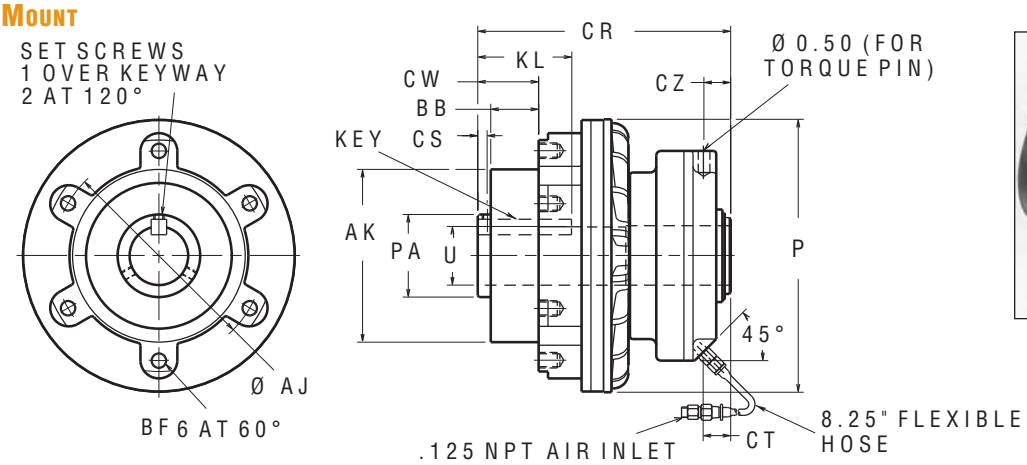

PRODUCT NUMBER	AJ	AK ±.001	BB	BF	CR	CS	CT	CW	CZ	KL	KEY (SQ)	P	PA	SET SCREWS	U +.001 -.000
811100	8.500	6.997	1.94	.625-11	10.25	0.38	1.12	2.47	1.09	3.81	0.625	11.06	3.35	.375-16	2.375

Pilot Mount w/Coupling Half

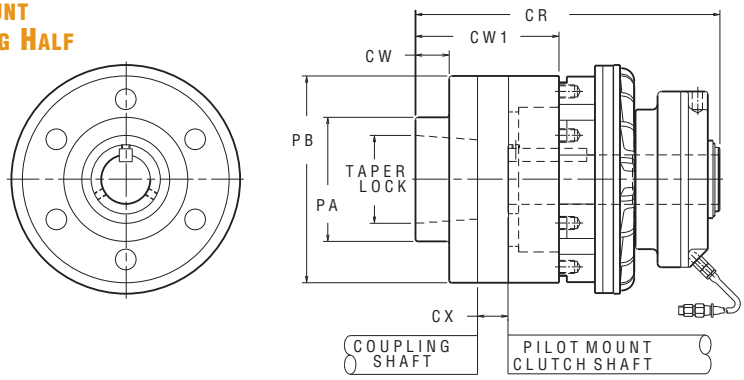

COUPLING PRODUCT NUMBER	CR	CW	CW1	CX	PA	PB	DODGE TAPER LOCK®
811700	14.72	1.63	6.69	1.47	6.00	10.00	#3030

Sheave Mount

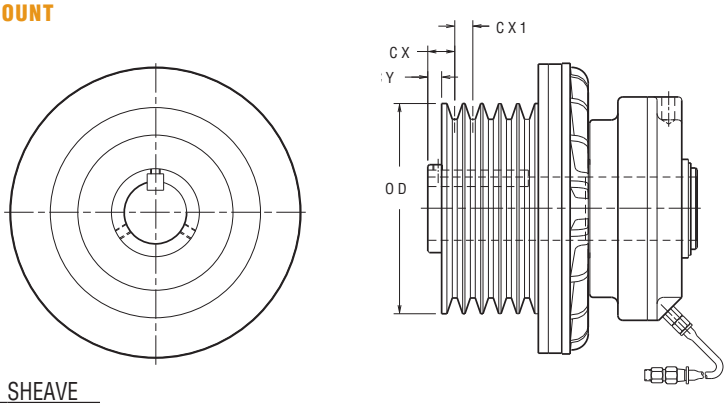

PRODUCT NUMBER	SHEAVE BELT	SHEAVE GROOVE	OD	CX	CX1	CY
810900	"5V"	5	8.00	1.03	0.69	0.53

FW, LW, MW & HW MODEL SERIES

The design of this Series Friction Clutches has been improved:

- The comparable replacement can be found in each table
- Accessories for FW, LW, MW & HW Friction Clutches can be found on the comparable Clutch catalog page.
- Torque values are the same as the replacement clutches.

FW, Fly-Weight Model Clutch Series

Product Number	Clutch Style	Sheave DIA	Bore (IN)	Shipping Wt. (Lbs)	Comparable Model	Comparable Product Number
802300	Pilot Mount	--	0.875	7	F-450	802850
802311	Pilot Mount	--	0.750	7	F-450	802855
801900	Sheave Mount, 1-"3V"	3.35 OD	0.875	7	F-450	802810
802200	Sheave Mount, 1-"3V"	4.50 OD	0.875	8	F-450	802820
802100	Sheave Mount, 1-"A"	3.80 PD	0.875	8	F-450	802830
--	Sheave Mount, 1-"A"	4.40 PD	0.875	--	F-450	802840

Required shaft insertion into clutch hub = minimum of 2.00 inches from Pilot side.

LW, Light-Weight Model Clutch Series

Product Number	Clutch Style	Sheave DIA	Bore (IN)	Shipping Wt. (Lbs)	Comparable Model	Comparable Product Number
804513	Pilot Mount	--	1.000	11	L-600	805275
804500	Pilot Mount	--	1.125	11	L-600	805270
803900	Sheave Mount, 2-"3V"	4.50 OD	1.125	13	L-600	805210
804000	Sheave Mount, 2-"3V"	5.30 OD	1.125	14	L-600	805220
--	Sheave Mount, 2-"3V"	6.00 OD	1.125	--	L-600	805230
--	Sheave Mount, 2-"3V"	8.00 OD	1.125	--	L-600	805240
804300	Sheave Mount, 2-"A"	4.40 PD	1.125	13	L-600	805250
--	Sheave Mount, 2-"A"	5.40 PD	1.125	--	L-600	805260

Required shaft insertion into clutch hub = minimum of 2.50 inches from Pilot side.

MW, Middle-Weight Model Clutch Series

Product Number	Clutch Style	Sheave DIA	Bore (IN)	Shipping Wt. (Lbs)	Comparable Model	Comparable Product Number
806600	Pilot Mount	--	1.625	26	M-800	807650
806612	Pilot Mount	--	1.437	26	M-800	807655
806100	Sheave Mount, 3-"3V"	5.30 OD	1.625	27	M-800	807610
--	Sheave Mount, 3-"3V"	6.00 OD	1.625	--	M-800	807620
806400	Sheave Mount, 2-"B"	5.80 PD	1.625	29	M-800	807630
--	Sheave Mount, 2-"B"	6.80 PD	1.625	--	M-800	807640

Required shaft insertion into clutch hub = minimum of 3.75 inches from Pilot side.

HW, Heavy-Weight Model Clutch Series

Product umber	Clutch Style	Sheave DIA	Bore (IN)	Shipping Wt. (Lbs)	Comparable Model	Comparable Product Number
809100	Pilot Mount	--	1.875	48	H-1000	810050
809111	Pilot Mount	--	1.687	48	H-1000	810055
808600	Sheave Mount, 3-"5V"	7.10 OD	1.875	55	H-1000	810010
--	Sheave Mount, 3-"5V"	8.00 OD	1.875	--	H-1000	810020
808900	Sheave Mount, 3-"B"	7.40 PD	1.875	60	H-1000	810030
--	Sheave Mount, 3-"B"	8.60 PD	1.875	--	H-1000	810040

Required shaft insertion into clutch hub = minimum of 4.00 inches from Pilot side.

DUAL PLATE FRICTION CLUTCH SELECTION CHART

Friction clutch recommendation is based upon air pressure of 50 psi, transmitted horsepower and speed.

RPM

TRANSMITTED HORSEPOWER	100	200	300	400	500	600	700	800	900	1000	1100	1200	1300	1400	1500	1600	1700	1800
5	DPC-9T	REFER TO FRICTION CLUTCH PRODUCTS ON PAGE 30 FOR SPECIFICATIONS IN THIS AREA OR HORSEPOWER RATINGS LESS THAN 5																
7½	DPC-11T	DPC-9T																
10	DPC-11T	DPC-9T																
15	DPC-13T	DPC-11T	DPC-9T	DPC-9T														
20	DPC-13T	DPC-11T	DPC-11T	DPC-9T	DPC-9T													
25	DPC-15T	DPC-13T	DPC-11T	DPC-11T	DPC-9T	DPC-9T	DPC-9T											
30	DPC-15T	DPC-13T	DPC-11T	DPC-11T	DPC-9T	DPC-9T	DPC-9T	DPC-9T	DPC-9T	DPC-9T	DPC-9T	DPC-9T	DPC-9T	DPC-9T	DPC-9T	DPC-9T	DPC-9T	DPC-9T
40	DPC-15T	DPC-13T	DPC-13T	DPC-11T	DPC-11T	DPC-11T	DPC-9T	DPC-9T	DPC-9T	DPC-9T	DPC-9T	DPC-9T	DPC-9T	DPC-9T	DPC-9T	DPC-9T	DPC-9T	DPC-9T
50		DPC-15T	DPC-13T	DPC-13T	DPC-11T	DPC-11T	DPC-11T	DPC-11T	DPC-9T	DPC-9T	DPC-9T	DPC-9T	DPC-9T	DPC-9T	DPC-9T	DPC-9T	DPC-9T	DPC-9T
75		DPC-15T	DPC-15T	DPC-13T	DPC-13T	DPC-13T	DPC-11T	DPC-11T	DPC-11T	DPC-11T	DPC-11T	DPC-11T	DPC-9T	DPC-9T	DPC-9T	DPC-9T	DPC-9T	DPC-9T
100			DPC-15T	DPC-15T	DPC-13T	DPC-13T	DPC-13T	DPC-11T	DPC-11T	DPC-11T	DPC-11T	DPC-11T	DPC-11T	DPC-11T	DPC-11T	DPC-11T	DPC-11T	DPC-9T
125				DPC-15T	DPC-15T	DPC-15T	DPC-13T	DPC-13T	DPC-13T	DPC-13T	DPC-11T	DPC-11T	DPC-11T	DPC-11T	DPC-11T	DPC-11T	DPC-11T	DPC-11T
150				DPC-15T	DPC-15T	DPC-15T	DPC-15T	DPC-13T	DPC-13T	DPC-13T	DPC-13T	DPC-13T	DPC-11T	DPC-11T	DPC-11T	DPC-11T	DPC-11T	DPC-11T

Important Notes:

1. For static torque ratings at different air pressures, refer to individual models to ensure conformity.
2. For operating speeds over 1800 rpm, refer to individual models or consult Nexen to ensure conformity.
3. Limited to peak thermal input rates of .9 HP_T per square inch of interface area.
4. Bars equal PSI x 0.0689.

DPC SERIES DUAL PLATE CLUTCHES

This Series, specified by component, allows you to custom design for specific application requirements:

- Static Torque capacity up to 36,000 In. Lbs. @ 80 psi
- Maximum Operating Speed up to 2200 rpm
- Thermal Horsepower values of 3.3 to 9.0 at rated speeds
- Components combine in a variety of options to fit almost any need
- Choose from Thru-Shaft or Shaft-End Mounting
- Choose between Sheave or Pilot style configurations
- Rotary Air Union is included with each Clutch Assembly.

With the DPC Model Series, tough applications are made easy. Each of the 4 Models and their many options are detailed on the next few pages.

The DPC Series Clutches are designed for applications involving high inertia starts and stops. The Peak Input Rate may be the limiting factor in high inertia starts or stops, even though the Heat Sink Capacity is sufficient. The Peak Input Rate capacity is the rate at which the clutch absorbs heat at the friction interface during the acceleration period, while the interfaces are slipping or until the load and clutch are operating at the same speed. See page 368 in the Engineering Data Section for information explaining how to calculate the Peak Input Rate and how to avoid potential problems.

How to Specify and Order DPC Clutches:

1. Determine if you require Shaft-End Mounting or Thru-Shaft Mounting;
2. Determine if you require a Pilot Mount or Sheave Mount configuration;
3. Determine which bore size you will need;
4. Order each component individually, based upon your requirements.

Motor Frame, Shaft Diameters & Lengths

This chart can be used for quick selection of many criteria.
If you are using a standard motor frame and are within the rpm and horsepower requirements, the chart indicates a clutch and shaft to use.
If you know the rpm, horsepower and desired clutch, the chart will indicate a standard motor frame and shaft to use.

HORSEPOWER	600RPM	900RPM	1200RPM	1800RPM
50	**DPC13T**	**DPC11T**	**DPC9T**	**DPC9T**
Motor Frame	445T	404T	365T	326T
Shaft DIA./LGTH	3.375 / 8.25	2.875 / 7.0	2.375 / 5.625	2.125 / 5.0
60	--	**DPC11T**	**DPC11T**	**DPC9T**
Motor Frame	--	405T	404T	364TS, 364T
Shaft DIA./LGTH	--	2.875 / 7.0	2.875 / 7.0	2.375 / 5.625
75	**DPC13T**	**DPC13T**	**DPC11T**	**DPC9T**
Motor Frame	D5005	444T	405T	365TS, 365T
Shaft DIA./LGTH	3.5/ 10.25	3.375 / 8.25	2.875 / 7.0	2.375 / 5.625
100	**DPC15T**	**DCP13T**	**DPC13T**	**DPC11T**
Motor Frame	D5008	445T	444T	405TS, 404T
Shaft DIA./LGTH	4.0 / 11.75	3.375 / 8.25	3.375 / 8.25	2.875 / 7.0
125	--	**DPC13T**	**DPC13T**	--
Motor Frame	--	D5005	444T	--
Shaft DIA./LGTH	--	3.5/ 10.25	3.375 / 8.25	--
150	--	**DPC15T**	**DPC13T**	--
Motor Frame	--	D5005	445T, D5005	--
Shaft DIA./LGTH	--	3.5/ 10.25	3.5/ 10.25	--

Clutch Application Data

MODEL	DPC-9T	DPC-11T
Peak Input Rate	50 hp	84 hp
Effective Friction Areas	55 in^2	93 in^2

MODEL	DPC-13T	DPC-15T
Peak Input Rate	131 hp	149 hp
Effective Friction Areas	145 in^2	166 in^2

Torque Vs. Air Pressure

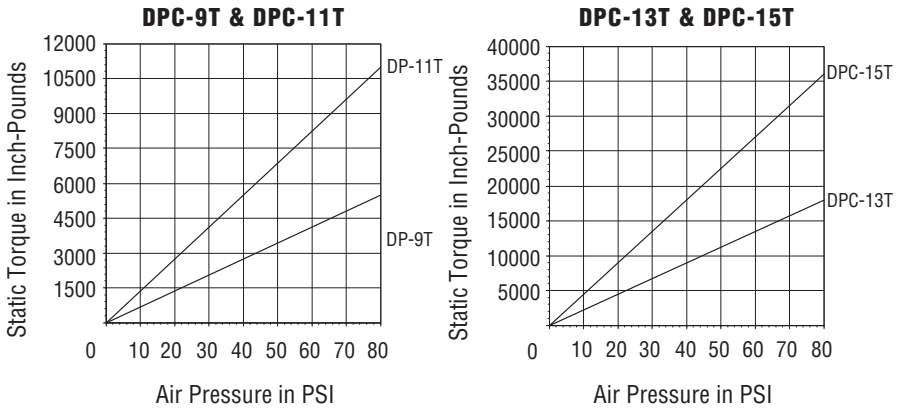

NOTE: Dynamic torque is approximately 85% of static torque.

Clutch Assembly

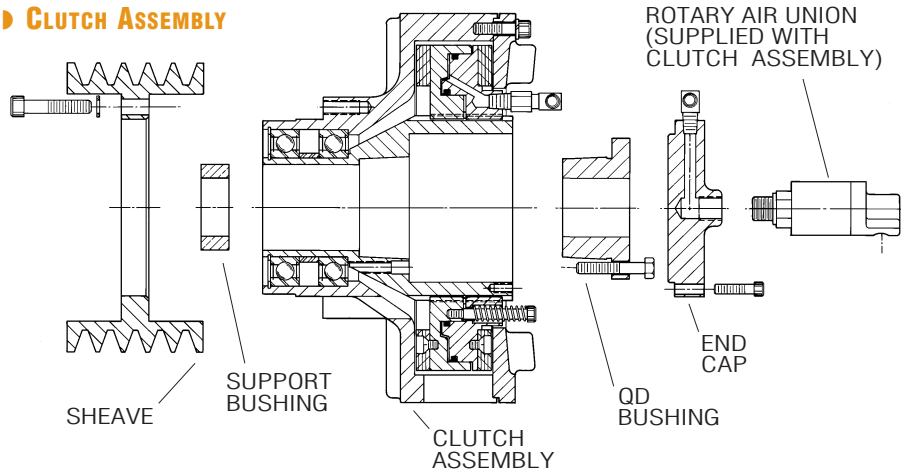

DPC Clutches

Shown are the typical components of a DPC Clutch:

- The Clutch Assembly comes with the Rotary Air Union
- Rotary Air Union, supplied with each clutch, is required for both Shaft-End and Thru Shaft mounting
- The optional End Cap is only required for Shaft-End Mounting
- The customer supplied QD Bushing is required for both Shaft-End and Thru-Shaft Mounting
- The Support Bushing is used whenever the shaft size is less than the maximum clutch bore.

Shaft-End Mounting

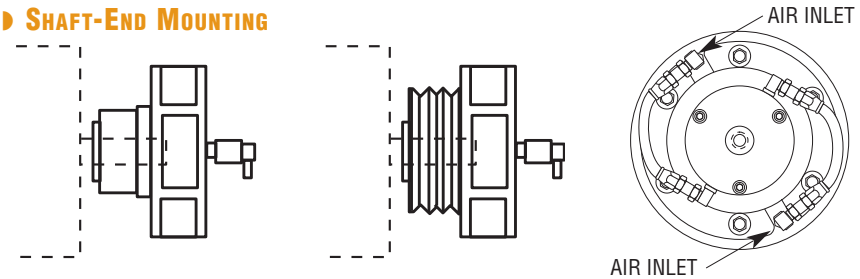

Mounting/Air Inlet Connections

DPC Clutches are very flexible units because of their many mounting possibilities. Four of the more common applications are shown at left. Also refer to the Air Inlet Connection information (at left) for each mounting style.

Air Inlet Connection:

1. Attach the End Cap to the end of the Hub with three cap screws.
2. Install the Rotary Air union and elbow fittings in the End Cap.
3. Connect the cylinder hoses to the elbow fittings.
4. Use the flexible hose (supplied) to connect air supply to the Rotary Air Union (do not use rigid pipe or tubing for this connection).
5. Make sure that of these hoses do not interfere with the rotating parts of the unit.

Thru-Shaft Mounting

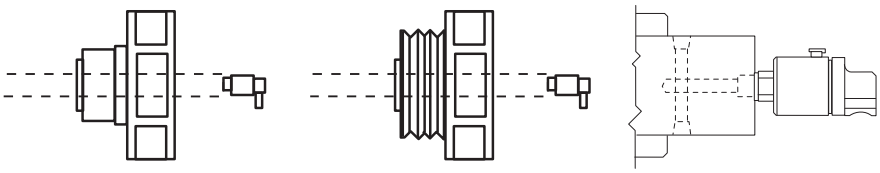

Air Inlet Connection:

1. Drill a 0.375 inch diameter hole in the center of the shaft, long enough to reach the air outlets.
2. Tap drill the air outlet holes straight through the shaft, intersecting the 0.375 diameter hole, and tap the 0.125-27 NPT on both ends.
3. The air outlet holes should be located 0.375 of an inch from the end of the Hub.
4. Tap a .625-18 inch hole, 0.625 inches deep in the end of the shaft for the Rotary Air Union.
5. Install the two elbow fittings in the air outlet holes and connect the cylinder hoses to them.
6. Install the Rotary Air Union in the end of the shaft and use the flexible hose (supplied) to connect the air supply to the shaft (do not use rigid pipe or tubing for this connection).

DPC-9T MODEL DUAL PLATE CLUTCH

This **Model**, specified by component, allows you to custom design for specific application requirements:

- Static Torque capacity up to 5500 In. Lbs. @ 80 psi
- Maximum Operating Speed up to 2200 rpm
- Thermal Horsepower ratings up to 3.3 @ 2200 rpm
- **Pilot Mount** clutch assembly with standard support bushing bore of 2.375 inches
- **Sheave** options: 5-"5V" or 4-"C" Groove
- Support Bushings provide 6 additional bore sizes ranging from 1.87 to 2.125 inches
- Heat Sink capacity of 220,000 Ft. Lbs.
- 8.25 inch hose included
- Rotary Air Union is supplied with the clutch assembly

Review the information on this and the next page to determine the required components to build your clutch.

REQUIRED COMPONENTS:

Shaft-End Mounting	Thru-Shaft Mounting
1 Clutch Assembly	1 Clutch Assembly
1 End Cap	1 QD Bushing
1 QD Bushing	

(QD Bushing customer furnished)

OPTIONAL COMPONENTS:

Shaft-End Mounting	Thru-Shaft Mounting
1 Support Bushing	1 Support Bushing
1 Sheave	1 Sheave

DPC-9T, Dual Plate Clutch

Clutch Component	Product Number	Support Bushing Bore (O.D.)(In)	Shaft Insertion MIN.	Shaft Insertion MAX.	Shipping Wt. (Lbs)
Shaft-End Mounting (1 of each required)					
Clutch Assembly	960200	2.375	4.69	6.57	64
End Cap	960700	--	--	--	3
QD Bushing	Customer Supplied	SK Bore Range = 0.500 - 2.375 inches			
Thru-Shaft Mounting (1 of each required)					
Clutch Assembly	960200	--	--	--	64
QD Bushing	Customer Supplied	SK Bore Range = 0.500 - 2.375 inches			

Support Bushing/Bore Options

Support Bushings are used to reduce the clutch bore for the driven shaft.

Clutch Component	Product Number	Reduce Bore Size to/ (In)	Shipping Wt. (Lbs)
Support Bushing	960419	1.187	1
Support Bushing	960423	1.437	1
Support Bushing	960427	1.687	1
Support Bushing	960430	1.875	1
Support Bushing	960431	1.937	1
Support Bushing	960434	2.125	1
Bushing-Blank/No Bore	960400	1.131 ID MIN.	1

Sheave Options

Clutch Component	Product Number	Type of Sheave Groove	Shaft Insertion MIN.	Shaft Insertion MAX.	Shipping Wt. (Lbs)
Sheave, "5V"	956700	8.0 OD, 5-"5V"	5.32	7.20	16
Sheave, "4C"	960600	9.0, OD, 4 "C"	5.51	7.39	22

Pulleys, Sprockets, Gears

These can be attached to the clutch for thru-shaft applications. Tapped holes are provided for ease of mounting. Nexen does not supply these items.

For minimum sprocket requirements, see page 369.

Torque Vs. Air Pressure

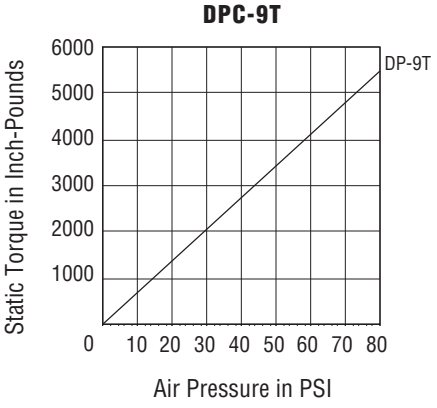

NOTE: Dynamic torque is approximately 85% of static torque.

DPC-9T, DUAL PLATE CLUTCH - APPROXIMATE DIMENSIONS (INCHES)

Pilot Mount

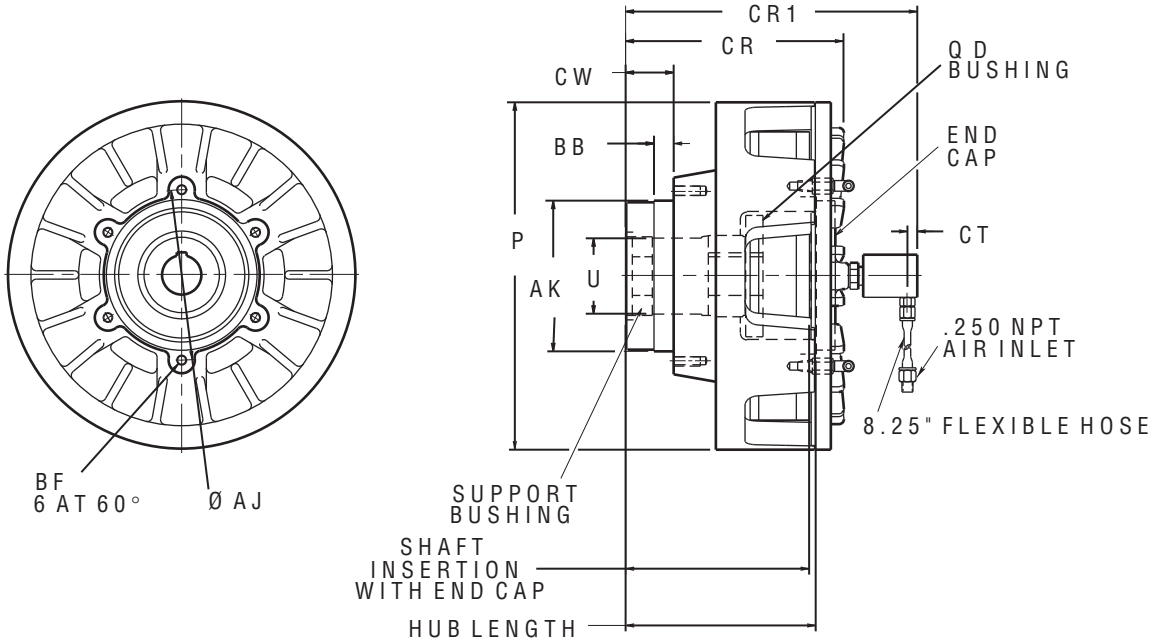

CLUTCH PRODUCT NUMBER	AJ	AK ±.001	BB	BF	CR	CR1	CT	CW	P	HUB LENGTH	SHAFT INSERTION MIN.	SHAFT INSERTION MAX.	U +.002 -.000
960200	5.562	4.874	0.75	.375-16	7.42	10.76	0.38	1.62	10.75	6.82	4.69	6.57	2.375

Sheave Mount; Clutch and Sheave Combined

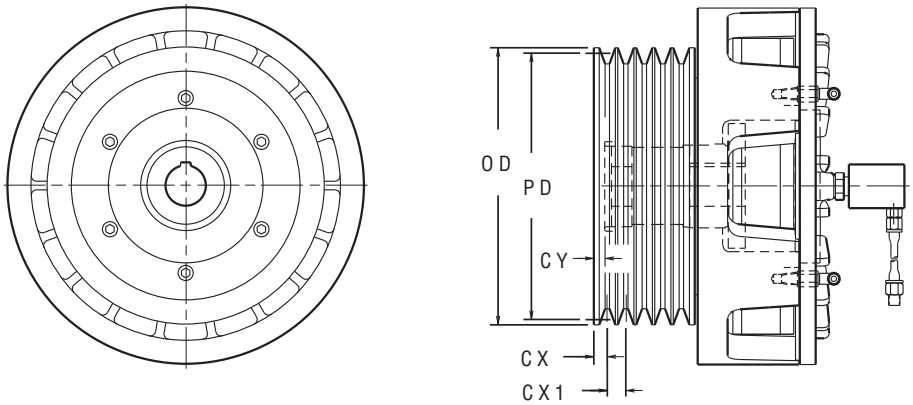

SHEAVE PRODUCT NUMBER	SHEAVE BELT	SHEAVE GROOVE	OD	PD	CX	CX1	CY
956700	"5V"	5	8.00	--	0.50	0.69	0.63
960600	"C"	4	9.00	8.60	0.56	1.00	0.82

DPC-11T MODEL DUAL PLATE CLUTCH

This **Model**, specified by component, allows you to custom design for specific application requirements:

- Static Torque capacity up to 11,000 In. Lbs. @ 80 psi
- Maximum Operating Speed up to 1800 rpm
- Thermal Horsepower ratings up to 5.5 @ 1800 rpm
- **Pilot Mount** clutch assembly with standard support bushing bore of 2.875 inches
- **Sheave Mount** option in the 5-"5V" Groove design
- Support Bushings provide 7 additional bore sizes ranging from 1.188 to 2.500 inches
- Heat Sink capacity of 360,000 Ft. Lbs.
- Rotary Air Union is supplied with the clutch assembly
- 8.25 inch hose included.

Review the information on this and the next page to determine the required components to build your clutch.

REQUIRED COMPONENTS:

Shaft-End Mounting	Thru-Shaft Mounting
1 Clutch Assembly	1 Clutch Assembly
1 End Cap	1 QD Bushing
1 QD Bushing	

(QD Bushing customer furnished)

OPTIONAL COMPONENTS:

Shaft-End Mounting	Thru-Shaft Mounting
1 Support Bushing	1 Support Bushing
1 Sheave	1 Sheave

DPC-11T, Dual Plate Clutch

Clutch Component	Product Number	Support Bushing Bore (O.D.) (In)	Shaft Insertion MIN.	Shaft Insertion MAX.	Shipping Wt. (Lbs)
Shaft -End Mounting (1 of each required)					
Clutch Assembly	961200	2.875	5.16	7.00	100
End Cap	961700	--	--	--	3
QD Bushing	Customer Supplied	SF Bore Range = 1.500 - 2.875 inches			
Thru-Shaft Mounting (1 of each required)					
Clutch Assembly	961200	--	--	--	100
QD Bushing	Customer Supplied	SF Bore Range = 1.500 - 2.875 inches			

Support Bushing/ Bore Options

Support Bushings are used to reduce the clutch bore.

Clutch Component	Product Number	Reduce Bore Size to: (In)	Shipping Wt. (Lbs)
Support Bushing	961430	1.875	2
Support Bushing	961431	1.938	2
Support Bushing	961434	2.125	2
Support Bushing	961435	2.188	2
Support Bushing	961438	2.375	2
Support Bushing	961439	2.438	2
Support Bushing	961440	2.500	2
Bushing-Blank/No Bore	961400	1.375 ID MIN.	2

Sheave Options

Clutch Component	Product Number	Type of Sheave Groove	Shaft Insertion MIN.	Shaft Insertion MAX.	Shipping Wt. (Lbs)
Sheave, "5V"	961600	10.3 OD, 5-"5V"	5.58	7.42	25

Pulleys, Sprockets, Gears

These can be attached to the clutch for thru-shaft applications. Tapped holes are provided for ease of mounting. Nexen does not supply these items.

For minimum sprocket requirements, see page 369.

Torque Vs. Air Pressure

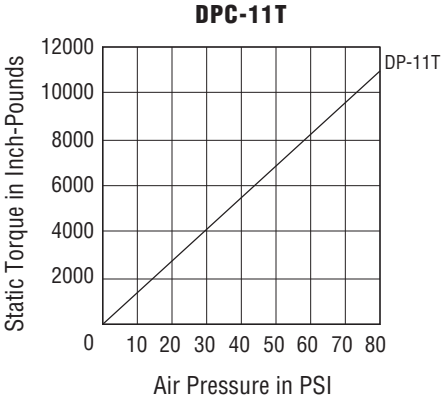

NOTE: Dynamic torque is approximately 85% of static torque.

DPC-11T, DUAL PLATE CLUTCH - APPROXIMATE DIMENSIONS (INCHES)

Pilot Mount

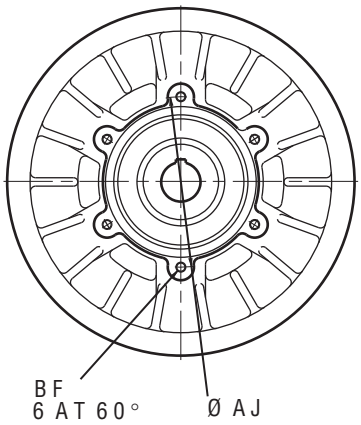

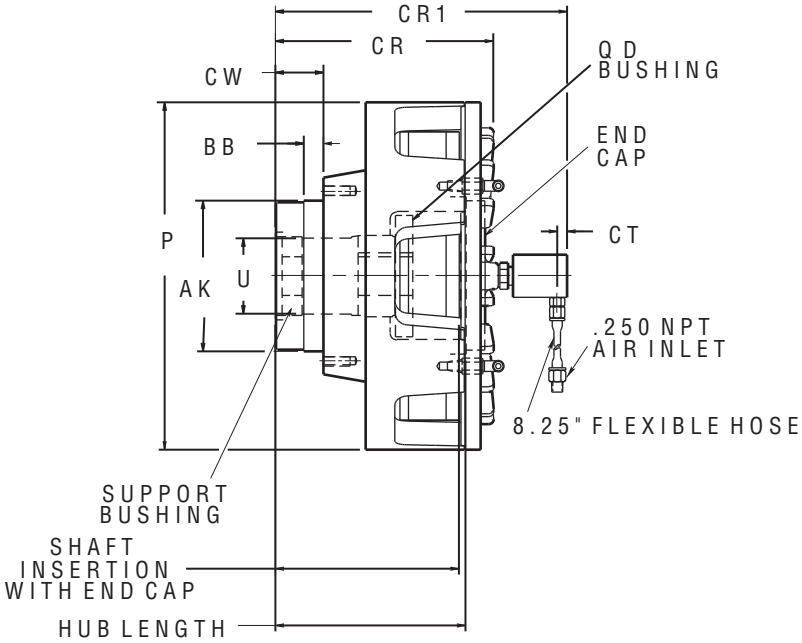

CLUTCH PRODUCT NUMBER	AJ	AK ±.001	BB	BF	CR	CR1	CT	CW	P	HUB LENGTH	SHAFT INSERTION MIN.	SHAFT INSERTION MAX.	U +.002 -.000
961200	6.500	5.748	0.75	.375-16	8.31	11.12	0.38	1.83	13.25	7.25	5.16	7.00	2.875

Sheave Mount; Clutch and Sheave Combined

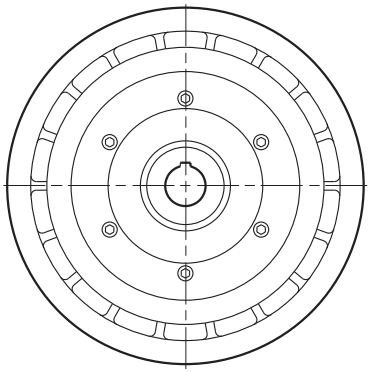

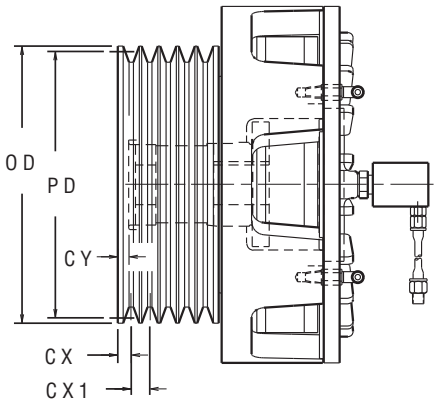

SHEAVE PRODUCT NUMBER	SHEAVE BELT	SHEAVE GROOVE	OD	PD	CX	CX1	CY
961600	"5V"	5	10.30	--	0.50	0.69	0.42

DPC-13T MODEL DUAL PLATE CLUTCH

This **Model**, specified by component, allows you to custom design tor specific application requirements:

- Static Torque capacity up to 18,000 In. Lbs. @ 80 psi
- Maximum Operating Speed up to 1200 rpm
- Thermal Horsepower ratings up to 8.0 @ 1200 rpm
- **Pilot Mount** clutch assembly wth standard support bushing bore of 3.500 inches
- **Sheave Mount** option in the 4-"8V" Groove design
- Support Bushings provide 3 additional bore sizes ranging from 2.938 to 3.438 inches
- Heat Sink capacity of 690,000 Ft. Lbs.
- Rotary Air Union is supplied with the clutch assembly
- 8.25 inch hose included.

Review the information on this and the next page to determine the required components to build your clutch.

REQUIRED COMPONENTS:

Shaft-End Mounting	Thru-Shaft Mounting
1 Clutch Assembly	1 Clutch Assembly
1 End Cap	1 QD Bushing
1 QD Bushing	

(QD Bushing customer furnished)

OPTIONAL COMPONENTS:

Shaft-End Mounting	Thru-Shaft Mounting
1 Support Bushing	1 Support Bushing
1 Sheave	1 Sheave

DPC-13T, Dual Plate Clutch

Clutch Component	Product Number	Support Bushing Bore (O.D.) (In)	Shaft Insertion MIN.	Shaft Insertion MAX.	Shipping Wt. (Lbs)
Shaft-End Mounting (1 of each required)					
Clutch Assembly	962200	3.500	7.00	9.25	200
End Cap	962700	--	--	--	7
QD Bushing	Customer Supplied	F Bore Range = 2.00 - 3.50 inches			
Thru-Shaft Mounting (1 of each required)					
Clutch Assembly	962200	--	--	--	200
QD Bushing	Customer Supplied	F Bore Range = 2.00 - 3.50 inches			

Support Bushing/Bore Options

Support Bushings are used to reduce the clutch bore.

Clutch Component	Product Number	Reduce Bore Size to/ (In)	Shipping Wt. (Lbs)
Support Bushing	962447	2.938	2
Support Bushing	962454	3.375	2
Support Bushing	962455	3.438	2
Bushing-Blank/No Bore	962400	2.25 ID MIN.	2

Sheave Options

Clutch Component	Product Number	Type of Sheave Groove	Shaft Insertion MIN.	Shaft Insertion MAX.	Shipping Wt. (Lbs)
Sheave, "8V"	962600	15.0 OD, 4-"8V"	7.94	9.94	75

Pulleys, Sprockets, Gears

These can be attached to the clutch for thru-shaft applications. Tapped holes are provided for ease of mounting. Nexen does not supply these items.

For minimum sprocket requirements, see page 369.

Torque Vs. Air Pressure

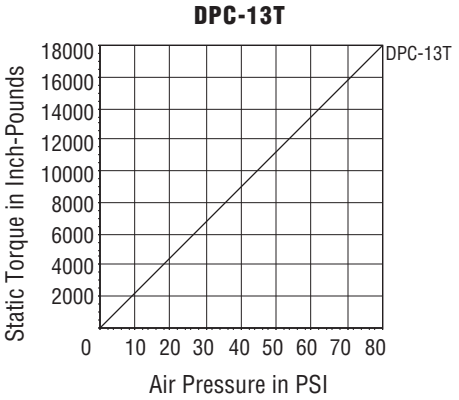

NOTE: Dynamic torque is approximately 85% of static torque.

DPC-13T, DUAL PLATE CLUTCH - APPROXIMATE DIMENSIONS (INCHES)

Pilot Mount

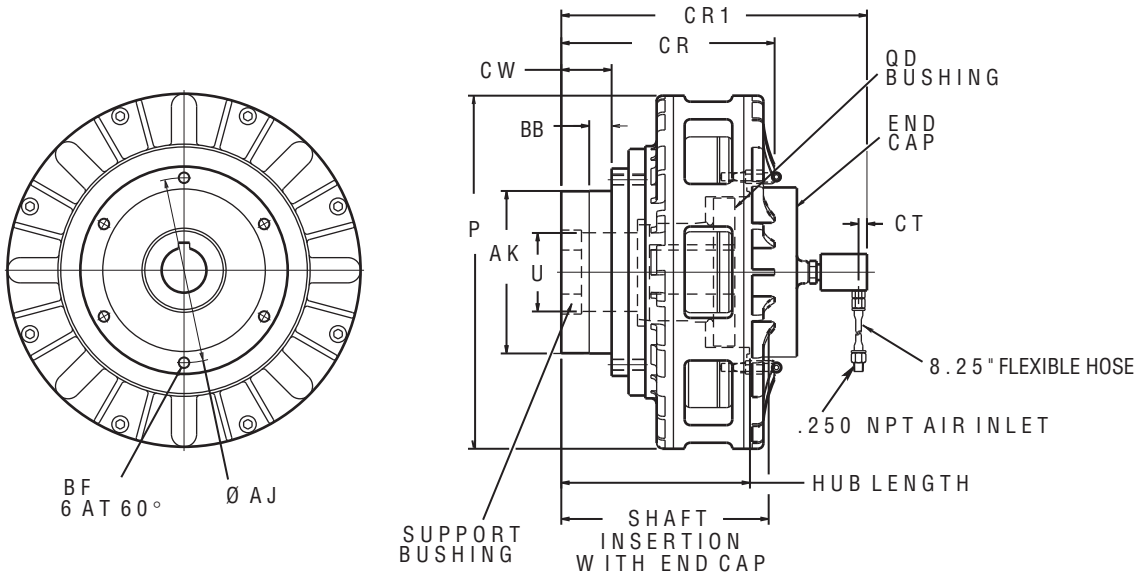

CLUTCH PRODUCT NUMBER	AJ	AK ±.001	BB	BF	CR	CR1	CT	CW	P	HUB LENGTH	SHAFT INSERTION MIN.	SHAFT INSERTION MAX.	U +.002 -.000
962200	8.250	7.248	1.00	.500-13	9.52	13.63	0.38	2.24	15.75	8.42	7.25	9.25	3.500

Sheave Mount; Clutch and Sheave Combined

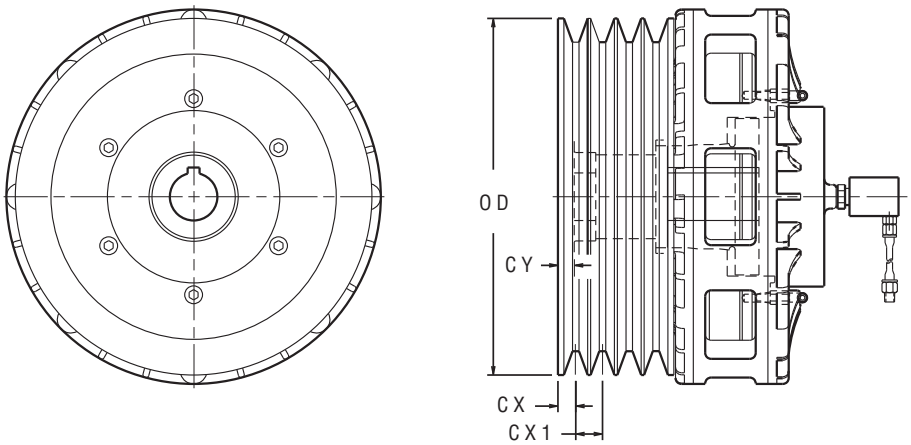

SHEAVE PRODUCT NUMBER	SHEAVE BELT	SHEAVE GROOVE	OD	CX	CX1	CY
962600	"8V"	4	15.00	0.75	1.13	0.69

DPC-15T MODEL DUAL PLATE CLUTCH

This **Model**, specified by component, allows you to custom design for specific application requirements:

- Static Torque capacity up to 36,000 In. Lbs. @ 80 psi
- Maximum Operating Speed up to 900 rpm
- Thermal Horsepower ratings up to 9.0 @ 900 rpm
- **Pilot Mount** clutch assembly with standard support bushing bore of 4.000 inches
- **Sheave Mount** option in the 4-"8V" Groove design
- Support Bushings provide 2 additional bore sizes ranging from 3.500 to 3.938 inches
- Heat Sink capacity of 820,000 Ft. Lbs.
- Rotary Air Union is supplied with the clutch assembly
- 8.25 inch hose included.

Review the information on this and the next page to determine the required components to build your clutch.

REQUIRED COMPONENTS:

Shaft-End Mounting	Thru-Shaft Mounting
1 Clutch Assembly	1 Clutch Assembly
1 End Cap	1 QD Bushing
1 QD Bushing	

(QD Bushing customer furnished)

OPTIONAL COMPONENTS:

Shaft-End Mounting	Thru-Shaft Mounting
1 Support Bushing	1 Support Bushing
1 Sheave	1 Sheave

DPC-15T, Dual Plate Clutch

Clutch Component	Product Number	Support Bushing Bore (O.D.) (In)	Shaft Insertion MIN.	Shaft Insertion MAX.	Shipping Wt. (Lbs)
Shaft-End Mounting (1 of each required)					
Clutch Assembly	963200	4.000	7.00	9.50	254
End Cap	963700	--	--	--	8
QD Bushing	Customer Supplied	J Bore Range = 2.125- 4.000 inches			
Thru-Shaft Mounting (1 of each required)					
Clutch Assembly	963200	--	--	--	254
QD Bushing	Customer Supplied	J Bore Range = 2.125-4.000 inches			

Support Bushing/Bore Options

Support Bushings are used to reduce the clutch bore.

Clutch Component	Product Number	Reduce Bore Size to/ (In)	Shipping Wt. (Lbs)
Support Bushing	963456	3.500	2
Support Bushing	963463	3.938	2
Bushing-Blank/No Bore	963400	3.00 ID MIN.	2

Sheave Options

Clutch Component	Product Number	Type of Sheave Groove	Shaft Insertion MIN.	Shaft Insertion MAX.	Shipping Wt. (Lbs)
Sheave, "8V"	963600	18.0 OD, 4-"8V"	8.720	10.220	100

Pulleys, Sprockets, Gears

These can be attached to the clutch for thru-shaft applications. Tapped holes are provided for ease of mounting. Nexen does not supply these items.

For minimum sprocket requirements, see page 369.

Torque Vs. Air Pressure

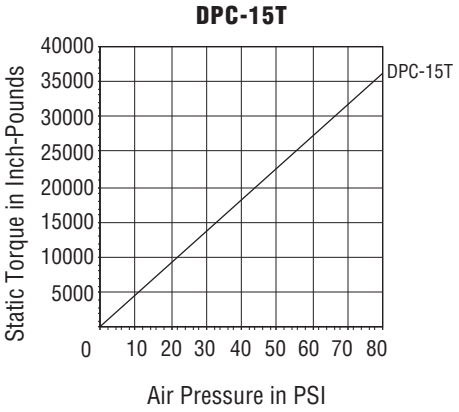

NOTE: Dynamic torque is approximately 85% of static torque.

DPC-15T, DUAL PLATE CLUTCH - APPROXIMATE DIMENSIONS (INCHES)

Pilot Mount

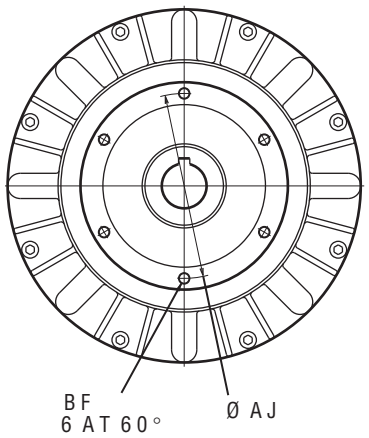

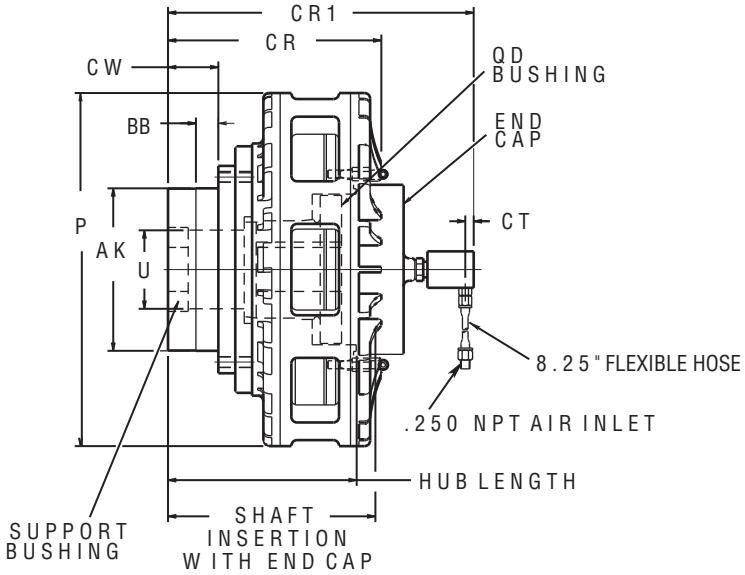

CLUTCH PRODUCT NUMBER	AJ	AK ±.001	BB	BF	CR	CR1	CT	CW	P	HUB LENGTH	SHAFT INSERTION MIN.	SHAFT INSERTION MAX.	U +.002 -.000
963200	9.000	7.998	1.00	.500-13	9.61	13.72	0.38	2.21	18.00	8.13	7.81	9.38	4.000

Sheave Mount; Clutch and Sheave Combined

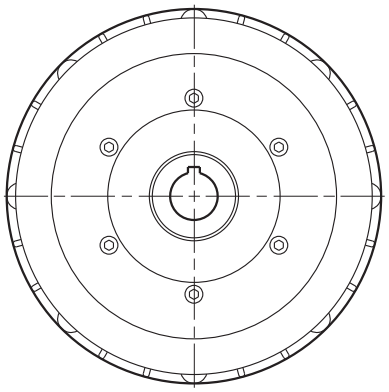

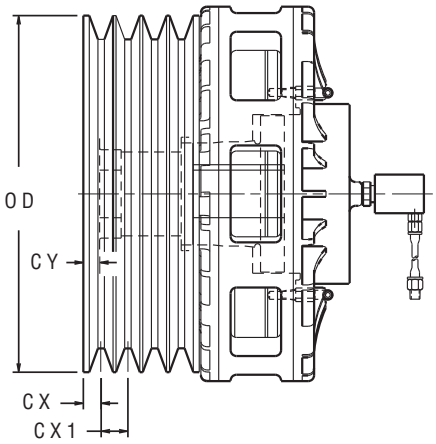

SHEAVE PRODUCT NUMBER	SHEAVE BELT	SHEAVE GROOVE	OD	CX	CX1	CY
963600	"8V"	4	18.00	0.75	1.13	0.72

DUAL-FACED FRICTION CLUTCH MODELS DFC-1650 & DFC-2200

The DFC-1650 and DFC-2200 are two models of self contained, dual-faced, air-engaged friction clutches with a bearing mounted plate for mounting pulleys or sprockets. The two models sizes fit shafts up to 3.375", and are designed for shaft-end mounts only.

The DFC Clutches operate with an air-pressurized piston moving axially to compress the friction facing against the inside of a dual-faced rotor, which is splined to a shaft-mounted hub. The rotor is locked with the pilot plate, under friction, to transmit power from the driving shaft to the driven pulley or sprocket.

- Static Torque capacity up to 66,800 In. Lbs. @ 80 psi
- Maximum Operating Speed up to 1200 rpm
- Thermal Horsepower rating of 10.0 @ 900 rpm
- Heat Sink capacity of 1,460,000 Ft. Lbs.

This clutch is shaft-end mounted to provide design versatility in **2 Models**:

- **8 Sheaves** provide 4-"5V" or 4-"8V" Groove options
- **Standard Bore** size of 3.375 inches
- Lower cost O-ring design
- Superior friction facing life
- Excellent bearing life
- Clutch envelope is within the motor diameter
- For up to 250 horsepower drives

DFC Model Clutches

Model	Clutch Style	Product Number	Sheave Diameter	Bore (In)	Shipping Wt. (Lbs)
DFC-1650	Pilot Mount	964149	--	3.375	350
DFC-2200	Pilot Mount	964151	--	3.375	500
DFC-1650	Sheave, 6-"5V"	964152	15.00 OD		
DFC-1650	Sheave, 5-"5V"	964153	15.00 OD		
DFC-1650	Sheave, 4-"5V"	964154	14.00 OD		
DFC-2200	Sheave, 4-"8V"	964155	16.00 OD		
DFC-2200	Sheave, 6-"8V"	964156	16.00 OD		
DFC-2200	Sheave, 6-"8V"	964157	20.00 OD		
DFC-2200	Sheave, 10-"5V"	964158	14.50 OD		
DFC-2200	Sheave, 5-"8V"	964159	16.00 OD		

DFC Model Clutches

Model	Static Torque at 80 psi	Maximum RPM	Effective Facing Area	Peak Input Rate (HP)	Heat Sink Capacity (ft lbs.)	HP_t up to
DFC-1650	36,000 in. lbs.	1200	227 in ^{2}	204 HP	870,000	8.0
DFC-2200	66,800 in.lbs.	900	330 in ^{2}	297 HP	1,460,000	10.0

DUAL-FACED FRICTION MODEL CLUTCHES - APPROXIMATE DIMENSIONS (INCHES)

Pilot Mount

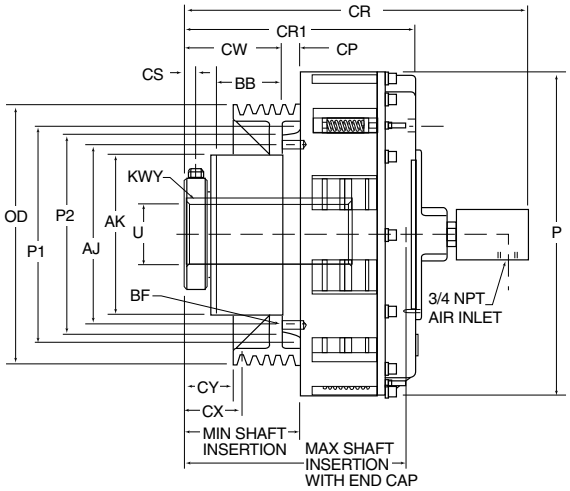

MODEL	PRODUCT NUMBER	AJ	AK ±.001	BB	BF SIZE	BF QTY	CP	CR	CR1	CS	KWY CW	KWY WD	DP	P	P1	P2	SHAFT INSERT MIN	SHAFT INSERT MAX	U +.001 -.000
DFC-1650	964149	10.375	9.248	3.848	.500-13	12	1.10	19.27	13.23	0.62	5.54	0.875	0.437	18.85	11.57	11.38	6.44	12.62	3.375
DFC-2200	964151	11.327	10.200	5.50	.500-13	8	0.40	21.21	14.79	0.62	7.19	0.875	0.437	24.50	12.45	12.45	6.94	14.21	3.375

Sheaves (Optional)

MODEL	PRODUCT NUMBER	GROOVE	QTY	OD	CX	CY
DFC-1650	964152	5V	6	15.00	2.54	2.04
DFC-1650	964153	5V	5	15.00	3.23	2.73
DFC-1650	964154	5V	4	14.00	3.91	3.41

MODEL	PRODUCT NUMBER	GROOVE	QTY	OD	CX	CY
DFC-2200	964155	8V	4	16.00	1.31	0.56
DFC-2200	964156	8V	6	16.00	0.81	0.06
DFC-2200	964157	8V	6	20.00	0.81	0.06
DFC-2200	964158	5V	10	14.50	0.53	0.03
DFC-2200	964159	8V	5	16.00	1.31	0.56

HEAVY DUTY CLUTCH & BRAKE ELEMENTS
DFE & QFE MODEL SERIES

This **16 Model** Series of air-actuated **Dual Faced** and **Quad Faced Elements** are designed for heavy duty industrial applications requiring high torque and low inertia:

- Static Torque ratings up to 302,000 In. Lbs. @ 80 psi (see chart page 60)
- Maximum Operating Speed up to 1600 rpm
- Thermal Horsepower values up to 14.7 @ 1600 rpm
- Bore range up to 6.500 inches
- Thru-Shaft or Shaft-End Mount Brake
- Horizontal Shaft-End mounted Clutch Element mounts to a customer supplied flywheel, gear or pulley
- Dual Faced Elements have single disc assemblies, Quad Faced Elements have double disc assemblies
- Available with either Standard or High coefficient friction linings
- Single or Double Disc Assemblies available in 4 disc sizes
- Rugged design ensures long product life
- Sealed O-ring piston & cylinder design reduces maintenance costs
- Air Union Bracket Assembly includes flexible hose.

Manufactured in the U.S.A. under license of Coremo Ocemea - Italy

With this Heavy Duty Model Series, tough applications are made easy. Each of the 16 Models are detailed on the next few pages.

Peak Input Rate

The DFE and QFE Series of Clutches and Brakes are designed for applications requiring high torque and low inertia. The peak input rate may be the limiting factor in high inertia starts or stops, even though the Heat Sink Capacity is efficient.

The peak input rate capacity is the rate at which the clutch absorbs heat at the friction interface during the acceleration period while interfaces are slipping, or until the load and the clutch are operating at the same speed. See page 368 the Engineering Data Section for information explaining how to calculate the Peak Input Rate and how to avoid potential problems.

Heat Sink Capacities & Peak Input Rate

Model	Heat Sink Capacity (Ft Lbs)	Peak Input Rate (HP)	Effective Interface Areas
DFE 1150-S/H	390,000	105	117 in²
DFE 1650-S/H	870,000	204	227 in²
DFE 2200-S/H	1,187,000	297	330 in²
DFE 2500-S/H	1,460,000	363	404 in²
QFE 1150-S/H	780,000	210	234 in²
QFE 1650-S/H	1,740,000	408	454 in²
QFE 2200-S/H	2,374,000	594	660 in²
QFE 2500-S/H	2,920,000	727	808 in²

Continuous Rated Thermal Horsepower Dissipation Vs. RPM

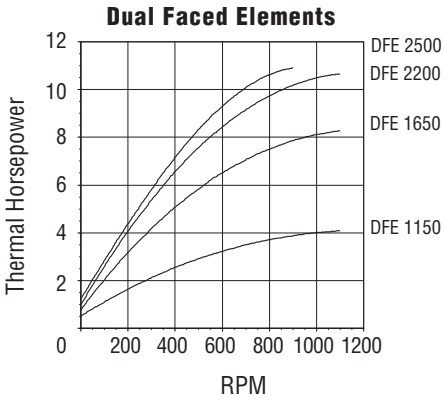

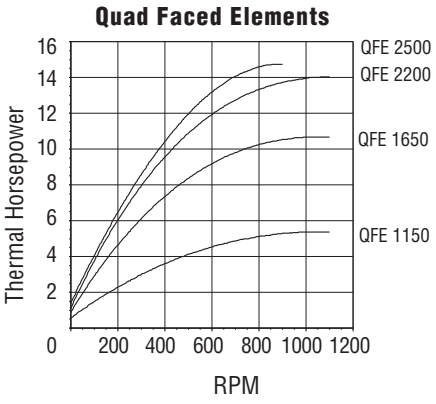

Clutch Element Mounted to Bearing Supported Pulley

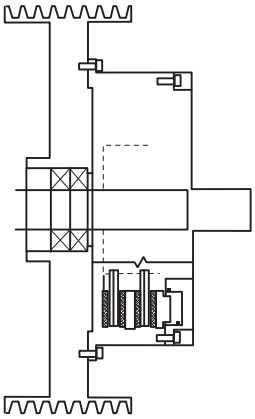

When Element is Used as a Clutch:

Element must be Shaft-End Mounted in a horizontal position.

The housing is flange mounted to a bearing supported component (flywheel, gear, pulley).

The Hub is keyed to the shaft.

Air is supplied through a Rotary Air Union and flexible hoses.

NOTE: Not suitable for Thru-Shaft mounting.

Clutch Air Connection

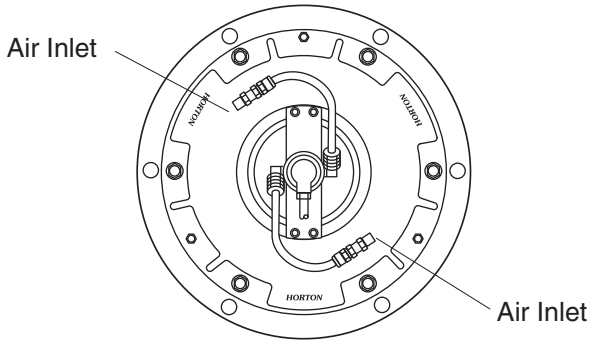

Clutch Air Connection:

Attach the Rotary Air Union Bracket to the cylinder with four cap screws.

Install a flexible hose in the Rotary Air Union and in the Air Union Bracket.

Install elbow fittings in the cylinder and Air Union Bracket.

Connect the cylinder hoses to the fittings.

Do not use rigid pipe or tubing for these connections.

Shaft-End Mounted Brake Element

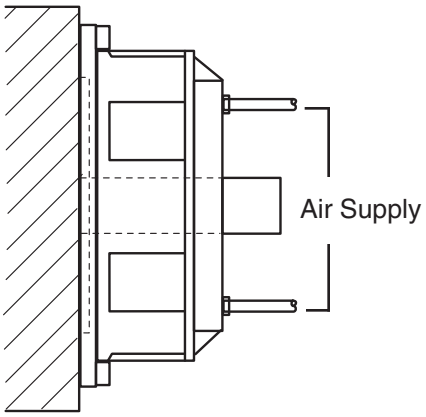

When Element is Used as a Brake:

Element must be Shaft-End Mounted in a horizontal position.

The housing is flange mounted to the machine frame.

The Hub is keyed to the shaft.

Air is supplied directly at the cylinder air inlets.

Brake Air Connection:

Connect the air supply directly to the two air ports, located 180 degrees apart in the cylinder.

See page 150-161 for Spring Engaged Brake.

NOTE: DFE & QFE units are intended for horizontal mounting only.

DFE MODEL CLUTCH & BRAKE ELEMENTS

This **8 Model** Series of air-actuated Dual Faced Elements are designed for heavy-duty industrial applications requiring high torque and low inertia:

- Static Torque ratings up to 151,000 In. Lbs. @ 80 psi (see chart)
- Maximum Operating Speed up to 1600 rpm
- Thermal Horsepower values up to 10.9 @ 900 rpm
- Bore range up to 6.500 inches
- Shaft-End Mount Clutch
- Thru-Shaft or Shaft-End Mount Brake
- Horizontal Shaft-End mounted Clutch Element mounts to a customer supplied flywheel, gear or pulley
- Dual Faced Elements have single disc assemblies
- Available with either Standard or High coefficient friction linings
- Single Disc Assemblies available in 4 Disc sizes
- Rugged design ensures long product life
- Sealed O-ring piston and cylinder design reduces maintenance costs
- Air Union Bracket Assembly includes flexible hose.

Manufactured in the U.S.A. under license of Coremo Ocemea - Italy

NOTE: Dynamic torque is approximately 85% of static torque.

How to Specify and Order DFE Clutch & Brake Elements:

1. Determine which bore size you will need;
2. If you require a bore size other than the standard Hub bore, you can either order this special size from Nexen or machine it yourself;
3. Order the matching Air Union Bracket Assembly for Shaft-End mounting applications.

Model	Product Number	Disc Size	PILOT HUB BORE +.001/-.000 w/o Keyway	HUB BORE RANGE w/o Keyway (In) MIN.	MAX.	Speeds Up to RPM Disc	Housing	Shipping Wt. (Lbs)
Standard Coefficient Friction Linings								
DFE 1150-S	964000	11.50	1.000	1.000	2.500	2200	1600	143
DFE 1650-S	964003	16.50	2.000	2.000	4.000	1500	1200	252
DFE 2200-S	964006	22.00	2.500	2.500	6.000	1100	900	439
DFE 2500-S	964009	25.00	2.500	3.000	6.000	1000	800	542
High Coefficient Friction Linings								
DFE 1150-H	964001	11.50	1.000	1.000	2.500	2200	1600	143
DFE 1650-H	964004	16.50	2.000	2.000	4.000	1500	1200	252
DFE 2200-H	964007	22.00	2.500	2.500	6.000	1100	900	439
DFE 2500-H	964010	25.00	2.500	3.000	6.000	1000	800	542

Model	Product Number	Air Union Bracket Assembly Product Number	NPT Size	Shipping Wt. (Lbs)
DFE 1150-S	964000	964012	0.250	1
DFE 1650-S	964003	964013	0.750	2
DFE 2200-S	964006	964014	0.750	3
DFE 2500-S	964009	964015	0.750	3
DFE 1150-H	964001	964012	0.250	1
DFE 1650-H	964004	964013	0.750	2
DFE 2200-H	964007	964014	0.750	3
DFE 2500-H	964010	964015	0.750	3

Torque Vs. Air Pressure

Standard Coefficient Linings

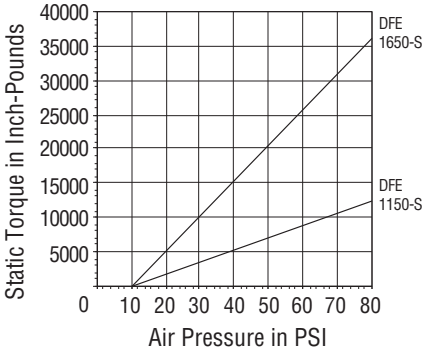

Standard Coefficient Linings

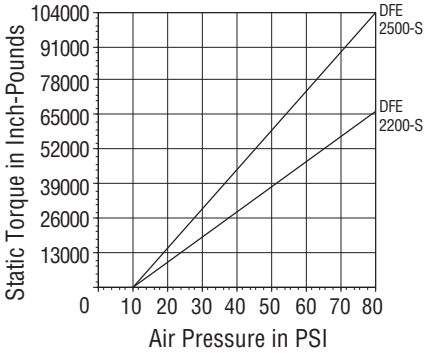

High Coefficient Linings

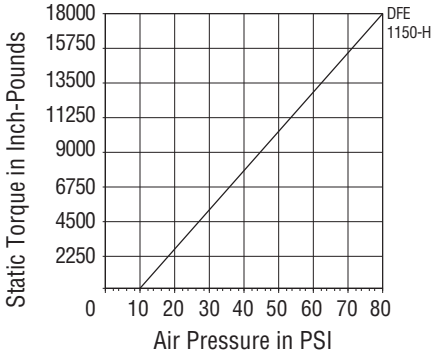

High Coefficient Linings

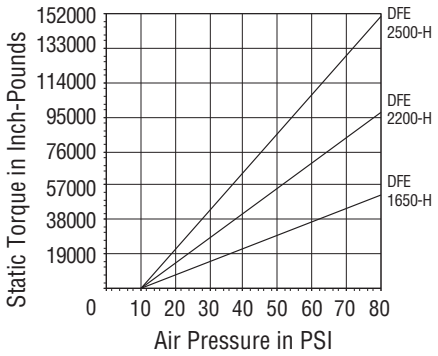

DFE MODEL CLUTCH & BRAKE ELEMENTS - APPROXIMATE DIMENSIONS (INCHES)

DFE Element With Air Union Bracket Assembly

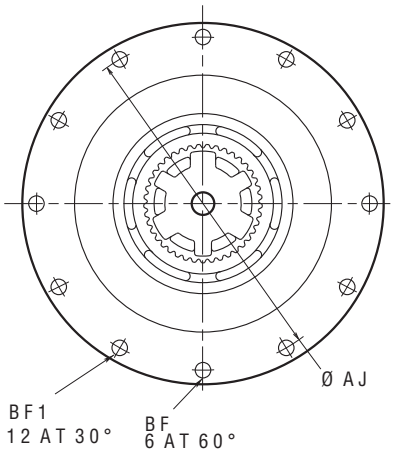

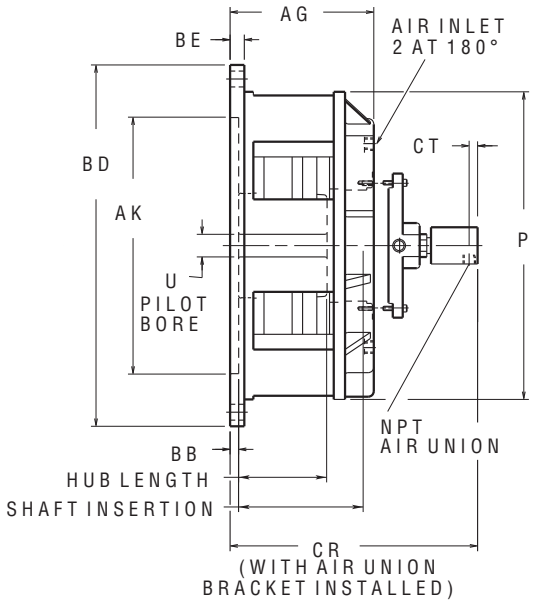

MODEL	PRODUCT NUMBER	AIR INLET NPT	HUB LENGTH	AG	AJ	AK ±.001	BB	BD	BE	BF	BF1	CR	CT	P	AIR UNION NPT	U +.001 -.000	SHAFT INSERTION MIN.	SHAFT INSERTION MAX.
DFE 1150-S	964000	.250	3.90	6.36	14.750	11.376	0.38	16.00	0.63	0.69	--	10.04	0.38	13.62	.250	1.000	3.90	5.52
DFE 1150-H	964001	.250	3.90	6.36	14.750	11.376	0.38	16.00	0.63	0.69	--	10.04	0.38	13.62	.250	1.000	3.90	5.52
DFE 1650-S	964003	.500	4.70	6.74	20.000	16.251	0.38	21.25	0.62	--	0.69	12.78	0.62	18.75	.750	2.000	4.70	5.91
DFE 1650-H	964004	.500	4.70	6.74	20.000	16.251	0.38	21.25	0.62	--	0.69	12.78	0.62	18.75	.750	2.000	4.70	5.91
DFE 2200-S	964006	.500	6.00	7.19	25.500	21.376	0.31	27.00	0.75	--	0.69	13.23	0.62	24.50	.750	2.500	6.00	6.47
DFE 2200-H	964007	.500	6.00	7.19	25.500	21.376	0.31	27.00	0.75	--	0.69	13.23	0.62	24.50	.750	2.500	6.00	6.47
DFE 2500-S	964009	.500	6.00	7.22	28.750	24.376	0.25	30.00	0.75	--	0.69	13.26	0.62	27.50	.750	2.500	6.00	6.50
DFE 2500-H	964010	.500	6.00	7.22	28.750	24.376	0.25	30.00	0.75	--	0.69	13.26	0.62	27.50	.750	2.500	6.00	6.50

DFE Hub Only

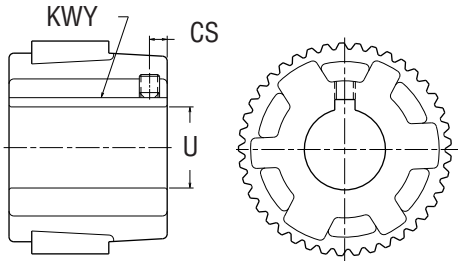

MODEL	CS
DFE 1150	0.44
DFE 1650	0.62
DFE 2200	0.75
DFE 2500	0.75

Hub Bore Information

All standard Hubs are furnished in the bore listed in dimension "U" and without keyway or set screw. The Hub bore can be increased to a size equal to the maximum diameter indicated in the table. If you need to increase the bore size of the Hub, you have two options:

1. Nexen can supply you with a specified bore and matching keyway at your request for an extra charge.
2. You can machine your own bore and keyway, with the limits listed in the table.

The following table indicates bore sizes and corresponding key and set screw sizes.

Bore Size	Key Size (SQ)	Set Screw Size
1.000-1.250	0.250	0.312-18
1.312-1.375	0.312	0.375-16
1.437-1.750	0.375	0.375-16
1.812-2.250	0.500	0.500-13
2.312-2.750	0.625	0.500-13
2.812-3.250	0.750	0.625-11
3.312-3.750	0.875	0.750-10
3.812-4.500	1.000	0.750-10
4.562-5.500	1.250	0.875-9
5.562-6.500	1.500	1.000-8

QFE MODEL CLUTCH & BRAKE ELEMENTS

This **8 Model** Series of air-actuated Quad Faced Elements are designed for heavy-duty industrial applications requiring high torque and low inertia:

- Static Torque ratings up to 302,000 In. Lbs. @ 80 psi (see chart)
- Maximum Operating Speed up to 1600 rpm
- Thermal Horsepower values up to 14.7 @ 900 rpm
- Bore range up to 6.500 inches
- Shaft-End Mount Clutch
- Thru-Shaft or Shaft-End Mount Brake
- Horizontal Shaft-End mounted Clutch Element mounts to a customer supplied flywheel, gear or pulley
- Quad Faced Elements have single disc assemblies
- Available with either Standard or High coefficient friction linings
- Double Disc Assemblies available in 4 Disc sizes
- Rugged design ensures long product life
- Sealed O-ring piston and cylinder design reduced maintenance costs
- Air Union Bracket Assembly includes flexible hose.

Manufactured in the U.S.A. under license of Coremo Ocemea - Italy

NOTE: Dynamic torque is approximately 85% of static torque.

How to Specify and Order QFE Clutch & Brake Elements:

1. Determine which bore size you will need;
2. If you require a bore size other than the standard Hub bore, you can either order this special size from Nexen or machine it yourself;
3. Order the matching Air Union Bracket Assembly for Shaft-End mounting applications.

Model	Product Number	Disc Size	PILOT HUB BORE +.001/-.000 w/o Keyway	HUB BORE RANGE w/o Keyway (In) MIN.	MAX.	Speeds Up to RPM Disc	Housing	Shipping Wt. (Lbs)
Standard Coefficient Friction Linings								
QFE 1150-S	964060	11.50	1.500	1.500	3.250	2200	1600	202
QFE 1650-S	964063	16.50	2.000	2.000	5.000	1500	1200	358
QFE 2200-S	964066	22.00	3.000	3.000	6.500	1100	900	643
QFE 2500-S	964069	25.00	3.500	3.500	6.500	1000	800	787
High Coefficient Friction Linings								
QFE 1150-H	964061	11.50	1.500	1.500	3.250	2200	1600	202
QFE 1650-H	964064	16.50	2.000	2.000	5.000	1500	1200	358
QFE 2200-H	964067	22.00	3.000	3.000	6.500	1100	900	643
QFE 2500-H	964070	25.00	3.500	3.500	6.500	1000	800	787

Model	Product Number	Air Union Bracket Assembly Product Number	NPT Size	Shipping Wt. (Lbs)	Max Torque (in-lb)
QFE 1150-S	964060	964012	0.250	1	24,600
QFE 1650-S	964063	964013	0.750	2	72,000
QFE 2200-S	964066	964014	0.750	3	133,000
QFE 2500-S	964069	964015	0.750	3	208,000
QFE 1150-H	964061	964012	0.250	1	35,800
QFE 1650-H	964064	964013	0.750	2	104,900
QFE 2200-H	964067	964014	0.750	3	194,600
QFE 2500-H	964070	964015	0.750	3	302,000

Torque Vs. Air Pressure

Standard Coefficient Linings

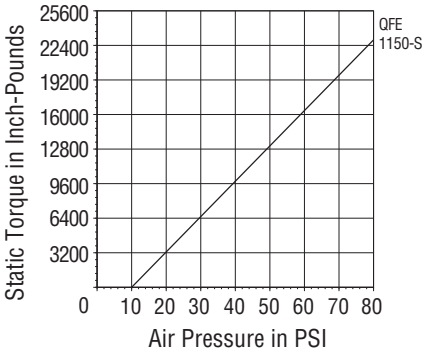

Standard Coefficient Linings

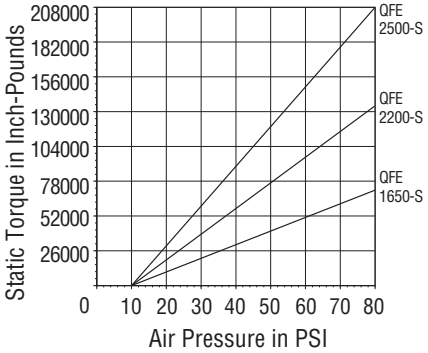

High Coefficient Linings

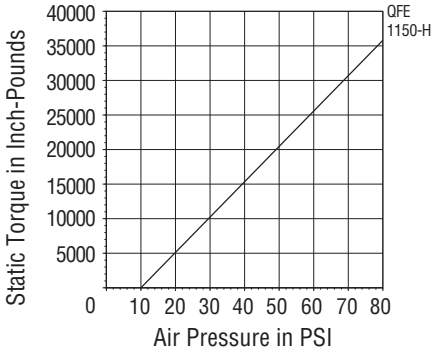

High Coefficient Linings

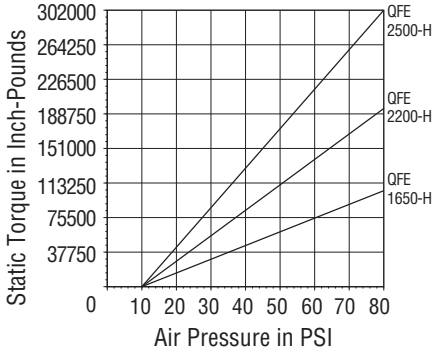

QFE MODEL CLUTCH & BRAKE ELEMENTS - APPROXIMATE DIMENSIONS (INCHES)

QFE Element with Air Union Bracket Assembly

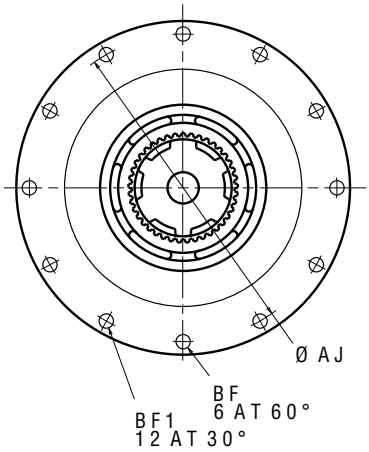

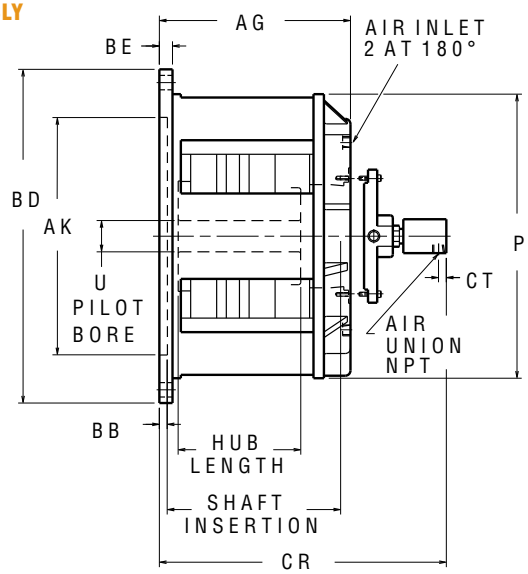

(WITH AIR UNION BRACKET INSTALLED)

MODEL	PRODUCT NUMBER	AIR INLET NPT	HUB LENGTH	AG	AJ	AK ±.001	BB	BD	BE	BF	BF1	CR	CT	P	AIR UNION NPT	U +.001 -.000	SHAFT INSERTION MIN.	SHAFT INSERTION MAX.
QFE 1150-S	964060	.250	5.88	9.16	14.750	11.376	0.38	16.00	0.63	0.69	--	12.83	0.38	13.62	.250	1.500	5.88	7.79
QFE 1150-H	964061	.250	5.88	9.16	14.750	11.376	0.38	16.00	0.63	0.69	--	12.83	0.38	13.62	.250	1.500	5.88	7.79
QFE 1650-S	964063	.500	6.75	9.55	20.000	16.251	0.38	21.25	0.62	--	0.69	15.60	0.63	18.75	.750	2.000	6.75	8.20
QFE 1650-H	964064	.500	6.75	9.55	20.000	16.251	0.38	21.25	0.62	--	0.69	15.60	0.63	18.75	.750	2.000	6.75	8.20
QFE 2200-S	964066	.500	7.88	10.39	25.500	21.376	0.31	27.00	0.75	--	0.69	16.43	0.63	24.50	.750	3.000	7.88	8.92
QFE 2200-H	964067	.500	7.88	10.39	25.500	21.376	0.31	27.00	0.75	--	0.69	16.43	0.63	24.50	.750	3.000	7.88	8.92
QFE 2500-S	964069	.500	7.88	10.42	28.750	24.376	0.25	30.00	0.75	--	0.69	16.46	0.63	27.50	.750	3.500	7.88	8.86
QFE 2500-H	964070	.500	7.88	10.42	28.750	24.376	0.25	30.00	0.75	--	0.69	16.46	0.63	27.50	.750	3.500	7.88	8.86

QFE Hub Only

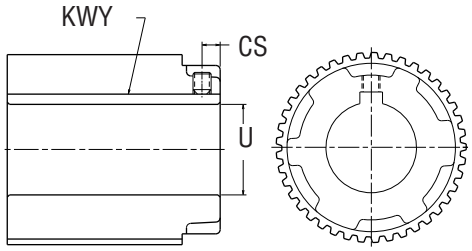

Model	CS
QFE 1150	0.50
QFE 1650	0.75
QFE 2200	0.75
QFE 2500	0.75

Hub Bore Information

All standard Hubs are furnished in the bore listed in dimension "U" and without keyway. The Hub bore can be increased to a size equal to the maximum diameter indicated in the table. If you need to increase the bore size of the Hub, you have two options:

1. Nexen can supply you with a specified bore and matching keyway at your request for an extra charge.
2. You can machine your own bore and keyway, within the limits listed in the table.

The following table indicates bore sizes and corresponding key and screw sizes.

Bore Size	Key Size (SQ)	Set Screw Size
1.00-1.250	0.250	0.312-18
1.312-1.375	0.312	0.375-16
1.437-1.750	0.375	0.375-16
1.812-2.250	0.500	0.500-13
2.312-2.750	0.625	0.500-13
2.812-3.250	0.750	0.625-11
3.312-3.750	0.875	0.750-10
3.812-4.500	1.000	0.750-10
4.562-5.500	1.250	0.875-9
5.562-6.500	1.500	1.000-8

LSCC STRAIGHT BORE CONVEYOR CLUTCHES

Nexen's air-engaged, straight-bore series of conveyor clutches offer high torque in a small package. The LSCC line is ideal for soft starts on accumulating, chain-driven live-roller, or in-line conveyor applications. With a maximum torque rating of 452 Nm [4000 in-lb] and a bore range from 12 to 38 mm [0.500-1.500 in], these products can outperform the competition at a lower cost. Nexen's conveyor lines comes standard with a pilot designed for easy sprocket mounting or can be configured for a variety of mounting applications (double-single sprocket, timing belt sprocket, v-belt sheave, plate, etc.).

- High torque: 452 Nm [4000 in-lb] at 5.5 bar [80 psi]
- Bore range: 12-38 mm [0.500-1.500 in]
- Through-shaft design with three set screws for easy mounting
- Variable mounting configurations: plate or double-single sprocket, timing belt sprocket, plate, or sheave
- Open design, improved airflow, high thermal horsepower
- Internal spline drive for trouble free disengagement performance
- Shielded ball bearings for low disengagement drag
  - -sealed bearings also available
- No rotary air union required
- Compact size
- Spring biased for complete disengagement
- Field repairable o-rings, facings and springs

LSCC-32, 44, 54 Straight Bore Conveyor Clutch Specifications

Model	Torque Nm [in-lb]	Product Number	Bore mm [in]	Mounting Style	Sprocket Style	Sprocket Pitch	Sprocket Teeth
LSCC-32	85 [750]	923553	22,2 [0.875]	Pilot	--	--	--
		923564	15,9 [0.625]		--	--	--
		923565	19,1 [0.750]		--	--	--
		923583	22,2 [0.875]	Sprocket	Single	40	26
		923582	22,2 [0.875]		Single	60	19
		923566	19,1 [0.750]		Double/Single	50	18
LSCC-44	238 [2110]	923550	28,6 [1.250]	Pilot	--	--	--
		923554	30,2 [1.188]		--	--	--
		923557	25,4 [1.00]		--	--	--
		923562	28,6 [1.125]		--	--	--
		923590	28,0 [1.1]		--	--	--
		923556	25,4 [1.00]	Sprocket	Single Plate	50	19
		923567	25,4 [1.00]				20
		923569	30,2 [1.188]			60	21
		923563	25,4 [1.00]				18
		923586	25,4 [1.00]		Double/Single	40	24
		923568	25,4 [1.00]			50	20
		923587	28,6 [1.125]				22
		923581	30,2 [1.188]			60	21
LSCC-54	452 [4000]	923576	38,1 [1.500]	Pilot	--	--	--
		923588	36,5 [1.4375]		--	--	--

Single - Type 'A' Sprocket Sizes

Sprocket Mounting Sizes Using Standard Single Strand Roller Chain

Model	Pilot Diameter	Mounting Style	Sprocket Pitch / Minimum Number of Teeth				
			35	40-41	50	60	80
LSCC-32	63,5 mm [2.500 in]	Pilot Mount	33	26	21	**	--
		Intregral Sprocket	25	22	19	**	--
LSCC-44	76,2 mm [3.000 in]	Pilot Mount	**	31	25	22	**
		Intregral Sprocket	**	20	17	14	**
LSCC-54	101,6 mm [4.000 in]	Pilot Mount	**	**	32	26	21
		Intregral Sprocket	**	**	24	21	23

Units can be configured with plate or double-single sprocket, timing belt sprocket, or v-belt sheave. Nexen can also configure an optional integral brake, Please consult factory for details.
** Consult the Nexen Custom Business Unit at 800-843-7445 before using the starred chain sizes.

LSCC-32 & 44 Single Sprocket Dimensions

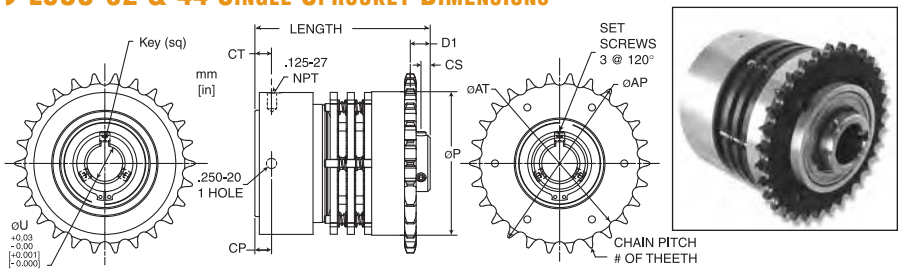

MODEL PRODUCT NO.	øAP	øAT	CP	CS	CT	D1	øU	Key	Length	Pitch	Teeth
LSCC-32 923583	97.44 [3.836]	112.22 [4.418]	10.4 [0.41]	5.76 [0.227]	12.0 [0.47]	12.36 [0.487]	22.22 [0.875]	4.78 [0.188]	109.2 [4.30	#40	26
LSCC-32 923582	103.83 [4.088]	125.60 [4.945]	163.72 [6.446]	5.76 [0.227]	12.0 [0.47]	14.59 [0.574]	22.22 [0.875]	4.78 [0.188]	109.2 [4.30]	#60	19
LSCC-44 923567	91.32 [3.595]	109.76 [4.321]	14.7 [0.58]	4.57 [0.180]	16.7 [0.66]	13.6 [0.53]	25.40 [1.000]	6.35 [0.250]	127.42 [5.016]	#50	20
LSCC-44 923569	115.90 [4.563]	137.83 [5.426]	14.7 [0.58]	4.57 [0.180]	16.7 [0.66]	15.2 [0.60]	30.162 [1.1875]	6.35 [0.250]	127.42 [5.016]	#60	21

STRAIGHT-BORE CONVEYOR CLUTCH - APPROXIMATE DIMENSIONS METRIC [INCHES]

LSCC-32,44, 54 Pilot Mounting

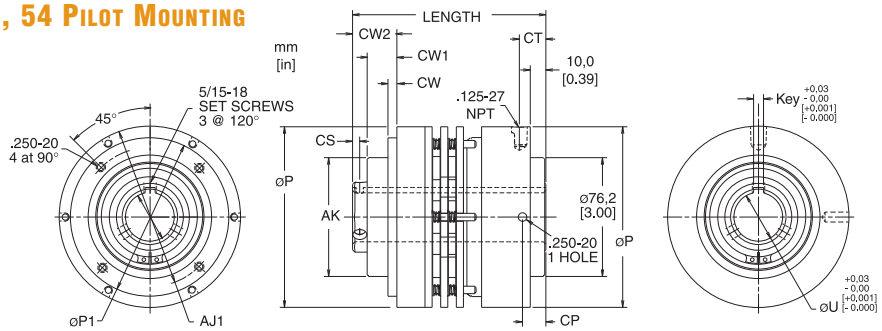

MODEL PRODUCT NO.	øAJ1	øAK	CP	CS	CT	CW	CW1	CW2	øP	øP1	øU	Key	Length
LSCC-32 923553	76,20 [3.000]	63,50 [2.500]	10,4 [4.1]	5,76 [0.227]	12,0 [4.7]	2,54 [0.10]	15,24 [0.60]	24,00 [0.945]	89,4 [3.52]	88,4 [3.52]	22,22 [0.875]	4,80 [0.189]	109,2 [4.3]
LSCC-32 923564	76,20 [3.000]	63,50 [2.500]	10,4 [4.1]	5,76 [0.227]	12,0 [4.7]	2,54 [0.10]	15,24 [0.60]	24,00 [0.945]	89,4 [3.52]	88,4 [3.52]	15,88 [0.625]	4,80 [0.189]	109,2 [4.3]
LSCC-32 923565	76,20 [3.000]	63,50 [2.500]	10,4 [4.1]	5,76 [0.227]	12,0 [4.7]	2,54 [0.10]	15,24 [0.60]	24,00 [0.945]	89,4 [3.52]	88,4 [3.52]	19,05 [0.750]	4,80 [0.189]	109,2 [4.3]
LSCC-44 923550	88,90 [3.500]	76,20 [3.000]	14,7 [0.58]	4,57 [0.180]	16,7 [0.66]	5,70 [0.22]	19,05 [0.750]	28,4 [1.12]	115,8 [4.56]	101,6 [4.00]	31,75 [1.250]	6,35 [0.250]	127,42 [5.016]
LSCC-44 923554	88,90 [3.500]	76,20 [3.000]	14,7 [0.58]	4,57 [0.180]	16,7 [0.66]	5,70 [0.22]	19,05 [0.750]	28,4 [1.12]	115,8 [4.56]	101,6 [4.00]	30,162 [1.1875]	6,35 [0.250]	127,42 [5.016]
LSCC-44 923557	88,90 [3.500]	76,20 [3.000]	14,7 [0.58]	4,57 [0.180]	16,7 [0.66]	5,70 [0.22]	19,05 [0.750]	28,4 [1.12]	115,8 [4.56]	101,6 [4.00]	25,40 [1.000]	6,35 [0.250]	127,42 [5.016]
LSCC-44 923562	88,90 [3.500]	76,20 [3.000]	14,7 [0.58]	4,57 [0.180]	16,7 [0.66]	5,70 [0.22]	19,05 [0.750]	28,4 [1.12]	115,8 [4.56]	101,6 [4.00]	28,52 [1.125]	6,35 [0.250]	127,42 [5.016]
LSCC-44 923590	102,00 [4.016]	88,00 [3.465]	14,7 [0.58]	4,57 [0.180]	16,7 [0.66]	N/A	19,05 [0.750]	28,4 [1.12]	115,8 [4.56]	N/A	28,00 [1.102]	8,00 [0.315]	127,42 [5.016]
LSCC-54 923576	120,65 [4.750]	101,60 [4.000]	21,7 [0.85]	6,9 [0.27]	24,8 [0.98]	7,54 [0.30]	26,7 [1.05]	40,1 [1.58]	145,5 [5.73]	139,7 [5.50]	38,10 [1.500]	9,55 [0.376]	160.1 [6.30]
LSCC-54 923588	120,65 [4.750]	101,60 [4.000]	21,7 [0.85]	6,9 [0.27]	24,8 [0.98]	7,54 [0.30]	26,7 [1.05]	40,1 [1.58]	145,5 [5.73]	139,7 [5.50]	36,51 [1.438]	9,55 [0.376]	160,1 [6.30]

LSCC-32, 44 Double Sprocket

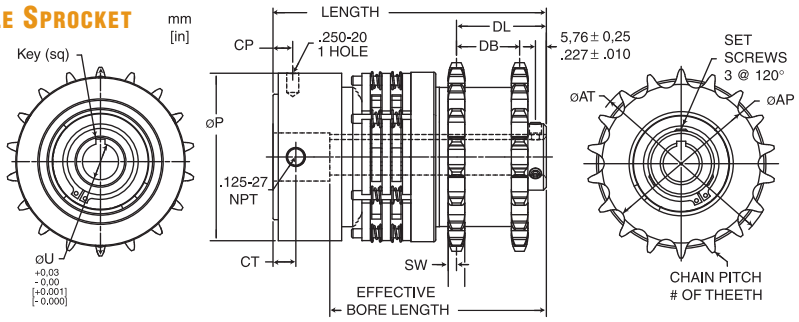

MODEL PRODUCT NO.	øAP	øAT	CP	CT	DB	DL	øP	SW	øU	Key	Length	Pitch	Teeth
LSCC-32 923566	81,26 [3.199]	99,55 [3.919]	11,4 [0.45]	12,1 [0.47]	33,3 [1.31]	47,4 [1.87]	88,39 [3.480]	4,36 [0.172]	19,05 [0.750]	4,78 [0.188]	144,3 [5.68]	#50	18
LSCC-44 923556	85,96 [3.384]	104,66 [4.120]	14,7 [0.58]	16,7 [0.66]	33,32 [1.312]	47,2 [1.86]	115,8 [4.56]	4,36 [0.172]	25,40 [1.000]	6,35 [0.250]	163,72 [6.446]	#50	19
LSCC-44 923563	97,79 [3.85]	119,46 [4.703]	14,7 [0.58]	16,7 [0.66]	37,54 [1.478]	51,4 [2.02]	115,8 [4.56]	5,79 [0.228]	25,40 [1.000]	6,35 [0.250]	163,72 [6.446]	#60	18
LSCC-44 923586	89,37 [3.519]	104,09 [4.089]	14,7 [0.58]	16,7 [0.66]	28,57 [1.125]	44,4 [1.75]	115,8 [4.56]	3,61 [0.142]	25,40 [1.000]	6,35 [0.250]	163,72 [6.446]	#40	24
LSCC-44 923568	91,32 [3.595]	109,76 [4.321]	14,7 [0.58]	16,7 [0.66]	33,33 [1.312]	47,2 [1.86]	115,8 [4.56]	4,36 [0.172]	25,40 [1.000]	6,35 [0.250]	163,72 [6.446]	#50	20
LSCC-44 923587	101,39 [3.992]	119,94 [4.722]	14,7 [0.58]	16,7 [0.66]	33,33 [1.312]	47,2 [1.86]	115,8 [4.56]	4,36 [0.172]	28,58 [1.125]	6,35 [0.250]	163,72 [6.446]	#50	22
LSCC-44 923581	115,90 [4.563]	137,83 [5.426]	14,7 [0.58]	16,7 [0.66]	37,69 [1.484]	51,4 [7.02]	115,8 [4.56]	5,79 [0.228]	30,175 [1.188]	6,35 [0.250]	163,72 [6.446]	#60	21

4HP SERIES, MULTIPLE DISC CLUTCHES

The 4HP Series provides:

- Static Torque up to 10,000 In. Lbs. @ 80 psi
- Maximum Operating Speed up to 1800 rpm
- **12 Bore** sizes ranging from 0.750 to 2.188 inches
- For in-line applications to accommodate misalignment, we recommend use of Nexen Single and Double Flexible Couplings

7 Models offer design flexibility:

- Clutch and Driving Shell as one unit
- 3 or 4 Friction Disc Packs provide High Torque
- **Pilot Mount** design with tapped mounting holes
- Thru-shaft mounting design uses a full-length keyway
- Ability to mount a pulley, sprocket, gear or Nexen Flexible Coupling

CAUTION! Do not use these clutches in applications where soft starts, sustained slipping or high cyclic performance is required. Such applications are best handled by standard "Air Champ" Clutches, Brakes or Clutch-Brakes.

4HP Series, Multiple Disc Clutches

Model	Product Number	Bore (In)	Key Size (SQ)	Shipping Wt. (Lbs)	COUPLING ASSEMBLIES SINGLE FLEX Product Number	COUPLING ASSEMBLIES DOUBLE FLEX Product Number
4H30P	923412	0.750	0.188	6	909980	909981
4H30P	923400	0.875	0.188	6	909980	909981
4H35P	923511	1.000	0.250	9	910080	910081
4H35P	923500	1.125	0.250	9	910080	910081
4H40P	923611	1.188	0.250	12	910180	910181
4H40P	923600	1.250	0.250	12	910180	910181
4H45P	923712	1.438	0.375	16	910280	910281
4H45P	923700	1.500	0.375	16	910280	910281
4H50P	923812	1.688	0.375	19	910380	910381
4H50P	923800	1.750	0.375	19	910380	910381
4H60P	923900	1.938	0.500	32	910480	910481
4H70P	924000	2.188	0.500	49	910580	910581

Keys are customer furnished and must be full-length.

Bushings

Bushings fit within the bore of the existing clutch, reducing the bore to the size indicated. Keys are provided with each Bushing.
For quick selection of compatible Bushings, refer to the chart below.

Product Number	Reduces Clutch Bore Size to (In)	Fits Clutch Product Number	Shipping Wt. (Lbs.)
920400	0.750	923400	1
920500	1.000	923500	1
920600	1.125	923600	1
920700	1.375	923700	2
920800	1.625	923800	2
920900	1.750	923900	4
921000	1.938	924000	5

Attachment Options

Flexible Coupling Assemblies

Flexible Coupling Assemblies are required for in-line coupling applications and are available in single or double flex designs to provide **high misalignment capabilities with high torque**. Turn to pages 66 and 67 for Flexible Coupling details.
For quick selection of Flexible Couplings, refer to the chart above.

Pulleys, Sprockets, Gears

These can be attached to the clutch for off set shaft applications. Tapped holes are provided for ease of mounting. Nexen does not furnish these items.
For minimum sprocket requirements, see pages 369.

Torque Vs. Air Pressure

4H30P

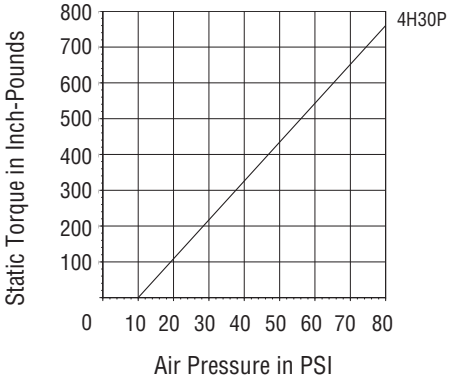

4H35P, 4H40P, 4H45P & 4H50P

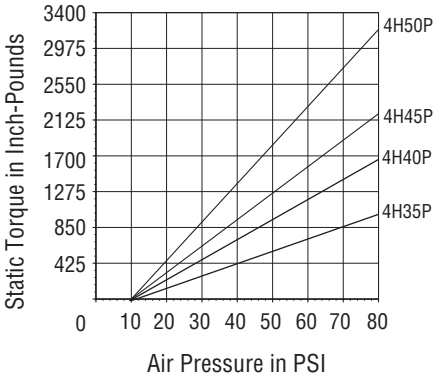

4H60P & 4H70P

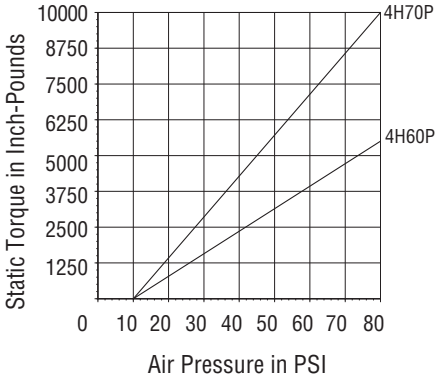

NOTE: Dynamic torque is approximately 85% of static torque.

Study the Clutch Application Data, Torque Charts and RPM/Air Pressure information for these clutches carefully to ensure you have selected the proper 4HP Model for your requirements. If not properly used, failure or poor performance can occur. Please consult Nexen if you are unsure of your applications suitability.

Shown are maximum rpm values (based on 10,000 hours of bearing life) for various air pressures at which the 4HP Clutch Models can be run. For any other rpm at any other air pressure, please consult Nexen

Clutch Application Data

MODEL	MAX. Ft. Lbs. of Energy per Engagement	MAX. Ft. Lbs. of Energy per Minute	HP_T Up to
4H30P	5900	2950	.09
4H35P	8100	4050	.12
4H40P	9590	4795	.15
4H45P	11800	5900	.18
4H50P	12540	6270	.19
4H60P	14750	7375	.22
4H70P	18440	9220	.28

Maximum RPM for Various Air Pressures

Air Pressure PSI	Clutch Sizes 30	35	40	45	50	60	70
80	1400	1200	800	1000	900	700	700
70	1600	1400	1100	1400	1200	900	900
60	1800	1800	1400	1800	1800	1200	1200
50	--	--	1800	--	--	1800	1800
40	--	--	--	--	--	--	--

4HP SERIES, MULTIPLE DISC CLUTCHES - APPROXIMATE DIMENSIONS (INCHES)

Pilot Mount

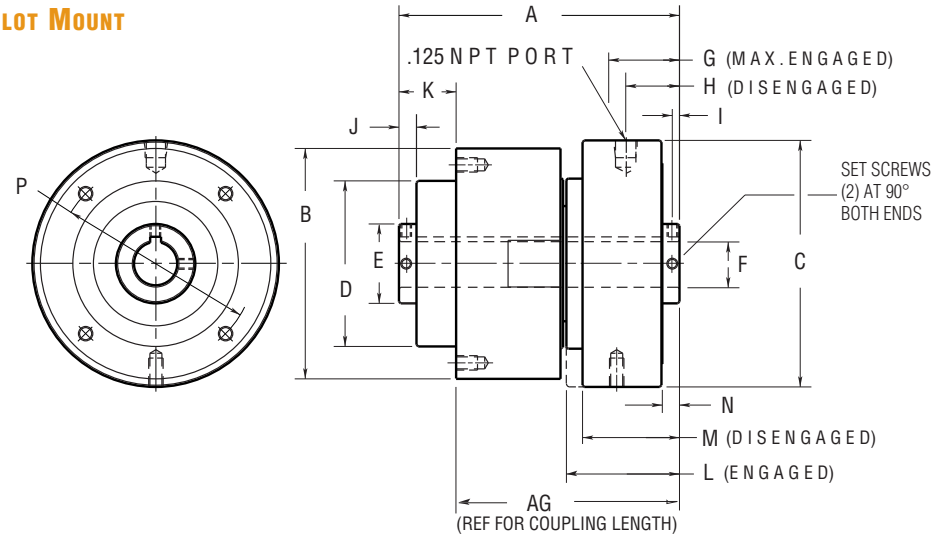

MODEL	PRODUCT NUMBER	A	AG	B	C	D +.000 -.001	E	F +.001 -.000 MAX. BORE	G	H	I	J	K	L	M	N	P TAP	P B.C.
4H30P	923412	4.88	3.88	4.00	4.29	2.875	1.38	0.750	1.26	0.93	0.12	0.32	1.00	2.02	1.68	0.32	(4) .250-20	3.437
4H30P	923400	4.88	3.88	4.00	4.29	2.875	1.38	0.875	1.26	0.93	0.12	0.32	1.00	2.02	1.68	0.32	(4) .250-20	3.437
4H35P	923511	5.25	4.22	4.50	4.88	3.500	1.77	1.000	1.29	0.94	0.12	0.29	1.03	2.03	1.69	0.29	(4) .250-20	4.062
4H35P	923500	5.25	4.22	4.50	4.88	3.500	1.77	1.125	1.29	0.94	0.12	0.29	1.03	2.03	1.69	0.29	(4) .250-20	4.062
4H40P	923611	5.25	4.22	5.00	5.00	3.500	1.77	1.188	1.32	0.94	0.12	0.29	1.03	2.06	1.69	0.29	(4) .250-20	4.25
4H40P	923600	5.25	4.22	5.00	5.00	3.500	1.77	1.250	1.32	0.94	0.12	0.29	1.03	2.06	1.69	0.29	(4) .250-20	4.25
4H45P	923712	5.65	4.50	5.75	5.91	4.125	2.36	1.438	1.33	0.95	0.12	0.32	1.16	2.18	1.80	0.32	(4) .250-20	4.750
4H45P	923700	5.66	4.50	5.75	5.91	4.125	2.36	1.500	1.33	0.95	0.12	0.32	1.16	2.18	1.80	0.32	(4) .250-20	4.750
4H50P	923812	6.02	4.86	6.25	6.25	4.500	2.56	1.688	1.20	1.03	0.16	0.38	1.16	2.39	2.07	0.38	(4) .312-18	5.250
4H50P	923800	6.02	4.86	6.25	6.25	4.500	2.56	1.750	1.20	1.03	0.16	0.38	1.16	2.39	2.07	0.38	(4) .312-18	5.250
4H60P	923900	6.81	5.59	7.25	6.94	5.250	2.95	1.938	1.61	1.17	0.16	0.38	1.22	2.77	2.33	0.38	(4) .312-18	6.125
4H70P	924000	7.66	6.09	8.38	8.12	5.750	3.35	2.188	1.78	1.19	0.16	0.38	1.56	3.08	2.48	0.34	(4) .500-13	7.000

SINGLE AND DOUBLE FLEXIBLE COUPLING ASSEMBLIES

Both Single and Double Flexible Couplings are available for the 4HP Multiple Disc Clutch. See the following pages for details.

4HP CLUTCH FLEXIBLE COUPLING ASSEMBLIES

Couple your shaft to a 4HP Multiple Disc Clutch with a Flexible Coupling Assembly. There are 14 Single Flex and 14 Double Flex Couplings, each designed to fit a specific 4HP Clutch. Whatever the design style, you'll get:

- High Misalignment Capability
- Torque ratings up to 10,000 In. Lbs. @ 80 psi
- Nickel-plated surfaces
- Coupling discs made from composite materials provide the benefits of both a steel disc and elastomeric coupling.

Other benefits include:

- Corrosion resistant
- Requires no lubrication
- Coupling adds no backlash to the drive
- Provides torsional stiffness
- Dampens shock and vibration through the power train
- Reverse Bushing Tapers for bushing installation from the inside of the coupling.

Find the Flexible Coupling that matches your clutch and your application specifications on this page.

4HP Clutch Single & Double Flexible Coupling Selection Chart

1. Determine the Clutch required for your application and find it on the chart below;
2. Find the matching Flexible Coupling Assembly at the top of the column;
3. Double check the Flexible Coupling specifications to ensure conformity with all mating components;
4. A Taper Lock Bushing is required, see chart below for recommended part. This is customer furnished.
5. Clutch and Flexible Coupling Assembly must be ordered separately.

Single Flex #:	909980	910080	910180	910280	910380	910480	910580
Double Flex #:	909981	910081	910181	910281	910381	910481	910581
Model Size:	4H30P	4H35P	4H40P	4H45P	4H50P	4H60P	4H70P
Clutch Product #:	923412	923511	923611	923712	923812	923900	924000
	923400	923500	923600	923700	923800		

Single & Double Flexible Coupling Product Details

Single Flex Product Number	Double Flex Product Number	Dodge Taper Lock® Bushing Number	Bore Range MIN. (In)	Bore Range MAX. (In)	Single Flex Shipping Wt. (Lbs)	Single Flex Inertia (lb-in/in)	Double Flex Shipping Wt. (Lbs)	Double Flex Inertia (lb-in/in)
909980	909981	1215	0.500	1.250	8	2.6	10	3.2
910080	910081	1615	0.500	1.625	10	6.7	13	8.2
910180	910181	2012	0.500	2.000	12	14.2	15	17.5
910280	910281	2517	0.500	2.500	14	30.2	16	36.3
910380	910381	2517	0.500	2.500	22	54.3	25	64.3
910480	910481	3030	0.938	3.000	29	240.7	34	285.7
910580	910581	3535	1.188	3.938	70	254.0	82	629.3

Single Flexible Coupling Misalignment Capacity

Product Number	Angular (Degrees)	Axial (In)	Parallel (In)
909980	1.5	0.065	0.011
910080	1.5	0.070	0.012
910180	1.5	0.080	0.013
910280	1.5	0.090	0.014
910380	1.5	0.105	0.017
910480	1.5	0.120	0.019
910580	1.5	0.135	0.022

Double Flexible Coupling Misalignment Capacity

Product Number	Angular (Degrees)	Axial (In)	Parallel (In)
909981	3.0	0.130	0.063
910081	3.0	0.140	0.078
910181	3.0	0.160	0.085
910281	3.0	0.180	0.091
910381	3.0	0.210	0.104
910481	3.0	0.240	0.117
910581	3.0	0.270	0.137

NOTE: If parallel, angular and axial misalignment are all required, be certain that the combined percentage of each does not exceed 100%. For instance, if 100% of the parallel misalignment rating is required, no angular or axial misalignment is allowed. If 50% of the parallel misalignment rating is required, only 50% of the angular misalignment OR 50% of the axial rating will be available.

Reverse Bushing Tapered Couplings

Single Flex #:	909984	910084	910184	910284	910384	910484	910584
Double Flex #:	909985	910085	910185	910285	910385	910485	910585
Model Size:	4H30P	4H35P	4H40P	4H45P	4H50P	4H60P	4H70P
Clutch Product #:	923412	923511	923611	923712	923812	923900	924000
	923400	923500	923600	923700	923800		

4HP CLUTCH FLEXIBLE COUPLING ASSEMBLIES - APPROXIMATE DIMENSIONS (INCHES)

Single Flex

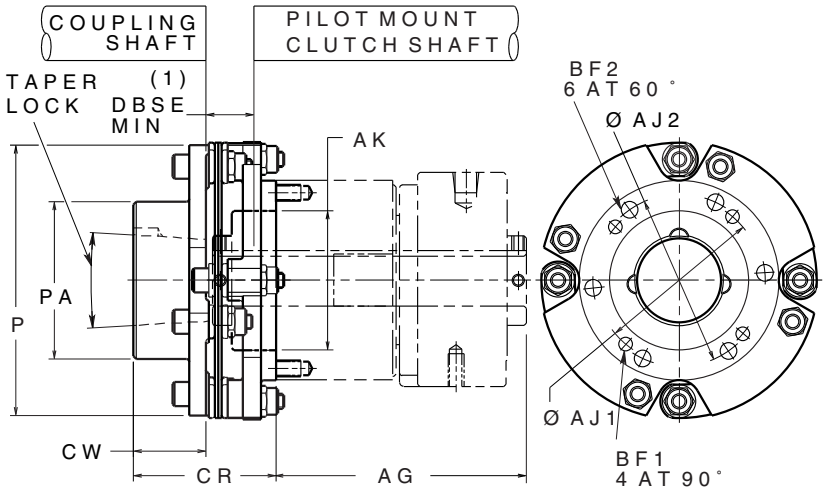

DBSE (1) = Distance Between Shaft Ends. Less than MIN requires equipment removal for service; the MAX distance is dependent on the clutch.

PRODUCT NUMBER	AG	AJ1	AJ2	AK +.001 -.000	HOLE SIZE BF1	HOLE SIZE BF2	BF1 BOLT SIZE	BF2 BOLT SIZE	CR	CW	P	PA	DBSE MIN.	DBSE MAX.
909980	3.88	3.437	3.562	2.875	0.265	0.327	.250-20 x 1.00	.312-18 x 1.25	2.95	1.50	5.75	3.25	0.39	2.59
910080	4.22	4.062	4.062	3.500	0.265	0.327	.250-20 x 1.00	.312-18 x 1.25	3.17	1.50	6.38	3.88	0.52	2.23
910180	4.22	4.250	4.250	3.500	0.265	0.327	.250-20 x 1.25	.312-18 x 1.25	2.97	1.25	6.75	4.38	0.59	1.76
910280	4.50	4.750	4.750	4.125	0.265	0.390	.250-20 x 1.25	.375-16 x 1.50	3.70	1.75	7.25	4.88	0.59	1.75
910380	4.86	5.250	5.375	4.500	0.327	0.515	.312-18 x 1.25	.500-13 x 1.50	4.61	2.50	8.38	5.00	0.86	1.45
910480	5.59	6.125	6.125	5.250	0.327	0.515	.312-18 x 1.50	.500-13 x 1.75	5.31	3.00	9.50	5.75	0.88	1.47
910580	6.09	7.000	7.000	5.750	0.515	0.640	.500-13 x 1.75	.625-11 x 2.00	6.23	3.53	11.38	6.75	1.02	—

Double Flex

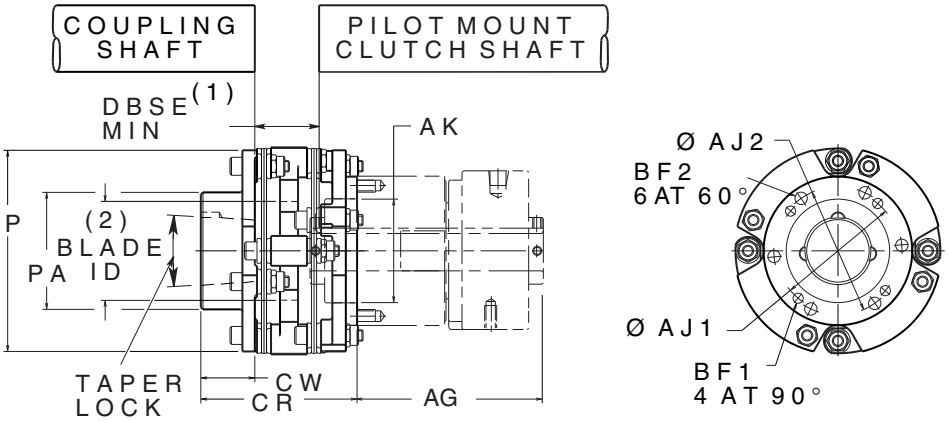

DBSE (1) = Distance Between Shaft Ends. Less than MIN requires equipment removal for service; the MAX distance is dependent on the clutch.

(2) Blade ID is the diameter of the hole in the intermediate member

PRODUCT NUMBER	AG	AJ1	AJ2	AK +.001 -.000	HOLE SIZE BF1	HOLE SIZE BF2	BF1 BOLT SIZE	BF2 BOLT SIZE	CR	CW	P	PA	BLADE ID (2)	DBSE MIN.	DBSE MAX.
909981	3.88	3.437	3.562	2.875	0.265	0.327	.250-20 x 1.00	.312-18 x 1.25	4.34	1.50	5.75	3.25	2.75	1.78	3.98
910081	4.22	4.062	4.062	3.500	0.265	0.327	.250-20 x 1.00	.312-18 x 1.25	4.86	1.50	6.38	3.88	3.00	2.20	3.92
910181	4.22	4.250	4.250	3.500	0.265	0.327	.250-20 x 1.25	.312-18 x 1.25	4.81	1.25	6.75	4.38	3.12	2.44	3.61
910281	4.50	4.750	4.750	4.125	0.265	0.390	.250-20 x 1.25	.375-16 x 1.50	5.70	1.75	7.25	4.88	3.38	2.59	3.75
910381	4.86	5.250	5.375	4.500	0.327	0.515	.312-18 x 1.25	.500-13 x 1.50	6.92	2.50	8.38	5.00	4.12	3.17	3.75
910481	5.59	6.125	6.125	5.250	0.327	0.515	.312-18 x 1.50	.500-13 x 1.75	7.89	3.00	9.50	5.75	4.38	3.45	4.05
910581	6.09	7.000	7.000	5.750	0.515	0.640	.500-13 x 1.75	.625-11 x 2.00	9.28	3.53	11.38	6.75	5.25	3.81	—

Product Function/Selection Chart

Product Groups	Friction Clutches	Tooth Clutches	Multi-Disc Clutches	Dual Plate Clutches	High Capacity Clutches
General Features					
Number of Model Options	15 Standard 5 Metric	40 Standard 35 Metric	7 Standard 0 Metric	4 Standard 0 Metric	16 Standard 0 Metric
Functions					
Controlled Acceleration	Yes			Yes	Yes
Inching/Jogging	Yes			Yes	Yes
Cycling/Indexing	Yes			Yes	Yes
Positioning	Yes	Yes	Yes	Yes	Yes
Reversing/Multiple Speed	Yes	Yes	Yes	Yes	Yes
Tension Control, Rewind	Yes			Yes	
Overload Protection	Yes	Yes		Yes	
Disconnect/Connect	Yes	Yes	Yes	Yes	Yes
Positive Drive		Yes			

In accordance with Nexen's established policy of constant product improvement, the specifications contained in this document are subject to change without notice. Technical data listed in this document are based on the latest information available at the time of printing and are also subject to change without notice. For current information, please consult:
www.nexengroup.com

TENSION CONTROL CLUTCHES

This Section Contains: . . . . .Page

TENSION CONTROL CLUTCHES
Product Overview 70
Straight Bore Rotor Models
TCC7, TCC10, TCC14 & TCC20 71
Rotor Assemblies & Bushings For
Models TC10, TC14 & TC20 72
Tension Control Clutch Accessories 73
Tension Control Clutches Torque and
Thermal Dissipation Charts 74
Recommended Tensions For
Typical Applications 75
STB/STC 600 & 940
Clutches and Brakes 76-77
Technical Evaluation For Clutches 78

Note:
F-450 Rewind Clutches are found on page 34

Nexen Tension Control Clutches, The Ideal Selection.

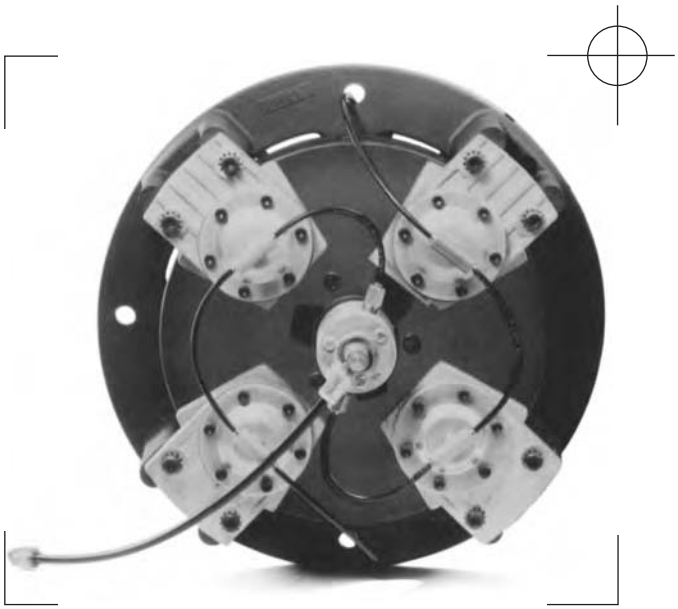

TCC 7, TCC 10, TCC 14 & TCC 20

For nearly 50 years, Nexen has been providing tension control equipment for the paper, printing and converting industries; building clutches, brakes and controls for operations that manufacture and/or handle paper, foil, film, rubber, plastics and fabrics.

In fact, Nexen's very first pneumatic clutches were designed for the paper manufacturing industry in North America, to provide tension control for rewind and unwind stands.

Since then, Nexen has become a major supplier of all kinds of clutches to industry (and the world) at large. But our roots are still firmly anchored in the field of tension control.

Modular Construction

Nexen's innovative line of Modular Tension Control Clutches are designed to be the most flexible, maintenance-free pneumatic units available for continuous winding operations. Ruggedly built to endure the continuous drag and high heat load that tension control demands, yet extremely sensitive and responsive to a wide range of torque requirements.

Tailor-made design at off-rack prices..

Today's tension control operations may have standard horsepower requirements, but torque output needs that vary a great deal. For example, a web printing press may use a different grade and weight paper for each printing job–and the tension requirements for each roll of paper can vary considerably. The ideal tension control clutch is capable of handling all these changes. And, the ideal clutch is the Nexen Clutch.

Features

The Modular construction of Nexen TC Clutches lets a customer custom design a clutch that satisfies a variety of specific needs:

- A broad range of thermal horsepower and torque capacities.
- A full selection of Housing Assemblies with various caliper positions.
- Separate Caliper Assemblies.
- .20, .35 and .45 Coefficient Rated Friction Facings.
- Rotary Air Unions.

Design Versatility

Sprockets or pulleys are attached to the TCC Clutch housing pilot diameter. Torque output is varied by selecting a housing with the number of caliper positions that match the torque requirements to a particular rewind application.

Three friction coefficients are available in facings to further fine tune the performance characteristics of a TC Clutch.

The housing assembly and rotor assembly of the clutch both rotate. Calipers are attached to the clutch housing in equally spaced positions to maintain proper clutch balance.

Clutch housing product numbers are set up with the correct number of caliper positions for balance purposes.

The rotary air union, with dual output ports, is attached to the shaft for connecting the air supply to the calipers.

Torque ranges from a minimum of 8 inch pounds (0.90 Newton Meters) at 1 psi (7 kPa) per caliper set to a maximum of 10,400 inch pounds (1160 Newton Meters) at 80 psi. (550 kPa).

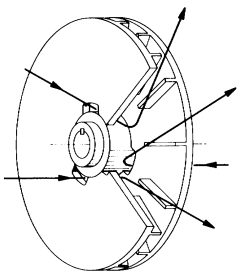

It can stand the heat...

The Nexen TC Units have excellent thermal capacity (required because of the constant drag on the friction facings). Capacities of maximum heat dissipation range from 4.5 to 16.5 thermal horsepower (3.4 to 12.3 Kilowatts). Since the clutch is air operated and air cooled, it does not require an expensive water cooling system.

It's practically care-free...

Only two parts of the TC Clutch will ever need replacing; the diaphragm in the caliper assemblies (virtually never) and the friction facing.

The diaphragms will last practically forever. However, the friction facings need replacing because of wear and the desire to change the coefficient of friction. All it takes is a wrench and screwdriver to remove four cap screws and two machine screws. The whole operation takes about 2 minutes per facing.

(Incidentally, Nexen's facings have been free of asbestos for over 20 years.)

Sensitive, accurate air control...

Each caliper assembly is constructed with a diaphragm instead of a piston/O-ring assembly. This provides a smoother, more sensitive response to the air pressure applied in response to signals from the control panel.

Internal springs return the piston to the disengaged position to guarantee clearance between the friction facing and the rotor when no air pressure is applied.

Air is supplied to the TC clutch calipers through a dual output rotary air union which is attached to the shaft.

Model TCC 7

Ordering Information

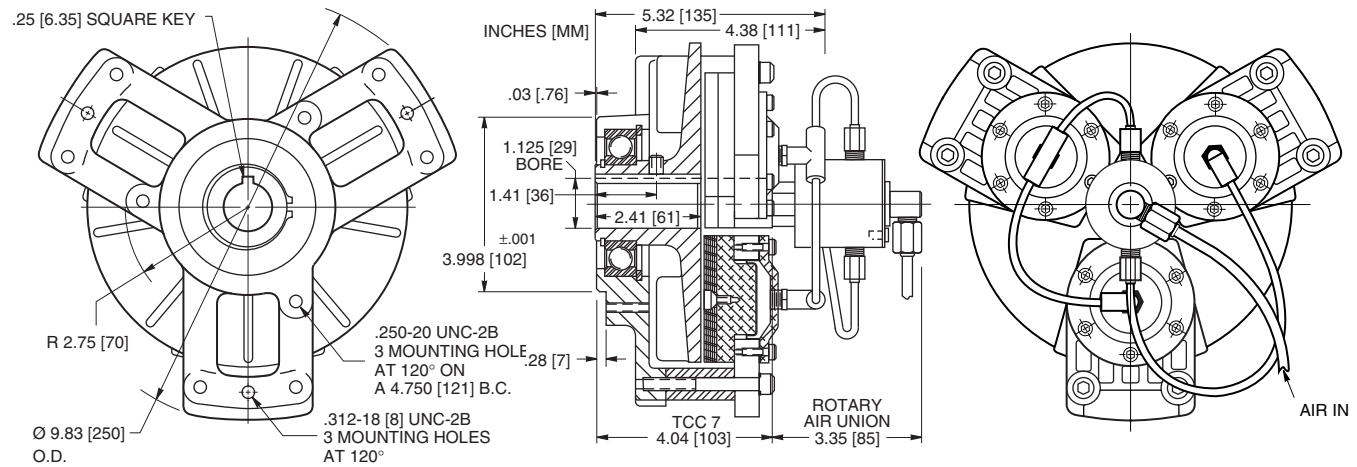

Pictured : TCC 7– with Straight Bore Rotor All dimensions are in inches [mm]

Clutches

Model	Product Number	Speed Up To RPM	Coefficient of Friction	Bore in Inches [MM]	Rotor Inertia lb.Ft²	Housing Inertia lb.Ft²
TCC 7	835166	1800	.35 (Std.)	1.125 [29]	0.229	0.267
TCC 7	835168	1800	.22 (LOCO)	1.125 [29]	0.229	0.267

Accessories

For Model	Product Number	Description
TCC 7 with Std. Bore	835123	Bushing 3/4" [19,05 MM] Bore
	835124	Bushing 7/8" [22,23 MM] Bore
	835125	Bushing 1" [25,40 MM] Bore
	835127	Facing Kit, Standard
	835128	Facing Kit, Loco
	835139	Rotary Air Union

Model TCC 10, 14, & 20

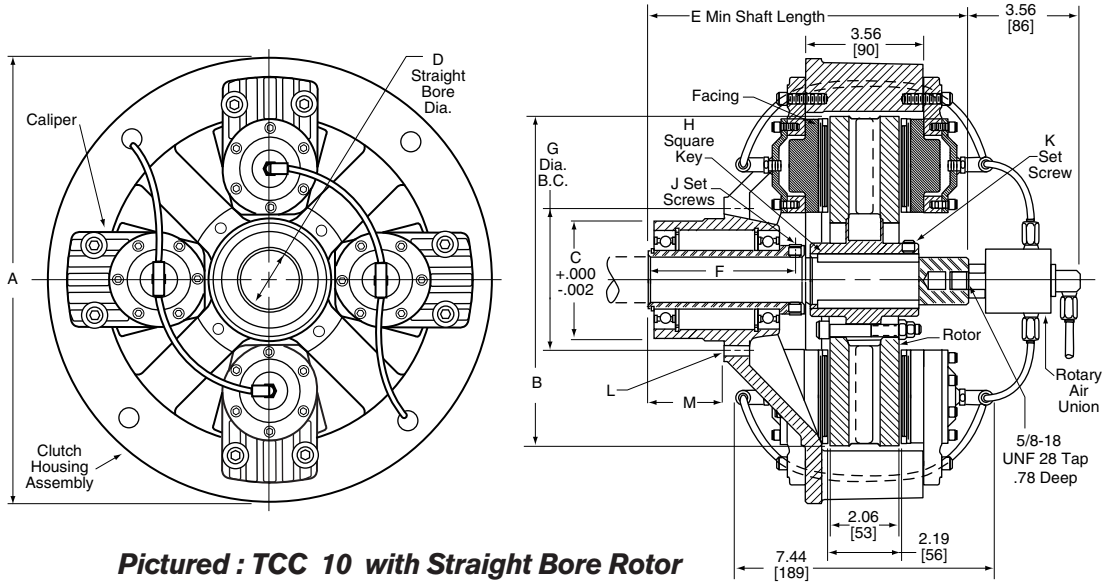

Pictured : TCC 10 with Straight Bore Rotor

Model	A	B	Pilot Dia. C	D	E	F	G	H	3 Screws at 120° J	K	L	M
TCC 10	13.50 [343]	10.00 [254]	3.625 [92]	1.375 [35]	9.15 [232]	4.31 [109]	4.250 [108]	.31 [8]	.375 - 16 (3)	.375 - 16 (3)	.375 - 16 (4)	2.21 [56]
TCC 14	17.50 [445]	14.00 [356]	5.249 [133]	1.937 [49]	10.09 [254]	4.63 [118]	6.250 [159]	.50 [13]	.375 - 16 (3)	.500 - 13 (3)	.500 - 13 (6)	2.49 [63]
TCC 20	23.50 [597]	20.00 [508]	8.000 [203]	2.937 [75]	12.31 [313]	5.66 [144]	9.000 [229]	.75 [19]	.375 - 16 (3)	.750 - 10 (3)	.500 - 13 (8)	3.34 [85]

Rotor Assembly with Straight Bore

Ordering Information

Quantity	Discription	Shipping Wt. Lbs. [Kg]
1	Housing Assembly	See below
1	Rotor Assembly with Straight Bore	See below
2–8	Caliper Assemblies as required	See below
2–8	Friction Facing Kits as required	See below
1	Rotary Air Union	See below

ROTORS

Model	Straight Bore Product Number	Unfinished Bore Product Number	HPt❶ [kW]❶ Up to	Heat Sink Capacity Ft. lbs [Joules]	Speed Up to RPM	Inertia in lb.ft² [Kg.m²]	Bore Range❷ Min	Bore Range❷ Max	Standard❸ Bore Inches [MM]	Ship WT. Lbs. [Kg]
TC 10	835150	835156	4.5 [3.36]	663,000 ft. lbs. [898907]	1500	2.39 [1,00]	.750 [19,05]	1.375 [34,92]	1.375 [34,92]	28 [12,7]
TC 14	835151	835157	9.5 [7]	998,000 ft. lbs. [1353106]	1200	9.02 [3,80]	1.250 [31,75]	2.500 [63,5]	1.937 [49,19]	61 [27,7]
TC 20	835152	835158	16.5 [12.3]	1,535,000 ft. lbs. [2081324]	900	38.12 [1,61]	2.500 [63,5]	4.500 [114,3]	2.937 [74,59]	168 [76,2]

❶Thermal Horsepower (Kilowatts) at maximum rated rpm. See Thermal Horsepower (Kilowatts) vs RPM curves for other speeds.

❷ Bored-to-size TC Rotors available on request. See Bore and Keyway Dimensions

❸ See bushing selection chart for bore reduction.

BUSHINGS

For Model	Product Number	Description
TC 10 with Std. Bore	821800	Bushing 3/4 in (19.05mm) Bore
	820800	Bushing 7/8 inch (22.23mm) Bore
	820900	Bushing 1.0 inch (25.40mm) Bore
	821000	Bushing 1 1/8 inch (28.58mm) Bore
	821100	Bushing 1 3/16 inch (30.15mm) Bore
	821200	Bushing 1 1/4 inch (31.75mm) Bore
	821900	Bushing–No Bore
TC 14 with Std. Bore	822700	Bushing 1.0 inch (25.40mm) Bore
	822800	Bushing 1 3/8 inch (34.93mm) Bore
	822900	Bushing 1 1/2 inch (38.10mm) Bore
	823000	Bushing 1 5/8 inch (41.28mm) Bore
	823100	Bushing 1 11/16 inch (42.85mm) Bore
	823200	Bushing 1 3/4 inch (44.45mm) Bore
	823800	Bushing – No Bore
TC 20 with Std. Bore	825800	Bushing 1 1/4 inch (31.75mm) Bore
	824700	Bushing 1 15/16 inch (49.21mm) Bore
	824800	Bushing 2.0 inch (50.80mm) Bore
	824900	Bushing 2 3/16 inch (55.55mm) Bore
	825000	Bushing 2 1/4 inch (57.15mm) Bore
	825100	Bushing 2 7/16 inch (61.91mm) Bore
	825200	Bushing 2 1/2 inch (63.50mm) Bore
	825300	Bushing 2 3/4 inch (69.85mm) Bore
	825900	Bushing – No Bore

BORE AND KEYWAY DIMENSIONS

Bore Range*	Key (Square)	Keyway Tolerance
.750 – .875 [19,05 – 22,23]	.188 [4,78]	+.002 –.000 [+0,05 –0,0]
.937 – 1.250 [23,80 – 29,21]	0.250 [6,35]	+.002 –.000 [+0,05 –0,0]
1.312 – 1.375 [33,32 – 34,92]	0.312 [7,92]	+.002 –.000 [+0,05 –0,0]
1.437 – 1.750 [36,50 – 44,45]	0.375 [9,53]	+.002 –.000 [+0,05 –0,0]
1.812 – 2.250 [46,02 – 57,15]	0.500 [9,53]	+.003 –.000 [+0,08 –0,0]
2.312 – 2.750 [58,72 – 69,85]	0.625 [15,88]	+.003 –.000 [+0,08 –0,0]
2.812 – 3.250 [71,42 – 82,55]	0.750 [19,05]	+.003 –.000 [+0,08 –0,0]
3.312 – 3.750 [84,12 – 95,25]	0.875 [22,23]	+.004 –.000 [+0,08 –0,0]
3.812 – 4.500 [96,82 – 114,3]	1.000 [25,4]	+.004 –.000 [+0,08 – 0,0]

*Bore Tolerance +.002" -.000" [+0,05 –0,0]

Housing Assembly–TCC (Tension Control Clutch)

Accessories

Model	Product Number	Number of Caliper Positions	Speed Up To RPM	Inertia in lb.ft² [Kg.m²]	Bore Diameter Inches [MM]	Ship Wt. lbs. [Kg]
TCC10-2	835140	2	1500	3.82 [1,61]	1.375 [34,9]	31 [1,35]
TCC 10-4	835141	4	1500	4.03 [1,70]	1.375 [34,9]	31 [1,35]
TCC 14-2	835142	2	1200	9.53 [4,02]	1.937 [49,2]	57 [2,59]
TCC 14-3	835143	3	1200	9.78 [4,12]	1.937 [49,2]	57 [2,59]
TCC 14-4	835144	4	1200	10.03 [4,26]	1.937 [49,2]	57 [2,59]
TCC 14-6	835145	6	1200	10.54 [4,44]	1.937 [49,2]	57 [2,59]
TCC 20-4	835146	4	900	27.28 [1,15]	2.937 [74,6]	110 [4,99]
TCC 20-6	835147	6	900	28.50 [1,20]	2.937 [74,6]	110 [4,99]
TCC 20-8	835148	8	900	29.71 [1,25]	2.937 [74,6]	110 [4,99]

Caliper Assemblies

Caliper Assemblies are common to all TC models. Each Caliper assembly consists of two Caliper halves. Order one Caliper assembly for each Caliper position.

Product Number.....835121

Ship Wt.: .....2.5 lbs. [1,13 Kg}
Air Chamber Volume per set: .....1.25 cu. in.
.....[1.97 cu. mm]

Friction Facing Kits

Friction Facing Kits contain two asbestos free facings of the specific coefficient of friction selected. One facing kit is required per caliper assembly.

Coefficient	Product Number
HICO .45	835111
STD .35	835112
LOCO .20	835113

Ship Wt.: ..... 1/2 lbs. [2,26 Kg]

Rotary Air Union

The dual output Rotary Air Union is used to connect an air supply to the calipers for a Tension Control Clutch (TCC) installation. The Rotary Air Union is attached to the end of the shaft where the clutch is mounted. A 5/8-18 tapped hole, .78 deep is required.

Product Number.....835139

Ship Wt.: ..... 1.2 lbs. [5,44 Kg]

TCC TORQUE CHARTS

TCC 7 TORQUE IN INCH POUNDS				
Number of Calipers	Coefficient of Friction			
	.20(LoCo)		.35(Std)	
	80 PSI	1 PSI	80 PSI	1 PSI
1	80	2	140	4
2	160	4	280	8
3	240	6	420	12

TCC 7 TORQUE IN NEWTON METERS				
Number of Calipers	Coefficient of Friction			
	.20(LoCo)		.35(Std)	
	550 kPa	7 kPa	550 kPa	7 kPa
1	9	0,22	15,8	0,45
2	18	0,45	31,6	0,90
3	27,1	0,67	47,5	1,35

TCC 10 TORQUE IN INCH POUNDS						
Number of Calipers	Coefficient of Friction					
	.20(LoCo)		.35(Std)		.45(HiCo)	
	80 PSI	1 PSI	80 PSI	1 PSI	80 PSI	1 PSI
2	520	8	800	12	1060	14
4	1040	16	1600	24	2120	28

TCC 10 TORQUE IN NEWTON METERS						
Number of Calipers	Coefficient of Friction					
	.20(LoCo)		.35(Std)		.45(HiCo)	
	550 kPa	7 kPa	550 kPa	7 kPa	550 kPa	7 kPa
2	59	0,9	90	1,4	120	1,6
4	118	1,8	180	2,7	240	3,2

TCC 14 TORQUE IN INCH POUNDS						
Number of Calipers	Coefficient of Friction					
	.20(LoCo)		.35(Std)		.45(HiCo)	
	80 PSI	1 PSI	80 PSI	1 PSI	80 PSI	1 PSI
2	800	12	1320	18	1700	24
3	1200	18	1980	27	2550	36
4	1600	24	2640	36	3400	48
6	2400	36	3960	54	5100	72

TCC 14 TORQUE IN NEWTON METERS						
Number of Calipers	Coefficient of Friction					
	.20(LoCo)		.35(Std)		.45(HiCo)	
	550 kPa	7 kPa	550 kPa	7 kPa	550 kPa	7 kPa
2	90	1,4	149	2	192	2,7
3	136	2	224	3	288	4
4	181	2,7	298	4	384	5,4
6	271	4	447	6	576	8,1

TCC 20 TORQUE IN INCH POUNDS						
Number of Calipers	Coefficient of Friction					
	.20(LoCo)		.35(Std)		.45(HiCo)	
	80 PSI	1 PSI	80 PSI	1 PSI	80 PSI	1 PSI
4	2560	36	4000	56	5200	72
6	3840	54	6000	84	7800	108
8	5120	72	8000	112	10400	144

TCC 20 TORQUE IN NEWTON METERS						
Number of Calipers	Coefficient of Friction					
	.20(LoCo)		.35(Std)		.45(HiCo)	
	550 kPa	7 kPa	550 kPa	7 kPa	550 kPa	7 kPa
4	289	4	452	6,3	588	8,1
6	434	6	678	9,5	881	12,2
8	578	8,1	904	12,6	11,75	16,3

Thermal Dissipation Vs RPM

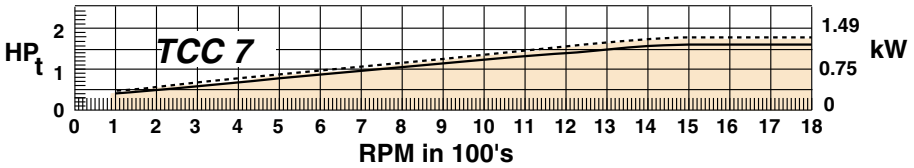

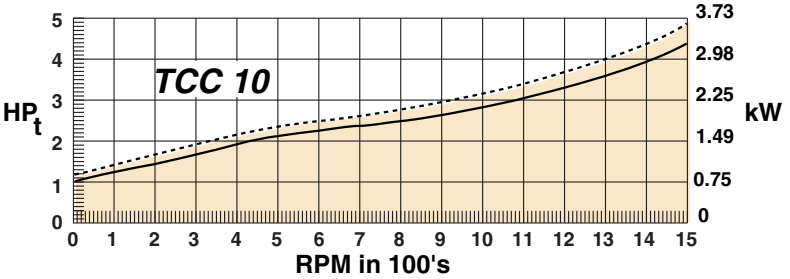

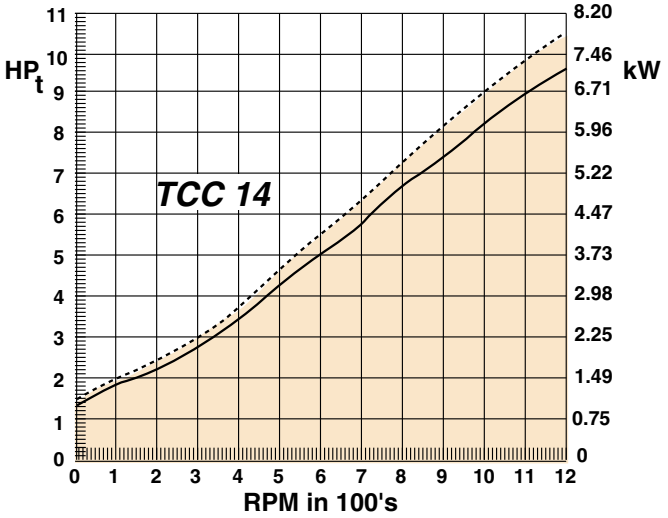

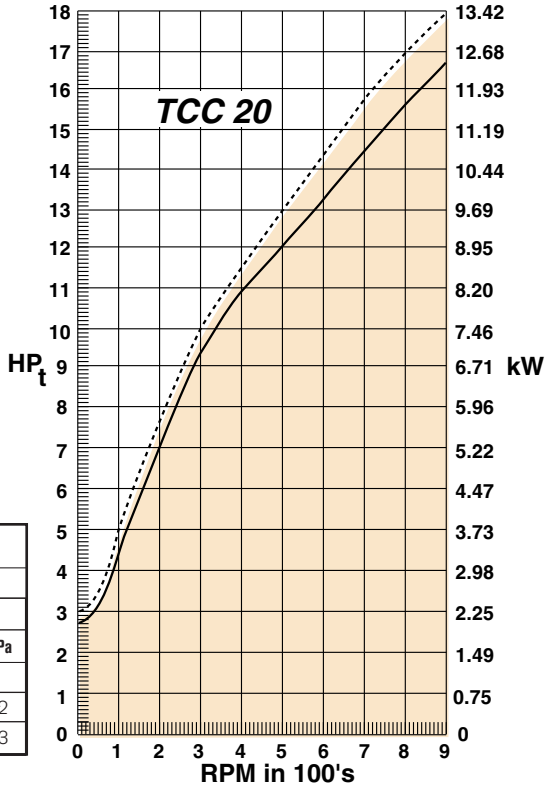

Caution:
Do Not operate **clutch** outside of shaded area.

Data derived at indicated ambient temperature:

- - - - - - At 55° - 60° F., 13°-16° C. Ambient,

——— At 75° - 80° F., 24°-27° C. Ambient

Warning:
Caliper assemblies must be equally spaced on clutch housings to maintain proper balance. Match the number of calipers with a clutch housing that has the same number of caliper positions.

Recommended Tensions for Typical Converting Applications

PAPER PRODUCTS

Suggested Tension Levels
(Based upon 3000 ft² ream)

Basis Weight	WIND Pounds/Lineal Inch	UNWIND Pounds/Lineal Inch
15	0.5	0.25
20	0.75	0.5
30	1	0.75
40	1.5	1
50	2	1.25
60	2.5	1.75
80	3	2
100	4	3
120	5	3.5
150	6	4
180	8	6
200	10	7

PAPER BOARD

(Measures as Point = 0.001 inch)

Point	WIND Pounds/Lineal Inch	UNWIND Pounds/Lineal Inch
8	3	2
12	4	2.75
15	5	3.25
20	7	4.75
25	9	6
30	11	7.25

FILMS AND FOILS

Material	Pounds/Mil/Inch
Acetate	0.50
Alum. Foil	1
Cellophane	0.75
Cellulose	0.5
Cryovac	0.1
Glassine	1.5
Polyester	0.75
Nylon	0.25
Polyethylene	0.25
Polystyrene	1
Pliofilm	0.1
Saran	0.1
Vinyl	0.1
Polypropylene	0.25

WIRE

AWG	Total Tension (Lbs)
8	30
10	20
12	12
14	9
16	6
20	5
24	4.5
30	1.25
36	0.25
40	0.1

Copper	Use Chart Value
Aluminum	Use Chart Value x 0.6
Multi-strand	Use tension per strand x number of strands

Please Note: This list is a guideline only. Actual tensions may vary depending upon the type of operation, for example, slitting tensions may be slightly lower, while coating and laminating tensions may be slightly higher than the values listed above.

(METRIC)

PAPER/PAPERBOARD

Weight (g/m2)	WINDING Tension (N/cm)	UNWINDING Tension (N/cm)
25	1,3	0,8
30	1,8	1,0
50	2,6	1,6
65	3,5	2,3
100	5,3	3,5
130	7,0	4,6
160	7,8	5,0
200	8,8	5,8
260	12,3	8,1
325	16,0	10,5
400	19,0	12,5

FILMS/FOILS

Material	Tension (N/u/mm)
Aluminum Foil	0,70
Cellophane	0,70
Acetate	0,35
Polyester (mylar)	0,50
Polyethylene (PE)	0,20
Polypropylene	0,20
Polystyrene	0,70
Saran	0,07
Vinyl	0,07

WIRE

Diameter (mm)	Total Tension (Kgs)
2,590	9
2,050	5
1,630	4
1,290	2,72
0,813	2,26
0,511	2
0,254	0,57
0,127	0,12
0,079	0,05

Copper	Use Chart Value
Aluminum	Use Chart Value x 0.6
Multi-strand	Use tension per strand x number of strands

STC 600 AND 940 CLUTCHES

Superior tension control through a broad torque range.

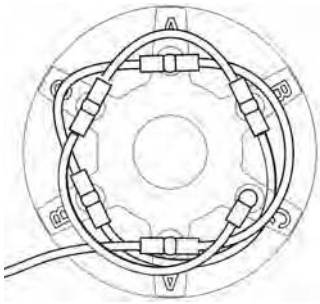

Diagram 1: Plumbing the 600/940 with no valves

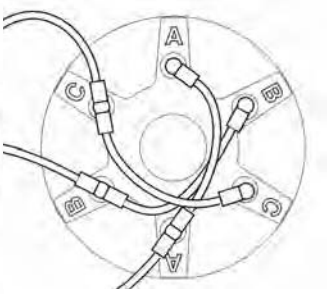

Diagram 2: Plumbing the 600/940 with three valves

The STC 600 and 940 Clutches allow superior torque control for your web with Nexen's line of patented tension control clutches. Three different sized piston sets can be actuated singly, or in any combination for a large number of torque-to-air pressure ranges.

This unique design gives you precise torque control without the problems associated with operating at low air pressures.

Ventilated rotor keeps the clutch and brake cool

The ventilated rotor creates an airflow path that draws cooler ambient air into the center of the rotor. The flow path directs air past the interface and dissipates heat radially away from the unit. This keeps the unit running cooler and longer for better performance.

Different piston sizes give you the widest range

Nexen's clutches actuate using a piston / diaphragm combination in three different sizes. There are no o-rings to stick, no seals to drag. There's nothing to hinder precise control of torque at lower operating pressures.

By engaging and disengaging various combinations of small, medium and large piston sets, you'll have a broad range of torque vs. Air pressure combinations. This gives you precise control over a wide range of torques and air pressures and lets you run a wider variety of materials on the same machine.

Features and benefits

- Fine torque control for precise tension control of web processes - 500:1 tension control range
- Field and dynamic programming of pressure/ torque characteristics for flexible operations
- Diaphragm operation – no seals to drag or o-rings to stick for great low pressure performance
- Different size piston sets
- Through-shaft mounting
- Compact size
- No rotary air unions required – eliminates "gun drilling" shafts

Variable torque ranges through the use of valves

Use air valves to engage combinations of pistons as shown in Diagram 2. Read the torque value for each piston set directly from the Torque vs. Air Pressure graph on the next page and add them.

Example: STC 600

Large piston set at 40 p.s.i. has a rated torque of 95 in-lb.
Medium piston set at 40 p.s.i. has a rated torque of 67 in-lb.
Small piston set at 40 p.s.i. has a rated torque of 41 in-lb.

Total torque at 40 p.s.i.:
Large + Medium =
95 + 67 = 162 in-lb.
Small only = 41 in-lb.

The total torque range of the clutch will equal the sum of the torques of the individual sets from 0 to maximum air pressure.

STC 600 AND 940 CLUTCHES

Torque vs. Air Pressure

Thermal Horsepower vs. RPM

STC 600

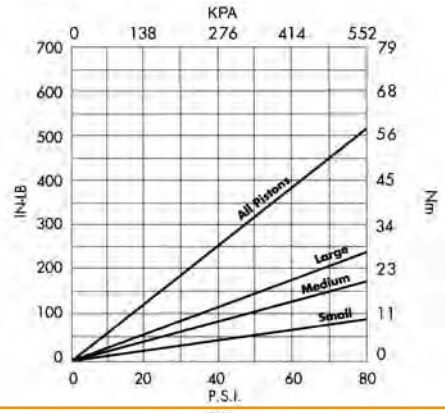

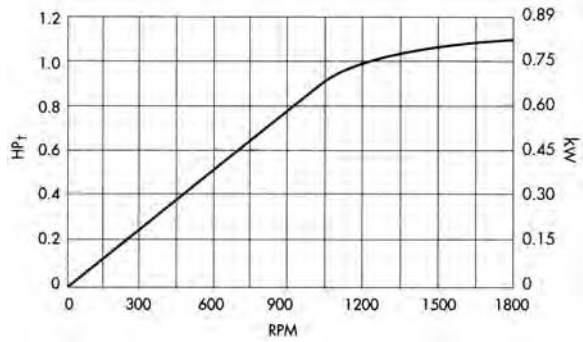

STC 940

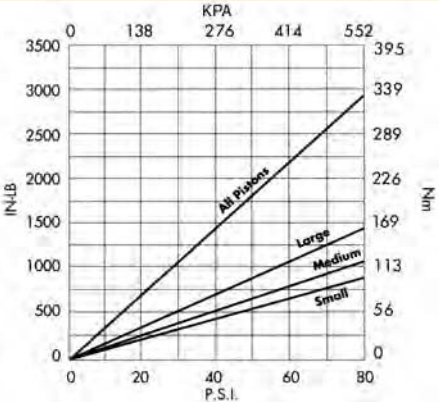

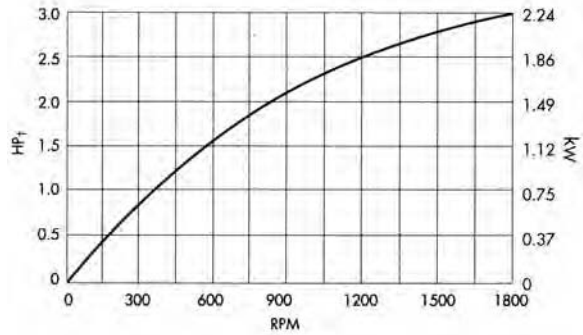

Specifications

MODEL	PRODUCT NUMBER	MAX. RPM	TEE FITTING	ELBOWS	TUBING	BORE DIAMETER	SHIPPING WEIGHT
STC 600	927200	3600	5	3	60 Inch [1524 MM]	1.125* Inch [29 MM]	20.0 Lbs. [9 Kg]
STC 940	927211	2400	5	3	60 Inch [1524 MM]	1.938* Inch [49 MM]	54.2 Lbs. [25 Kg]

*With standard square keyways.. Consult factory for other bore size requirements

Dimensions

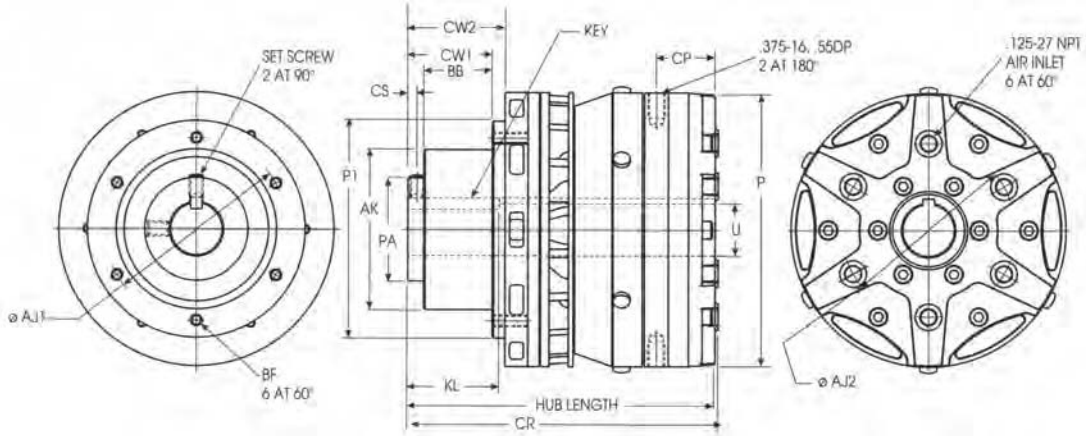

MODEL	PRODUCT NUMBER	AJ1.	AJ2	AK$^{\pm.001}$	BB	BF	CP	CR	CS	CW1	CW2	HUB LENGTH	KEY (SQ.)	KL	P	P1	PA	SET SCREW	U$^{+.001}_{-.000}$
STC 600	927200	4.000 [102]	3.800 [97]	3.500 [89]	1.50 [38]	.25-20 [6]	1.28 [33]	6.78 [172]	0.20 [5]	1.84 [47]	2.12 [54]	6.71 [170]	0.250 [6]	2.00 [51]	6.00 [153]	4.75 [121]	2.25 [57]	.312-18 [8]	1.125 [29]
STC 940	927211	5.625 [143]	6.140 [156]	4.873 [124]	1.75 [44]	.375-16 [10]	1.75 [44]	9.04 [230]	0.37 [9]	2.37 [60]	3.18 [81]	8.97 [228]	0.500 [13]	3.00 [76]	9.40 [239]	6.62 [168]	2.94 [75]	.500-13 [13]	1.938 [49]

TECHNICAL EVALUATION FOR CLUTCHES

General Selection Calculations

Imperial System (Metric System)

1. Fill in data for Roll Diameter, Web Speed, Web Width and Tension (See chart on page 75 for suggested tension levels for various materials).
2. If tension is given as pounds per mil per inch, (as newtons per micron per mm,) then web thickness is also required data.
3. Calculate maximum and minimum web tension ($T_W$max and $t_W$min).
4. Calculate Torque Requirement maximum and minimum. (Calculate Web Power, Total Power and Thermal Power.)
5. Some tension control systems feature a taper tension circuit to reduce tension as wind up roll size increases. Calculate and use maximum taper torque as a substitute for maximum torque when using these systems.
6. Calculate Belted RPM.
7. Calculate Web Horsepower (Power), Total Horsepower (Power) and Thermal Horsepower (Power).

Clutch Selection

(Refer to torque and horsepower charts on pages 74 and 77.)

1. Clutch must dissipate thermal horsepower (Power) at Belted RPM.
2. Clutch must be able to rotate at Belted RPM.
3. Clutch must deliver both the maximum and minimum torque within its normal control range.

Clutch Selection Data

Imperial System (Metric System)

Roll Diameter

Max._____ in. (_____ mm) (D)

Min. _____ in. (_____ mm) (d)

Web Width

Max. _____ in. (_____ mm) (W)

Min._____ in. (_____ mm) (w)

Web Thickness

Max. _____ Mils (M) (_____ Micron) (μ)

Min. _____ Mils (m) (_____ Micron) (μ)

Web Speed

Max._____ FPM (_____ mpm) (V)

Min. _____ FPM (_____ mpm) (v)

Tension Data

Max._____ T ❑ total ❑ pli (N/mm) ❑ lb/mil/in (N/μ/mm) (T)

Min. _____ t ❑ total ❑ pli (N/mm) ❑ lb/mil/in (N/μ/mm) (t)

Clutches

_____ % Taper

_____ % Taper

Web Tension (T_W) Calculation:

If tension (T) is given as:

Total Tension; $T_W = T =$ _____ lb (N)

$t_w = t =$ _____ lb (N)

PLI (N/mm); $T_W = W \times T =$ _____ lb (N)

$t_w = w \times t =$ _____ lb (N)

Lb/mil/in; $T_W = W \times M \times T =$ _____ lb

$t_w = w \times m \times t =$ _____ lb

N/μ/mm; $T_W = W \times \mu \times T =$ _____ (N)

$t_w = w \times \mu \times t =$ _____ (N)

Brake Torque Requirement (τ)

$\tau Max = T_W Max \times D \div 2$

_____ x _____ ÷ 2 = _____ inch lbs.

$\tau Max = T_W Max \times D \div (2000)$

_____ x _____ ÷ 2 = _____ (Nm)

$\tau Min. = t_w Min \times d \div 2$

_____ x _____ ÷ 2 = _____ inch lbs.

$\tau Min. = t_w Min \times d \div (2000)$

_____ x _____ ÷ 2 = _____ (Nm)

Maximum Taper Torque

$\tau Maxt = \tau Max \left(1 - \frac{\%\ taper}{100}\right)$

_____ (1 – _____) = _____ inch lbs. (Nm)

Belted RPM

$\frac{V \times 12 \times 1.05}{d \times \pi}$

$\frac{____ \times 12 \times 1.05}{____ \times 3.14} =$ _____ RPM

or metric

$\frac{V \times (1000) \times 1.05}{d \times \pi}$

$\frac{____ \times (1000) \times 1.05}{____ \times 3.14} =$ _____ RPM

Web Horsepower (HP_W)

$\frac{T_W Max \times V}{33000}$

$\frac{____ \times ____}{33000} =$ _____ HP_W

or metric

Web Power (kW)

$\frac{T_W Max \times V}{(6000)}$

$\frac{____ \times ____}{(6000)} =$ _____ (kW)

Total Horsepower (HP)

(Total Power)

$\frac{HP_W\ (HP) \times D \times 1.05}{d}$

$\frac{____ \times ____}{____} \times 1.05 =$ _____ HP (kW)

Thermal Horsepower (HP_t)

(Thermal Power (kW))

$HP - HP_W$

_____ – _____ = _____ HP_t (kW)

Nexen Engineering Service

Fax or e-mail to your Nexen Applications Engineer (Numbers listed on back cover of catalog)

Name _____ *Title:* _____ *Date:* _____ *Phone:* (____)_____ *Ext:* _____

Company: _____ *Fax or e-mail:* _____

Address: _____ *City:*_____*State:* _____ *Zip Code* _____

nexen

"Air Champ"

In accordance with Nexen's established policy of constant product improvement, the specifications contained in this document are subject to change without notice. Technical data listed in this document are based on the latest information available at the time of printing and are also subject to change without notice. For current information, please consult:
www.nexengroup.com

TOOTH CLUTCHES

This Section Contains: . . . . .Page

TOOTH CLUTCHES

5H Model Flange Mount Multiposition . . .80-81
5HP Model Pilot Mount Multiposition . . .82-83
5HP & 5HP-E Flexible Couplings 84-85
5HP-E Enclosed Pilot Mount Multiposition 86-87
5HP-SP Model Pilot Mount Enclosed Single Position 88-89
5HP-SP & 5HP-SP Single and Double Flexible Couplings 90-91
5HP-SP-E Model Enclosed Pilot Mount Single Position 92-93
5HS Model Sprocket Tooth Clutches . . .94-95
5HP-SE Series Spring Engaged 96-97

This Section Contains: . . . . .Page

METRIC TOOTH CLUTCHES

5H Model Flange Mount Multiposition 98-99
5HP Model Pilot Mount Multiposition 100-101
5HP-E Enclosed Pilot Mount Multiposition 102-103
5HP-SP Pilot Mount Enclosed Single Position 104-105
5HP-SP-E Model Enclosed Pilot Mount Single Position 106-107

5H SERIES, FLANGE MOUNT TOOTH CLUTCHES

The 5H Series provides:

- Instantaneous Torque up to 17,500 In. Lbs. @ 80 psi
- Maximum Operating Speed up to 3,700 rpm
- **7 Bore sizes** ranging from 0.875 to 2.188 inches
- Positive engagements in multiple positions
- Immediate start-up with no slippage
- Versatile mounting capability for bearing supported pulley, sprocket or gear

7 Models offer design flexibility:

- Sealed, radial ball bearings
- **Flange Mount** design with tapped mounting holes
- Thru-shaft mounting design uses a full-length keyway
- 8.25 inch hose included.

5H Series, Flange Mount Tooth Clutches

Model	Product Number	Speeds Up to RPM	Bore (In)	Key Size (Sq)	# of Teeth	Shipping Wt. (Lbs)
5H30	906700	3700	0.875	0.188	91	7
5H35	906800	3200	1.125	0.250	106	9
5H40	906900	3000	1.250	0.250	122	11
5H45	907000	3000	1.500	0.375	137	15
5H50	907100	3000	1.750	0.375	152	18
5H60	907200	2400	1.938	0.500	183	28
5H70	907300	2000	2.188	0.500	214	40

Bearing life is optimized at lower speeds and air pressure. For higher speeds consult factory.
Keys are customer furnished and must be full-length.

CAUTION!

Tooth clutches are normally engaged when stationary. They are not intended for use in most cyclic applications or high speed engagement. In certain circumstances, tooth clutches can be engaged at differential speeds. Please consult Nexen if you are considering an application involving engagement at differential speeds.

Torque Vs. Air Pressure

5H30, 5H35 & 5H40

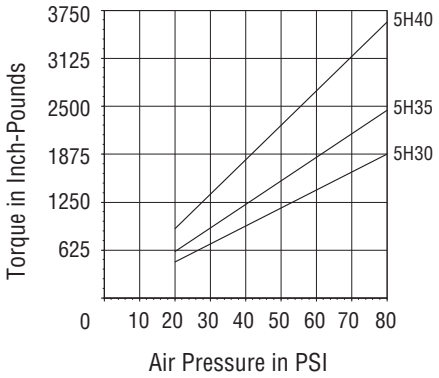

5H45, 5H50, 5H60 & 5H70

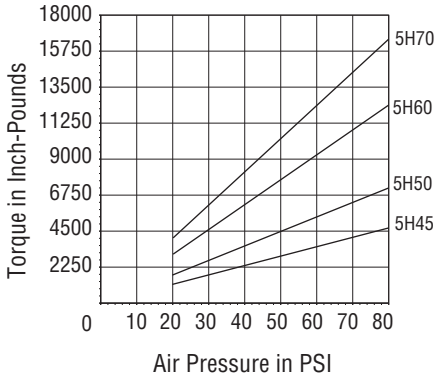

5H SERIES, FLANGE MOUNT TOOTH CLUTCHES - APPROXIMATE DIMENSIONS (INCHES)

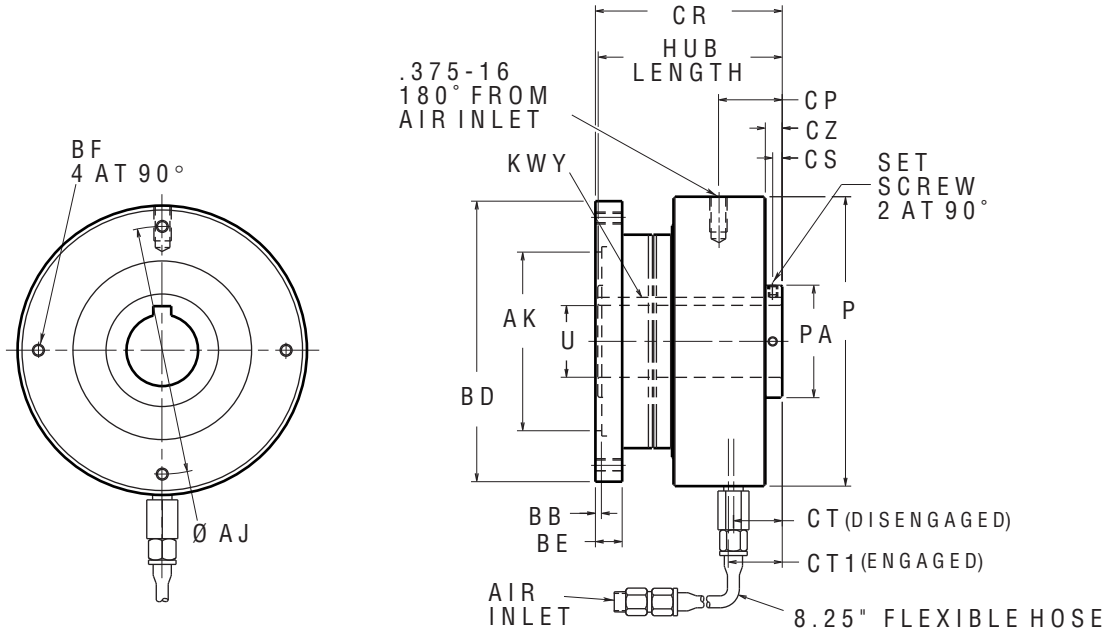

MODEL	PRODUCT NUMBER	AIR INLET NPT	HUB LENGTH	AJ	AK $^{+.001}_{-.000}$	BB	BD ±.001	BE	BF	CP	CR	CS	CT	CT1	CZ	P	PA
5H30	906700	.125	3.28	3.687	2.441	0.13	4.374	0.50	.250-20	--	3.35	0.20	0.92	0.99	0.25	4.56	1.38
5H35	906800	.125	3.42	4.187	2.953	0.11	4.874	0.56	.250-20	--	3.49	0.20	0.95	1.03	0.29	5.06	1.77
5H40	906900	.125	3.51	4.687	2.953	0.13	5.374	0.56	.250-20	--	3.58	0.20	0.93	1.00	0.26	5.31	1.76
5H45	907000	.125	3.85	5.187	3.740	0.13	5.874	0.56	.250-20	--	3.91	0.20	1.02	1.09	0.35	6.06	2.36
5H50	907100	.125	3.99	5.687	3.937	0.14	6.374	0.69	.375-16	--	4.07	0.26	1.15	1.22	0.49	6.56	2.56
5H60	907200	.125	4.48	6.812	4.527	0.17	7.624	0.69	.375-16	--	4.55	0.26	1.33	1.41	0.54	7.56	2.95
5H70	907300	.250	5.11	7.687	5.118	0.37	8.374	0.81	.375-16	1.61	5.18	0.26	1.41	1.51	0.62	8.31	3.34

MODEL	PRODUCT NUMBER	SET SCREW	KEYWAY WD	KEYWAY DP	U $^{+.001}_{-.000}$
5H30	906700	.190-24	0.188	0.094	0.875
5H35	906800	.190-24	0.250	0.125	1.125
5H40	906900	.190-24	0.250	0.125	1.250
5H45	907000	.190-24	0.375	0.188	1.500
5H50	907100	.250-20	0.375	0.188	1.750
5H60	907200	.250-20	0.500	0.250	1.938
5H70	907300	.250-20	0.500	0.250	2.188

5HP SERIES, PILOT MOUNT TOOTH CLUTCH

The 5HP Series provides:

- Instantaneous Torque up to 55,000 In. Lbs. @ 80 psi
- Maximum Operating Speed up to 4,000 rpm
- **15 Bore** sizes ranging from 0.625 to 3.938 inches
- Positive engagement in random positions
- For in-line applications to accommodate misalignment, we recommend use of Nexen Single and Double Flexible Couplings.

10 Models offer design flexibility:

- Sealed, radial ball bearing
- **Pilot Mount** design with tapped mounting holes
- Thru-shaft mounting design uses a full-length keyway
- Ability to mount a pulley, sprocket or gear on the clutch
- Ability to use a Flexible Clutch Coupling for in-line shaft coupling applications
- 8.25 inch flexible hose included.

5HP Series, Pilot Mount Tooth Clutches

Model	Product Number	Speeds Up to RPM	Bore (In)	Key Size WD x DP	# of Teeth	Shipping Wt. (Lbs)	COUPLING ASSEMBLIES SINGLE FLEX Product Number	COUPLING ASSEMBLIES DOUBLE FLEX Product Number
5H20P	911300	4000	0.625	0.188 x 0.188	64	6	--	--
5H30P	909900	3700	0.875	0.188 x 0.188	91	7	909980	909981
5H30P	909912	3700	0.750	0.188 x 0.188	91	7	909980	909981
5H35P	910000	3200	1.125	0.250 x 0.250	106	10	910080	910081
5H35P	910011	3200	1.000	0.250 x 0.250	106	10	910080	910081
5H40P	910100	3000	1.250	0.250 x 0.250	122	12	910180	910181
5H40P	910112	3000	1.188	0.250 x 0.250	122	12	910180	910181
5H45P	910200	3000	1.500	0.375 x 0.375	137	16	910280	910281
5H45P	910211	3000	1.438	0.375 x 0.375	137	16	910280	910281
5H50P	910300	3000	1.750	0.375 x 0.375	152	19	910380	910381
5H50P	910311	3000	1.688	0.375 x 0.375	152	19	910380	910381
5H60P	910400	2400	1.938	0.500 x 0.500	183	30	910480	910481
5H70P	910500	2000	2.188	0.500 x 0.500	214	45	910580	910581
5H80P	911700	2000	2.938	0.750 x 0.500	244	70	911780	911781
5H100P	913100	1000	3.938	1.000 x 0.750	328	170	--	--

Keys are customer furnished and must be full- length.

Attachment Options

Flexible Coupling Assemblies

Flexible Coupling Assemblies are required for in-line coupling applications and are available in single or double flex designs to provide **high misalignment capabilities with high torque**. Turn to pages 84 and 85 for Flexible Coupling details.
For quick selection of Flexible Couplings, refer to the chart above.

Pulleys, Sprockets, Gears

These can be attached to the clutch for offset shaft applications. Tapped holes are provided for ease of mounting. Nexen does not furnish these items.
For minimum sprocket requirements, see page 369.

CAUTION!

Tooth clutches are normally engaged when stationary. They are not intended for use in most cyclic applications or high speed engagement. In certain circumstances, tooth clutches can be engaged at differential speeds. Please consult Nexen if you are considering an application involving engagement at differential speeds.

Torque Vs. Air Pressure

5H20P, 5H30P, 5H35P & 5H40P

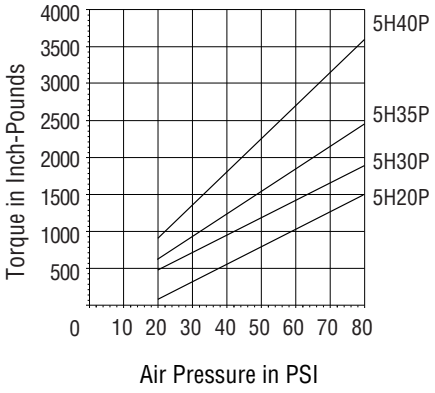

5H45P, 5H50P, 5H60P, 5H70P

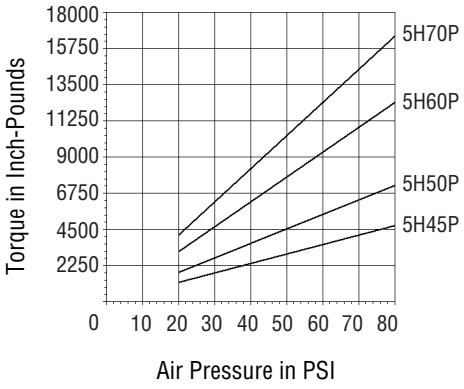

5H80P & 5H100P

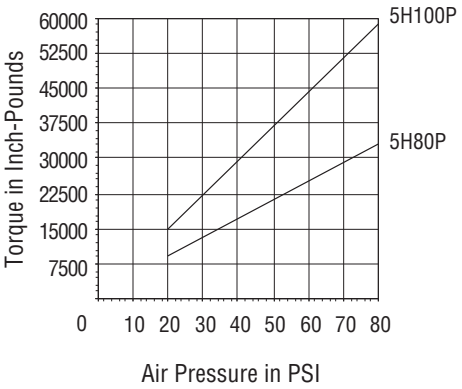

5HP SERIES, PILOT MOUNT TOOTH CLUTCHES - APPROXIMATE DIMENSIONS (INCHES)

Pilot Mount

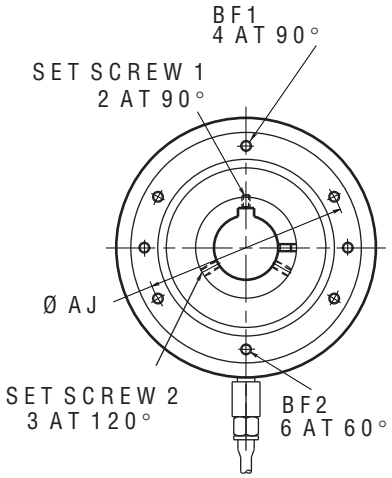

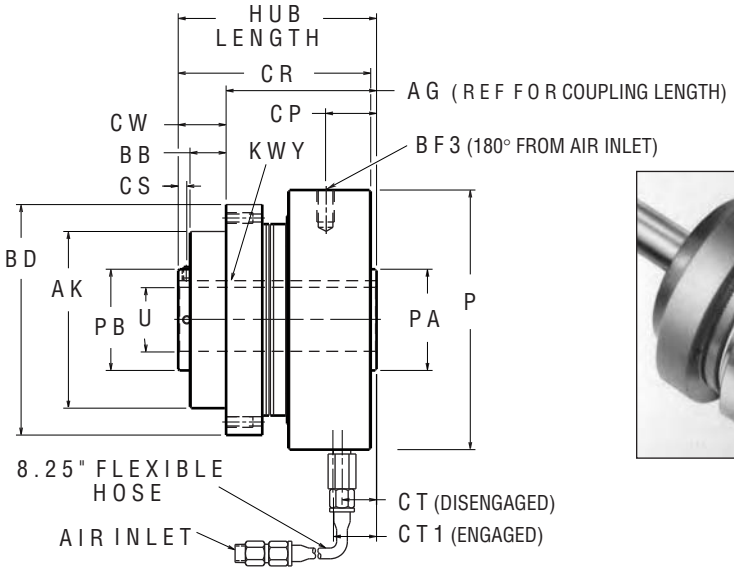

MODEL	PRODUCT NUMBER	AIR INLET NPT	HUB LENGTH	AG	AJ	AK ±.001	BB	BD	BF1	BF2	BF3	CP	CR	CS	CT	CT1	CW	P	PA	PB
5H20P	911300	.125	3.44	2.51	2.750	2.249	0.56	3.12	--	.190-24	--	--	3.75	0.25	0.56	0.62	0.93	3.69	0.98	1.50
5H30P	909900	.125	3.89	2.95	3.437	2.874	0.69	3.88	.250-20	--	--	--	3.85	0.20	0.71	0.78	0.94	4.56	1.38	1.38
5H35P	910000	.125	4.12	3.16	4.062	3.499	0.69	4.50	.250-20	--	--	--	4.06	0.20	0.72	0.80	0.96	5.06	1.77	1.77
5H40P	910100	.125	4.20	3.22	4.250	3.499	0.69	4.88	.250-20	--	--	--	4.17	0.20	0.70	0.76	0.98	5.31	1.76	1.76
5H45P	910200	.125	4.63	3.51	4.750	4.124	0.84	5.38	.250-20	--	--	--	4.49	0.20	0.81	0.88	1.12	6.06	2.36	2.36
5H50P	910300	.125	4.76	3.60	5.250	4.499	0.78	6.00	.312-18	--	--	--	4.61	0.26	0.81	0.88	1.16	6.56	2.56	2.56
5H60P	910400	.125	5.39	4.13	6.125	5.249	0.88	7.00	.312-18	--	--	--	5.18	0.26	1.00	1.08	1.26	7.56	2.95	2.95
5H70P	910500	.250	5.96	4.35	7.000	5.749	1.19	8.25	.500-13	--	.375-16	1.19	5.76	0.26	0.99	1.10	1.61	8.31	3.34	3.34
5H80P	911700	.250	8.62	5.69	8.500	7.374	1.88	9.50	--	.500-13	.375-16	2.26	8.33	0.62	2.27	2.37	2.93	9.25	3.74	5.00
5H100P	913100	.250	10.51	7.46	11.000	8.999	2.00	12.00	--	.500-13	.500-13	3.00	9.46	0.62	3.00	3.07	3.05	12.25	6.50	6.50

MODEL	PRODUCT NUMBER	SET SCREW 1	SET SCREW 2	KEYWAY WD	KEYWAY DP	U +.001 -.000
5H20P	911300	.250-20	--	0.188	0.094	0.625
5H30P	909900	.190-24	--	0.188	0.094	0.875
5H35P	910000	.190-24	--	0.250	0.125	1.125
5H40P	910100	.190-24	--	0.250	0.125	1.250
5H45P	910200	.190-24	--	0.375	0.188	1.500
5H50P	910300	.250-20	--	0.375	0.188	1.750
5H60P	910400	.250-20	--	0.500	0.250	1.937
5H70P	910500	.250-20	--	0.500	0.250	2.187
5H80P	911700	--	.625-11	0.750	0.250	2.937
5H100P	913100	--	.750-10	1.000	0.375	3.937

SINGLE AND DOUBLE FLEXIBLE COUPLING ASSEMBLIES

Both Single and Double Flexible Couplings are available for the 5HP Pilot Mount Tooth Clutch. See the following pages for details.

5HP & 5HP-E CLUTCH FLEXIBLE COUPLING ASSEMBLIES

Couple your shaft to a 5HP or 5HP-E Series Tooth Clutch with a Flexible Coupling Assembly. There are 16 Single Flex and 16 Double Flex Couplings, each designed to fit a specific 5HP or 5HP-E Tooth Clutch. Whatever the design style, you'll get:

- High Misalignment Capability
- Torque ratings up to 32,000 In. Lbs. @ 80 psi
- Nickel-plated surfaces
- Coupling discs made from composite materials provide the benefits of both a steel disc and elastomeric coupling.

Other benefits include:

- Corrosion resistant
- Requires no lubrication
- Coupling adds no backlash to the drive
- Provides torsional stiffness
- Dampens shock and vibration through the power train
- Reverse Bushing Tapers for bushing installation from the inside of the coupling.

Find the Flexible Coupling that matches your clutch and your application specifications on this page.

5HP, 5HP-E Single & Double Flexible Coupling Selection Chart

1. Determine the Tooth Clutch required for your application and find it on the chart below;
2. Find the matching Flexible Coupling Assembly at the top of the column;
3. Double check the Flexible Coupling specifications to ensure conformity with all mating components;
4. A Taper Lock Bushing is required, see chart below for recommended part. This is customer furnished;
5. Clutch and Flexible Coupling Assembly must be ordered separately.

Single Flex #:	909980	910080	910180	910280	910380	910480	910580	911780
Double Flex #:	909981	910081	910181	910281	910381	910481	910581	911781
Model Size:	5H30P	5H35P	5H40P	5H45P	5H50P	5H60P	5H70P	5H80P
Clutch Product #:	909900 909912	910000 910011	910100 910112	910200 910211	910300 910311	910400	910500	911700
Model Size:	5H30P-E	5H35P-E	5H40P-E	5H45P-E	5H50P-E	5H60P-E		
Clutch Product #:	913000	913010	913020	913030	913040	913050		

NOTE: There are no Flexible Couplings for the 5H20P or 5H100P Clutches.

Single & Double Flexible Coupling Product Details

Single Flex Product Number	Double Flex Product Number	Dodge Taper Lock® Bushing Number	Bore Range MIN. (In)	Bore Range MAX. (In)	Single Flex Shipping Wt. (Lbs)	Single Flex Inertia (lb-in/in)	Double Flex Shipping Wt. (Lbs)	Double Flex Inertia (lb-in/in)
909980	909981	1215	0.500	1.250	8	2.6	10	3.2
910080	910081	1615	0.500	1.625	10	6.7	13	8.2
910180	910181	2012	0.500	2.000	12	14.2	15	17.5
910280	910281	2517	0.500	2.500	14	30.2	16	36.3
910380	910381	2517	0.500	2.500	22	54.3	25	64.3
910480	910481	3030	0.938	3.000	29	240.7	34	285.7
910580	910581	3535	1.188	3.938	70	254.0	82	629.3
911780	911781	4040	1.438	4.438	110	293.0	130	726.0

Single Flexible Coupling Misalignment Capacity

Product Number	Angular (Degrees)	Axial (In)	Parallel (In)
909980	1.5	0.065	0.011
910080	1.5	0.070	0.012
910180	1.5	0.080	0.013
910280	1.5	0.090	0.014
910380	1.5	0.105	0.017
910480	1.5	0.120	0.019
910580	1.5	0.135	0.022
911780	1.5	0.155	0.026

Double Flexible Coupling Misalignment Capacity

Product Number	Angular (Degrees)	Axial (In)	Parallel (In)
909981	3.0	0.130	0.063
910081	3.0	0.140	0.078
910181	3.0	0.160	0.085
910281	3.0	0.180	0.091
910381	3.0	0.210	0.104
910481	3.0	0.240	0.117
910581	3.0	0.270	0.137
911781	3.0	0.310	0.170

NOTE: If parallel, angular and axial misalignment are all required, be certain that the combined percentage of each does not exceed 100%. For instance, if 100% of the parallel misalignment rating is required, no angular or axial misalignment is allowed. If 50% of the parallel misalignment rating is required, only 50% of the angular misalignment OR 50% of the axial rating will be available.

Reverse Bushing Tapered Couplings

Single Flex #:	909984	910084	910184	910284	910384	910484	910584	911784
Double Flex #:	909985	910085	910185	910285	910385	910485	910585	911785
Model Size:	5H30P	5H35P	5H40P	5H45P	5H50P	5H60P	5H70P	5H80P
Clutch Product #:	909900 909912	910000 910011	910100 910112	910200 910211	910300 910311	910400	910500	911700
Model Size:	5H30P-E	5H35P-E	5H40P-E	5H45P-E	5H50P-E	5H60P-E		
Clutch Product #:	913000	913010	913020	913030	913040	913050		

NOTE: There are no Flexible Couplings for the 5H20P or 5H100P Clutches.

5HP, 5HP-E SERIES FLEXIBLE COUPLING ASSEMBLIES - APPROXIMATE DIMENSIONS (INCHES)

Single Flex

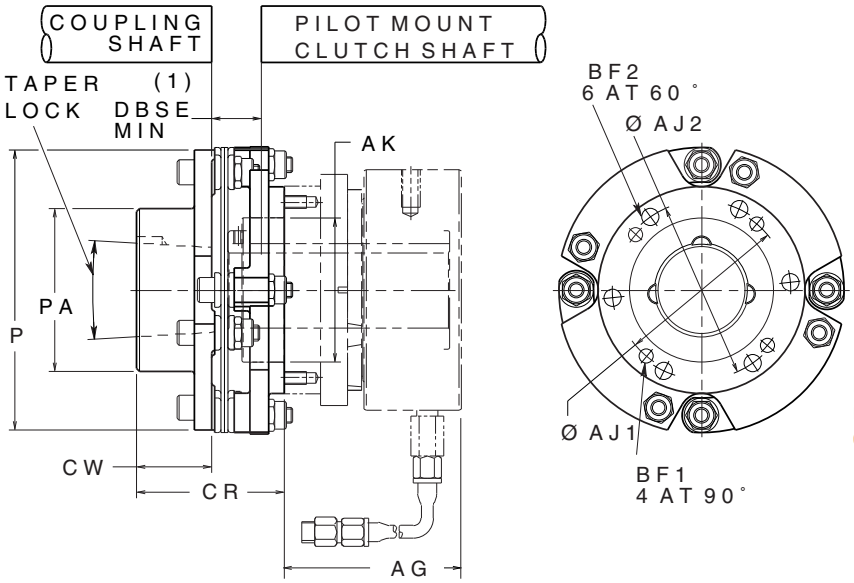

DBSE (1) = Distance Between Shaft Ends. Less than MIN requires equipment removal for service; the MAX distance is dependent on the clutch.

PRODUCT NUMBER	5HP AG	5HP-E AG	AJ1	AJ2	AK +.001 -.000	HOLE SIZE BF1	HOLE SIZE BF2	BF1 BOLT SIZE	BF2 BOLT SIZE	CR	CW	P	PA	DBSE MIN.	DBSE MAX.
909980	2.95	3.80	3.437	3.562	2.875	0.265	0.327	.250-20 x 1.00	.312-18 x 1.25	2.95	1.50	5.75	3.25	0.39	0.51
910080	3.16	3.97	4.062	4.062	3.500	0.265	0.327	.250-20 x 1.00	.312-18 x 1.25	3.17	1.50	6.38	3.88	0.52	0.71
910180	3.22	3.85	4.250	4.250	3.500	0.265	0.327	.250-20 x 1.25	.312-18 x 1.25	2.97	1.25	6.75	4.38	0.59	0.74
910280	3.51	4.35	4.750	4.750	4.125	0.265	0.390	.250-20 x 1.25	.375-16 x 1.50	3.70	1.75	7.25	4.88	0.59	0.83
910380	3.60	4.72	5.250	5.375	4.500	0.327	0.515	.312-18 x 1.25	.500-13 x 1.50	4.61	2.50	8.38	5.00	0.86	1.45
910480	4.13	4.92	6.125	6.125	5.250	0.327	0.515	.312-18 x 1.50	.500-13 x 1.75	5.31	3.00	9.50	5.75	0.88	1.07
910580	4.35	—	7.000	7.000	5.750	0.515	0.640	.500-13 x 1.75	.625-11 x 2.00	6.23	3.53	11.38	6.75	1.02	1.09
911780	5.69	—	8.500	8.500	7.375	0.515	0.640	.500-13 x 2.50	.625-11 x 2.75	7.95	4.12	13.12	7.50	1.06	1.06

Double Flex

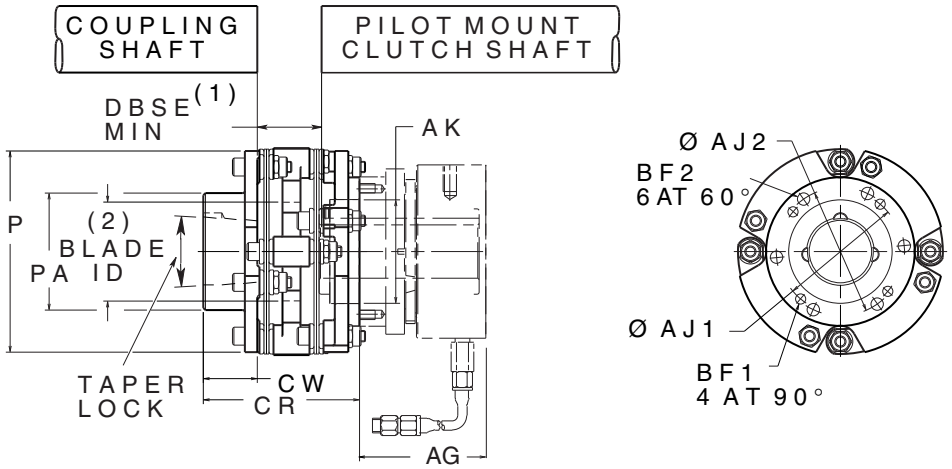

DBSE (1) = Distance Between Shaft Ends. Less than MIN requires equipment removal for service; the MAX distance is dependent on the clutch.

(2) Blade ID is the diameter of the hole in the intermediate member.

PRODUCT NUMBER	5HP AG	5HP-E AG	AJ1	AJ2	AK +.001 -.000	HOLE SIZE BF1	HOLE SIZE BF2	BF1 BOLT SIZE	BF2 BOLT SIZE	CR	CW	P	PA	BLADE ID (2)	DBSE MIN.	DBSE MAX.
909981	2.95	3.80	3.437	3.562	2.875	0.265	0.327	.250-20 x 1.00	.312-18 x 1.25	4.34	1.50	5.75	3.25	2.75	1.78	1.90
910081	3.16	3.97	4.062	4.062	3.500	0.265	0.327	.250-20 x 1.00	.312-18 x 1.25	4.86	1.50	6.38	3.88	3.00	2.20	2.40
910181	3.22	3.85	4.250	4.250	3.500	0.265	0.327	.250-20 x 1.25	.312-18 x 1.25	4.81	1.25	6.75	4.38	3.12	2.44	2.58
910281	3.51	4.35	4.750	4.750	4.125	0.265	0.390	.250-20 x 1.25	.375-16 x 1.50	5.70	1.75	7.25	4.88	3.38	2.59	2.83
910381	3.60	4.72	5.250	5.375	4.500	0.327	0.515	.312-18 x 1.25	.500-13 x 1.50	6.92	2.50	8.38	5.00	4.12	3.17	3.75
910481	4.13	4.92	6.125	6.125	5.250	0.327	0.515	.312-18 x 1.50	.500-13 x 1.75	7.89	3.00	9.50	5.75	4.38	3.45	3.63
910581	4.35	—	7.000	7.000	5.750	0.515	0.640	.500-13 x 1.75	.625-11 x 2.00	9.28	3.53	11.38	6.75	5.25	3.81	4.14
911781	5.69	—	8.500	8.500	7.375	0.515	0.640	.500-13 x 2.50	.625-11 x 2.75	11.72	4.12	13.12	7.50	6.00	4.67	4.67

5HP-E SERIES, ENCLOSED PILOT MOUNT TOOTH CLUTCH

The 5HP-E Series provides:

- Water protection per NEMA standard 1.26.5 (Water-proof machine)
- Instantaneous Torque up to 12,000 In. Lbs. @ 80 psi
- Maximum Operating Speed up to 1,650 rpm
- **6 Bore** sizes ranging from 0.875 to 1.938 inches
- Positive engagements in random positions
- For in-line applications to accommodate misalignment, we recommend use of Nexen Single and Double Flexible Couplings

6 Models offer design flexibility:

- Sealed, radial ball bearings
- **Pilot Mount** design with tapped mounting holes
- Thru-shaft mounting design uses a full-length keyway
- Ability to mount a pulley, sprocket or gear on the clutch
- Ability to use a Flexible Clutch Coupling for the in-line shaft coupling applications
- 8.25 inch hose included.
- Nickel-plated exterior
- For additional corrosion protection, contact the factory

5HP-E, Enclosed Pilot Mount Tooth Clutches–Multiposition

Model	Product Number	Speeds Up to RPM	Bore (In)	Key Size (Sq)	# of Teeth	Shipping Wt. (Lbs)	COUPLING ASSEMBLIES SINGLE FLEX Product Number	COUPLING ASSEMBLIES DOUBLE FLEX Product Number
5H30P-E	913000	1650	0.875	0.188	91	13	909980	909981
5H35P-E	913010	1350	1.125	0.250	106	18	910080	910081
5H40P-E	913020	1350	1.250	0.250	122	19	910180	910181
5H45P-E	913030	1200	1.500	0.375	137	26	910280	910281
5H50P-E	913040	1100	1.750	0.375	152	34	910380	910381
5H60P-E	913050	1000	1.938	0.500	183	47	910480	910481

Keys are customer furnished and must be full-length.

Attachment Options

Flexible Coupling Assemblies

Flexible Coupling Assemblies are required for in-line coupling applications and are available in single or double flex designs to provide **high misalignment capabilities with high torque**. Turn to pages 84 and 85 for Flexible Coupling details.
For quick selection of Flexible Couplings, refer to the chart above.

Pulleys, Sprockets, Gears

These can be attached to the clutch for offset shaft applications. Tapped holes are provided for ease of mounting. Nexen does not furnish these items.
For minimum sprocket requirements, see page 369.

CAUTION!

Tooth clutches are normally engaged when stationary. They are not intended for use in most cyclic applications or high speed engagement. In certain circumstances, tooth clutches can be engaged at differential speeds. Please consult Nexen if you are considering an application involving engagement at differential speeds.

Torque Vs. Air Pressure

5H30P-E, 5H35P-E & 5H40P-E

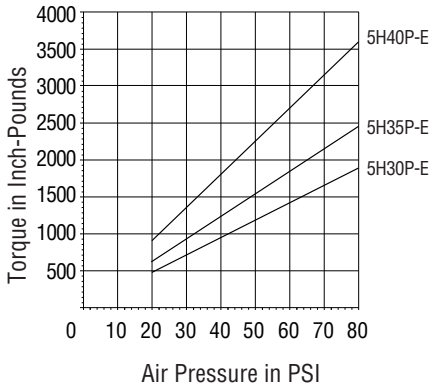

5H45P-E, 5H50P-E & 5H60P-E

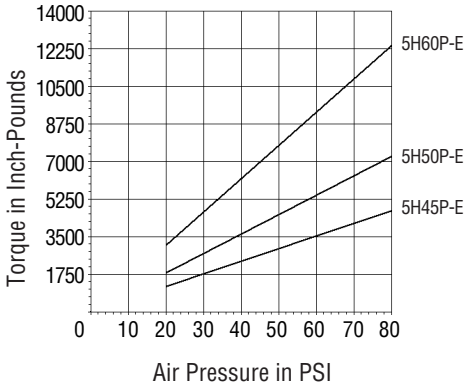

5HP-E SERIES, ENCLOSED PILOT MOUNT TOOTH CLUTCHES - APPROXIMATE DIMENSIONS (INCHES)

Pilot Mount

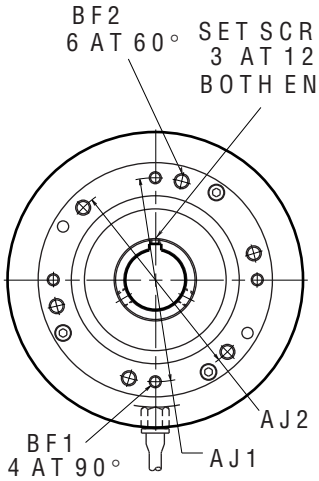

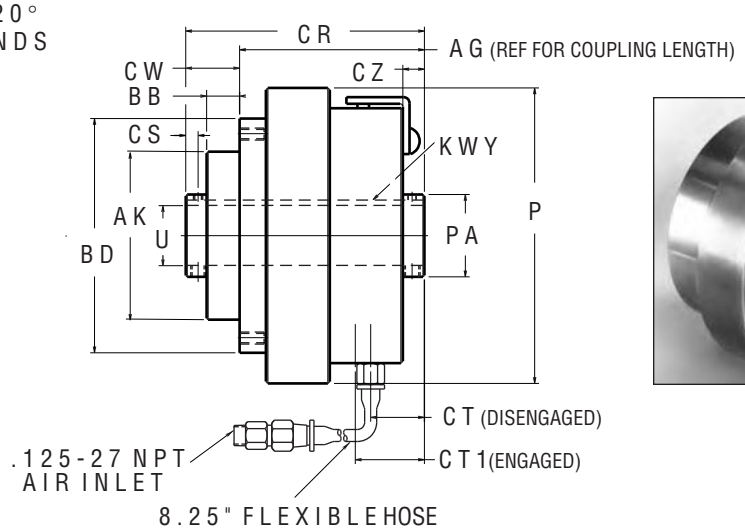

MODEL	PRODUCT NUMBER	AG	AJ1	AJ2	AK $^{+.000}_{-.001}$	BB	BD	BF1	BF2	CR	CS	CT	CT1	CW	CZ	P	PA	KEYWAY WD	KEYWAY DP	U $^{+.001}_{-.000}$
5H30P-E	913000	3.80	3.437	3.562	2.875	0.69	4.12	.250-20	.312-18	4.83	0.23	1.06	1.12	1.03	0.38	5.03	1.34	0.188	0.094	0.875
5H35P-E	913010	3.97	4.062	4.062	3.500	0.69	4.50	.250-20	.312-18	5.10	0.25	1.05	1.12	1.13	0.39	6.16	1.72	0.250	0.125	1.125
5H40P-E	913020	3.85	4.250	4.250	3.500	0.69	4.88	.250-20	.312-18	4.97	0.26	1.12	1.18	1.12	0.45	6.16	1.72	0.250	0.125	1.250
5H45P-E	913030	4.35	4.750	4.750	4.125	0.84	5.40	.250-20	.375-16	5.71	0.31	1.19	1.27	1.36	0.52	6.66	2.31	0.375	0.188	1.500
5H50P-E	913040	4.72	5.250	5.375	4.500	0.78	6.12	.312-18	.500-13	5.97	0.31	1.22	1.33	1.25	0.51	7.66	2.51	0.375	0.188	1.750
5H60P-E	913050	4.92	6.125	6.125	5.250	0.87	7.00	.312-18	.500-13	6.40	0.37	1.45	1.54	1.48	0.66	8.41	2.87	0.500	0.250	1.938

MODEL	PRODUCT NUMBER	SET SCREW	
5H30P-E	913000	(2) .190-24	(4) .312-24
5H35P-E	913010	(2) .190-24	(4) .312-24
5H40P-E	913020	(2) .190-24	(4) .312-24
5H45P-E	913030	(2) .190-24	(4) .312-24
5H50P-E	913040	(2) .250-20	(4) .500-13
5H60P-E	913050	(2) .250-20	(4) .500-13

SINGLE AND DOUBLE FLEXIBLE COUPLING ASSEMBLIES

Both Single and Double Flexible Couplings are available for the 5HP-E Pilot Mount Tooth Clutch. See the following pages for details.

5HP-SP SERIES, PILOT MOUNT TOOTH CLUTCH

The 5HP-SP Series provides:

- Instantaneous Torque up to 32,000 In. Lbs. @ 80 psi
- Maximum Operating Speed up to 3,700 rpm
- **13 Bore** sizes ranging from 0.875 to 2.938 inches
- Positive engagements for accurate positioning and registration
- For in-line applications to accommodate misalignment, we recommend use of Nexen Single and Double Flexible Couplings.

8 Models offer design flexibility:

- Sealed, radial ball bearings
- **Pilot Mount** design with tapped mounting holes
- Thru-Shaft mounting design uses a full-length keyway
- Ability to mount a pulley, sprocket or gear on the clutch
- Ability to use a Flexible Clutch Coupling for in-line shaft coupling applications
- 8.25 inch hose included.

5HP-SP Series, Pilot Mount Tooth Clutches–Single Position

Model	Product Number	Speeds Up to RPM	Bore (In)	Key Size WD x DP	# of Teeth	Shipping Wt. (Lbs)	Coupling Assemblies Single Flex Product Number	Coupling Assemblies Double Flex Product Number
5H30PSP	912100	3700	0.875	0.188 x 0.188	91	7	909980	909981
5H30PSP	912112	3700	0.750	0.188 x 0.188	91	7	909980	909981
5H35PSP	912200	3200	1.125	0.250 x 0.250	106	10	910080	910081
5H35PSP	912213	3200	1.000	0.250 x 0.290	106	10	910080	910081
5H40PSP	912300	3000	1.250	0.250 x 0.250	122	12	910180	910181
5H40PSP	912312	3000	1.188	0.375 x 0.375	122	12	910180	910181
5H45PSP	912400	3000	1.500	0.375 x 0.375	137	16	910280	910281
5H45PSP	912412	3000	1.438	0.375 x 0.375	137	16	910280	910281
5H50PSP	912500	3000	1.750	0.375 x 0.375	152	20	910380	910381
5H50PSP	912512	3000	1.688	0.375 x 0.375	152	20	910380	910381
5H60PSP	912700	2400	1.938	0.500 x 0.500	183	30	910480	910481
5H70PSP	912800	2000	2.188	0.500 x 0.500	214	45	910580	910581
5H80PSP	912900	2000	2.938	0.750 x 0.500	244	70	911780	911781

Keys are customer furnished and must be full-length.

Attachment Options

Flexible Coupling Assemblies

Flexible Coupling Assemblies are required for in-line coupling applications, and are available in single or double flex designs to provide **high misalignment capabilities with high torque.** Turn to pages 90 and 91 for Flexible Coupling details.
For quick selection of Flexible Couplings, refer to the chart above.

Pulleys, Sprockets, Gears

These can be attached to the clutch for offset shaft applications. Tapped holes are provided for ease of mounting. Nexen does not furnish these items.
For minimum sprocket requirements, see page 369.

CAUTION!

Tooth clutches are normally engaged when stationary. They are not intended for use in most cyclic applications or high speed engagement. In certain circumstances, tooth clutches can be engaged at differential speeds. Please consult Nexen if you are considering an application involving engagement at differential speeds.

Min. Static Air Pressure for Engagement Vs. RPM

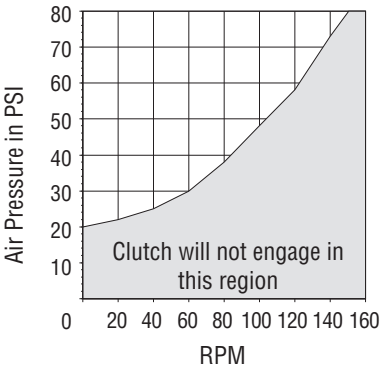

Torque Vs. Air Pressure

5H30PSP, 5H35PSP & 5H40PSP

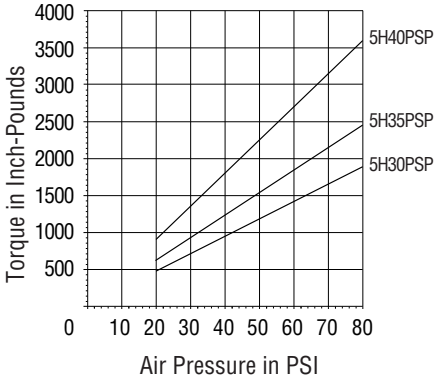

5H45PSP, 5H50PSP, 5H60PSP, 5H70PSP & 5H80PSP

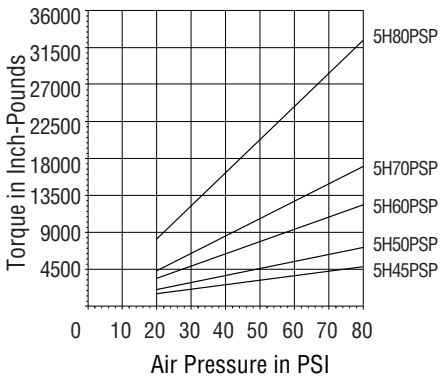

NOTE: Proper Single Position Tooth Clutch engagement depends upon 1) the allowable engagement speed with specific inertia loads and air pressure, and 2) the acceptable speed and air pressure which allow the clutch to engage in one position.

5HP-SP SERIES, PILOT MOUNT TOOTH CLUTCH - APPROXIMATE DIMENSIONS (INCHES)

Pilot Mount

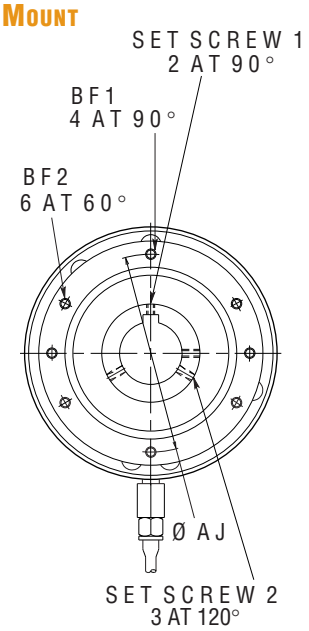

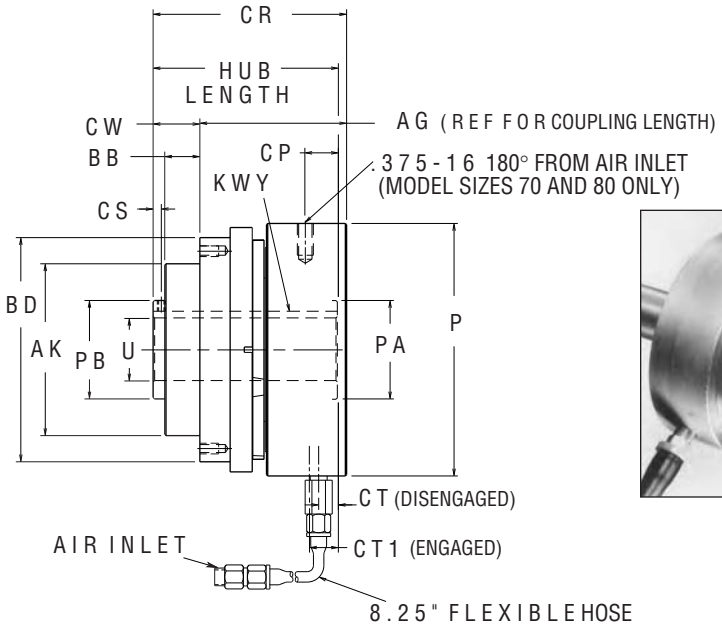

MODEL	PRODUCT NUMBER	AIR INLET NPT	HUB LENGTH	AG	AJ	AK ±.001	BB	BD	BF1	BF2	CP	CR	CS	CT	CT1	CW	P	PA	PB
5H30PSP	912100	.125	3.89	3.09	3.437	2.874	0.69	3.88	.250-20	--	--	4.00	0.20	0.56	0.78	0.91	4.56	1.38	1.38
5H35PSP	912200	.125	4.12	3.25	4.062	3.499	0.69	4.50	.250-20	--	--	4.21	0.20	0.57	0.79	0.96	5.06	1.77	1.77
5H40PSP	912300	.125	4.21	3.35	4.250	3.499	0.69	4.88	.250-20	--	--	4.32	0.20	0.55	0.77	0.97	5.31	1.77	1.77
5H45PSP	912400	.125	4.63	3.52	4.750	4.124	0.84	5.38	.250-20	--	--	4.64	0.20	0.65	0.87	1.12	6.06	2.36	2.36
5H50PSP	912500	.125	4.76	3.60	5.250	4.499	0.78	6.00	.312-18	--	--	4.76	0.26	0.66	0.88	1.16	6.56	2.56	2.56
5H60PSP	912700	.125	5.39	4.08	6.125	5.249	0.87	7.00	.312-18	--	--	5.34	0.26	0.84	1.06	1.26	7.56	2.95	2.95
5H70PSP	912800	.250	5.96	4.46	7.000	5.749	1.00	8.25	.500-13	--	--	5.88	0.26	0.88	1.10	1.42	8.31	3.34	3.34
5H80PSP	912900	.250	8.60	5.74	8.500	7.374	1.88	9.50	--	.500-13	2.16	8.63	0.63	2.18	2.40	2.89	9.25	3.74	5.00

MODEL	PRODUCT NUMBER	SET SCREW 1	SET SCREW 2	KEYWAY WD	KEYWAY DP	U +.001 -.000
5H30PSP	912100	.190-24	--	0.188	0.094	0.875
5H35PSP	912200	.190-24	--	0.250	0.125	1.125
5H40PSP	912300	.190-24	--	0.250	0.125	1.250
5H45PSP	912400	.190-24	--	0.375	0.188	1.500
5H50PSP	912500	.250-20	--	0.375	0.188	1.750
5H60PSP	912700	.250-20	--	0.500	0.250	1.937
5H70PSP	912800	.250-20	--	0.500	0.250	2.187
5H80PSP	912900	--	.625-11	0.750	0.250	2.937

SINGLE AND DOUBLE FLEXIBLE COUPLING ASSEMBLIES

Both Single and Double Flexible Couplings are available for the 5HP-SP Pilot Mount Tooth Clutch. See the following pages for details.

5HP-SP & 5HP-SP-E CLUTCH FLEXIBLE COUPLING ASSEMBLIES

Couple your shaft to a 5HP-SP or 5HP-SP-E Series Tooth Clutch with a Flexible Coupling Assembly. There are 16 Single Flex and 16 Double Flex Couplings, each designed to fit a specific 5HP-SP or 5HP-SP-E Tooth Clutch. Whatever the design style, you'll get:

- High Misalignment Capability
- Torque ratings up to 32,000 In. Lbs. @ 80 psi
- Coupling discs made from composite materials provide the benefits of both a steel disc and elastomeric coupling.

Other benefits include:

- Requires no lubrication
- Coupling adds no backlash to the drive
- Provides torsional stiffness
- Dampens shock and vibration through the power train
- Reverse Bushing Tapers for bushing installation from the inside of the coupling.

Find the Flexible Coupling that matches your clutch and your application specifications on this page.

- Nickel-plated exterior
- For additional corrosion protection, contact the factory

5HP-SP, 5HP-SP-E Single & Double Flexible Coupling Selection Chart

1. Determine the Tooth Clutch required for your application and find it on the chart below;
2. Find the matching Flexible Coupling Assembly at the top of the column;
3. Double check the Flexible Coupling specifications to ensure conformity with all mating components;
4. A Taper Lock Bushing is required, see chart below for recommended part. This is customer furnished;
5. Clutch and Flexible Coupling Assembly must be ordered separately.

Single Flex #:	909980	910080	910180	910280	910380	910480	910580	911780
Double Flex #:	909981	910081	910181	910281	910381	910481	910581	911781
Model Size:	5H30PSP	5H35PSP	5H40PSP	5H45PSP	5H50PSP	5H60PSP	5H70PSP	5H80PSP
Clutch Product #:	912100	912200	912300	912400	912500	912700	912800	912900
	912112	912213	912312	912412	912512			
Model Size:	5H30PSP-E	5H35PSP-E	5H40PSP-E	5H45PSP-E	5H50PSP-E	5H60PSP-E		
Clutch Prod.#:	913002	913012	913022	913032	913042	913052		

Single & Double Flexible Coupling Product Details

Single Flex Product Number	Double Flex Product Number	Dodge Taper Lock® Bushing Number	Bore Range MIN. (In)	Bore Range MAX. (In)	Single Flex Shipping Wt. (Lbs)	Double Flex Shipping Wt. (Lbs)
909980	909981	1215	0.500	1.250	8	10
910080	910081	1615	0.500	1.625	10	13
910180	910181	2012	0.500	2.000	12	15
910280	910281	2517	0.500	2.500	14	16
910380	910381	2517	0.500	2.500	22	25
910480	910481	3030	0.938	3.000	29	34
910580	910581	3535	1.188	3.938	70	82
911780	911781	4040	1.438	4.438	110	130

Single Flexible Coupling Misalignment Capacity

Product Number	Angular (Degrees)	Axial (In)	Parallel (In)
909980	1.5	0.065	0.011
910080	1.5	0.070	0.012
910180	1.5	0.080	0.013
910280	1.5	0.090	0.014
910380	1.5	0.105	0.017
910480	1.5	0.120	0.019
910580	1.5	0.135	0.022
911780	1.5	0.155	0.026

Double Flexible Coupling Misalignment Capacity

Product Number	Angular (Degrees)	Axial (In)	Parallel (In)
909981	3.0	0.130	0.063
910081	3.0	0.140	0.078
910181	3.0	0.160	0.085
910281	3.0	0.180	0.091
910381	3.0	0.210	0.104
910481	3.0	0.240	0.117
910581	3.0	0.270	0.137
911781	3.0	0.310	0.170

NOTE: If parallel, angular and axial misalignment are all required, be certain that the combined percentage of each does not exceed 100%. For instance, if 100% of the parallel misalignment rating is required, no angular or axial misalignment is allowed. If 50% of the parallel misalignment rating is required, only 50% of the angular misalignment OR 50% of the axial rating will be available.

Reverse Bushing Tapered Couplings

Single Flex #:	909984	910084	910184	910284	910384	910484	910584	911784
Double Flex #:	909985	910085	910185	910285	910385	910485	910585	911785
Model Size:	5H30PSP	5H35PSP	5H40PSP	5H45PSP	5H50PSP	5H60PSP	5H70PSP	5H80PSP
Clutch Product #:	912100	912200	912300	912400	912500	912700	912800	912900
	912112	912213	912312	912412	912512			
Model Size:	5H30PSP-E	5H35PSP-E	5H40PSP-E	5H45PSP-E	5H50PSP-E	5H60PSP-E		
Clutch Prod. #:	913002	913012	913022	913032	913042	913052		

5HP-SP, 5HP-SP-E SERIES FLEXIBLE COUPLING ASSEMBLIES - APPROX. DIMENSIONS (INCHES)

Single Flex

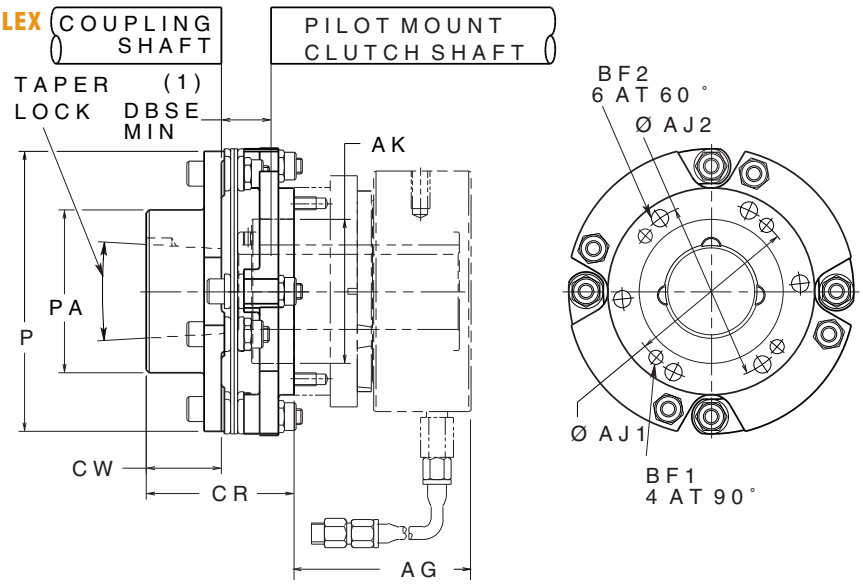

DBSE (1) = Distance Between Shaft Ends. Less than MIN requires equipment removal for service; the MAX distance is dependent on the clutch.

PRODUCT NUMBER	5HP-SP AG	5HP-SP-E AG	AJ1	AJ2	AK +.001 -.000	HOLE SIZE BF1	HOLE SIZE BF2	BF1 BOLT SIZE	BF2 BOLT SIZE	CR	CW	P	PA	DBSE MIN.	DBSE MAX.
909980	3.09	3.80	3.437	3.562	2.875	0.265	0.327	.250-20 x 1.00	.312-18 x 1.25	2.95	1.50	5.75	3.25	0.39	0.51
910080	3.25	3.97	4.062	4.062	3.500	0.265	0.327	.250-20 x 1.00	.312-18 x 1.25	3.17	1.50	6.38	3.88	0.52	0.71
910180	3.35	3.85	4.250	4.250	3.500	0.265	0.327	.250-20 x 1.25	.312-18 x 1.25	2.97	1.25	6.75	4.38	0.59	0.74
910280	3.52	4.35	4.750	4.750	4.125	0.265	0.390	.250-20 x 1.25	.375-16 x 1.50	3.70	1.75	7.25	4.88	0.59	0.83
910380	3.60	4.72	5.250	5.375	4.500	0.327	0.515	.312-18 x 1.25	.500-13 x 1.50	4.61	2.50	8.38	5.00	0.86	1.45
910480	4.08	4.92	6.125	6.125	5.250	0.327	0.515	.312-18 x 1.50	.500-13 x 1.75	5.31	3.00	9.50	5.75	0.88	1.07
910580	4.46	—	7.000	7.000	5.750	0.515	0.640	.500-13 x 1.75	.625-11 x 2.00	6.23	3.53	11.38	6.75	1.02	1.09
911780	5.74	—	8.500	8.500	7.375	0.515	0.640	.500-13 x 2.50	.625-11 x 2.75	7.95	4.12	13.12	7.50	1.06	1.06

Double Flex

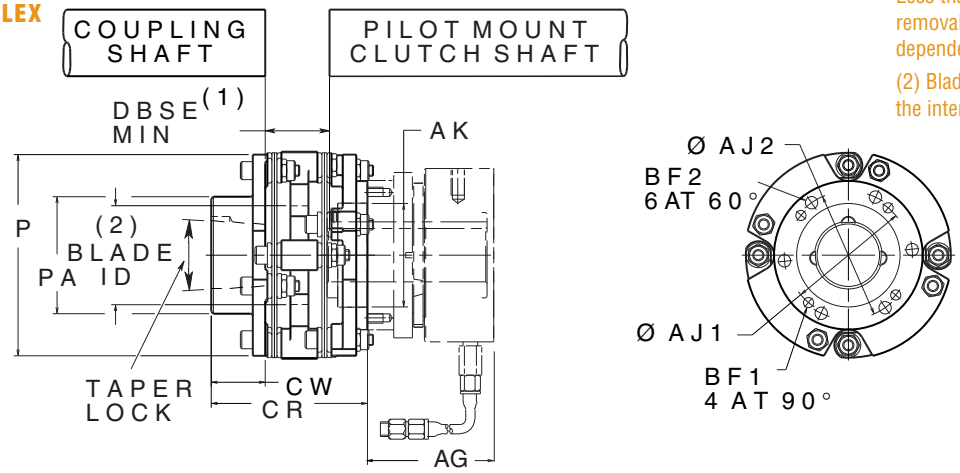

DBSE (1) = Distance Between Shaft Ends. Less than MIN requires equipment removal for service; the MAX distance is dependent on the clutch.

(2) Blade ID is the diameter of the hole in the intermediate member.

PRODUCT NUMBER	5HP-SP AG	5HP-SP-E AG	AJ1	AJ2	AK +.001 -.000	HOLE SIZE BF1	HOLE SIZE BF2	BF1 BOLT SIZE	BF2 BOLT SIZE	CR	CW	P	PA	BLADE ID (2)	DBSE MIN.	DBSE MAX.
909981	3.09	3.80	3.437	3.562	2.875	0.265	0.327	.250-20 x 1.00	.312-18 x 1.25	4.34	1.50	5.75	3.25	2.75	1.78	1.90
910081	3.25	3.97	4.062	4.062	3.500	0.265	0.327	.250-20 x 1.00	.312-18 x 1.25	4.86	1.50	6.38	3.88	3.00	2.20	2.40
910181	3.35	3.83	4.250	4.250	3.500	0.265	0.327	.250-20 x 1.25	.312-18 x 1.25	4.81	1.25	6.75	4.38	3.12	2.44	2.58
910281	3.52	4.35	4.750	4.750	4.125	0.265	0.390	.250-20 x 1.25	.375-16 x 1.50	5.70	1.75	7.25	4.88	3.38	2.59	2.83
910381	3.60	4.72	5.250	5.375	4.500	0.327	0.515	.312-18 x 1.25	.500-13 x 1.50	6.92	2.50	8.38	5.00	4.12	3.17	3.75
910481	4.08	4.92	6.125	6.125	5.250	0.327	0.515	.312-18 x 1.50	.500-13 x 1.75	7.89	3.00	9.50	5.75	4.38	3.45	3.63
910581	4.46	—	7.000	7.000	5.750	.515	.640	.500-13 x 1.75	.625-11 x 2.00	9.28	3.53	11.38	6.75	5.25	3.81	4.14
911781	5.74	—	8.500	8.500	7.375	.515	.640	.500-13 x 2.50	.625-11 x 2.75	11.72	4.12	13.12	7.50	6.00	4.67	4.67

5HP-SP-E SERIES, ENCLOSED PILOT MOUNT TOOTH CLUTCH

The 5HP-SP-E Series provides:

- Water protection per NEMA standard 1.26.5 (Water-proof machine)
- Instantaneous Torque up to 12,000 In. Lbs. @ 80 psi
- Maximum Operating Speed up to 1,650 rpm
- **6 Bore** sizes ranging from 0.875 to 1.938 inches
- Positive engagement for accurate position and registration
- For in-line applications to accommodate misalignment, we recommend use of Nexen Single and Double Flexible Couplings.

6 Models offer design flexibility:

- Sealed, radial ball bearings
- **Pilot Mount** design with tapped mounting holes
- Thru-shaft mounting design uses a full-length keyway
- Ability to mount a pulley, sprocket or gear on the clutch
- Ability to use a Flexible Clutch Coupling for the in-line shaft coupling applications
- 8.25 inch hose included.
- Nickel-plated exterior
- For additional corrosion protection, contact the factory

5HP-SP-E, Enclosed Pilot Mount Tooth Clutches–Single position

Model	Product Number	Speeds Up to RPM	Bore (In)	Key Size (SQ)	# of Teeth	Shipping Wt. (Lbs)	COUPLING ASSEMBLIES SINGLE FLEX Product Number	COUPLING ASSEMBLIES DOUBLE FLEX Product Number
5H30PSP-E	913002	1650	0.875	0.188	91	7	909980	909981
5H35PSP-E	913012	1350	1.125	0.250	106	10	910080	910081
5H40PSP-E	913022	1350	1.250	0.250	122	12	910180	910181
5H45PSP-E	913032	1200	1.500	0.375	137	16	910280	910281
5H50PSP-E	913042	1100	1.750	0.375	152	20	910380	910381
5H60PSP-E	913052	1000	1.938	0.500	183	30	910480	910481

Keys are customer furnished and must be ful- length.

Attachment Options

Flexible Coupling Assemblies

Flexible Coupling Assemblies are required for in-line coupling applications and are available in single or double flex designs to provide **high misalignment capabilities with high torque**. Turn to pages 90 and 91 for Flexible Coupling details.
For quick selection of Flexible Couplings, refer to the chart above.

Pulleys, Sprockets, Gears

These can be attached to the clutch for off set shaft applications. Tapped holes are provided for ease of mounting. Nexen does not furnish these items.
For minimum sprocket requirements, see page 369.

CAUTION!

Tooth clutches are normally engaged when stationary. They are not intended for use in most cyclic applications or high speed engagement. In certain circumstances, tooth clutches can be engaged at differential speeds. Please consult Nexen if you are considering an application involving engagement at differential speeds.

Torque Vs. Air Pressure

5H30PSP-E, 5H35PSP-E & 5H40PSP-E

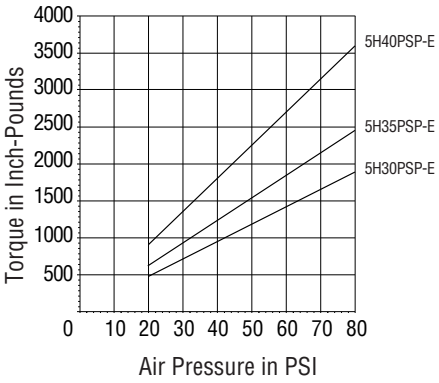

5H45PSP-E, 5H50PSP-E & 5H60PSP-E

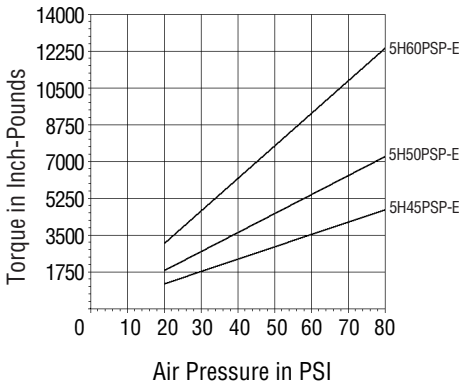

Min. Static Air Pressure for Engagement Vs. RPM

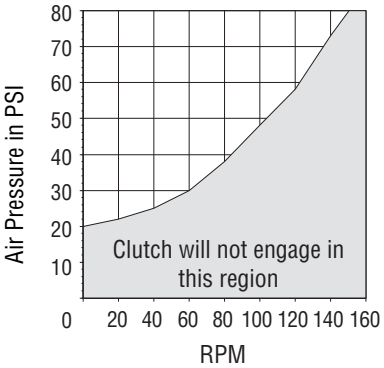

NOTE: Proper Single Position Tooth Clutch engagement depends upon 1) the allowable engagement speed with specific inertia loads and air pressure, and 2) the acceptable speed and air pressure which allow the clutch to engage in one position.

5HP-SP-E SERIES, ENCLOSED PILOT MOUNT TOOTH CLUTCHES - APPROXIMATE DIMENSIONS (INCHES)

Pilot Mount

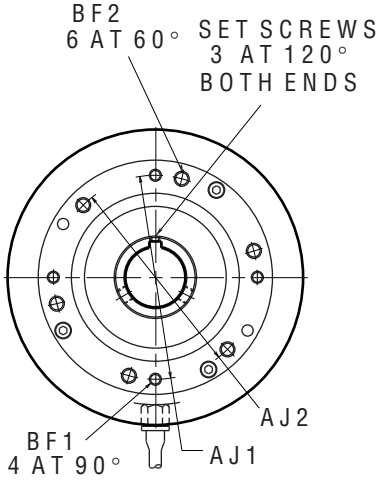

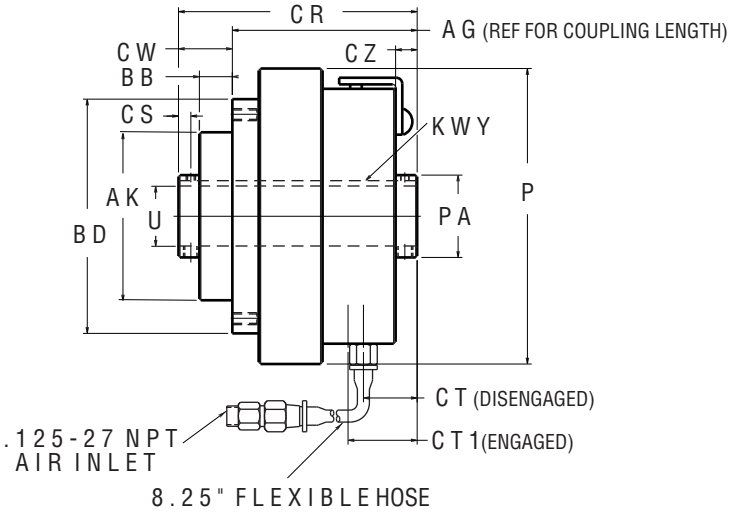

MODEL	PRODUCT NUMBER	AG	AJ1	AJ2	AK +.000 -.001	BB	BD	BF1	BF2	CR	CS	CT	CT1	CW	CZ	P	PA	KEYWAY WD	KEYWAY DP	U +.001 -.000
5H30PSP-E	913002	3.80	3.437	3.562	2.875	0.69	4.12	.250-20	.312-18	4.83	0.23	1.06	1.27	1.03	0.38	5.03	1.34	0.188	0.094	0.875
5H35PSP-E	913012	3.97	4.062	4.062	3.500	0.69	4.50	.250-20	.312-18	5.10	0.25	1.05	1.27	1.13	0.39	6.16	1.72	0.250	0.125	1.125
5H40PSP-E	913022	3.85	4.250	4.250	3.500	0.69	4.88	.250-20	.312-18	4.97	0.26	1.12	1.34	1.12	0.45	6.16	1.72	0.250	0.125	1.250
5H45PSP-E	913032	4.35	4.750	4.750	4.125	0.84	5.40	.250-20	.375-16	5.71	0.31	1.19	1.41	1.36	0.52	6.66	2.31	0.375	0.188	1.500
5H50PSP-E	913042	4.72	5.250	5.375	4.500	0.78	6.12	.312-18	.500-13	5.97	0.31	1.22	1.48	1.25	0.51	7.66	2.51	0.375	0.188	1.750
5H60PSP-E	913052	4.92	6.125	6.125	5.250	0.87	7.00	.312-18	.500-13	6.40	0.37	1.45	1.67	1.48	0.66	8.41	2.87	0.500	0.250	1.938

MODEL	PRODUCT NUMBER	SET SCREW	
5H30PSP-E	913002	(2) .190-24	(4) .312-24
5H35PSP-E	913012	(2) .190-24	(4) .312-24
5H40PSP-E	913022	(2) .190-24	(4) .312-24
5H45PSP-E	913032	(2) .190-24	(4) .312-24
5H50PSP-E	913042	(2) .250-20	(4) .500-13
5H60PSP-E	913052	(2) .250-20	(4) .500-13

SINGLE AND DOUBLE FLEXIBLE COUPLING ASSEMBLIES

Both Single and Double Flexible Couplings are available for the 5HPSP-E Pilot Mount Tooth Clutch. See the following pages for details.

5HS SERIES, SPROCKET TOOTH CLUTCHES

The 5HS Series Provides:

- Torque capacity up to 3500 In. Lbs. @ 80 psi
- Maximum Operating Speed up to 4000 rpm
- **3 Bore** sizes ranging from 0.625 to 1.250 inches
- Positive engagement without slippage
- Bi-directional operation
- Adjustable torque by varying air pressure
- Sprocket mount capability
- Static air pressure operation
- Small, light weight durability
- 5 inch or 8.25 inch hose included

3 Models offer design flexibility:

- 1 Integral Single Sprocket design
- 2 Integral Double/Single Sprocket designs

These clutches are ideal for in-line, zoned conveyor applications, as well as other applications that require bi-directional movement.

5HS Series, Sprocket Tooth Clutches

Model	Product Number	Sprocket	Bore (In)	Speeds Up to RPM	Key Size (SQ)	SPROCKET SPECS Chain Size	Pitch	# of Teeth	Shipping Wt. (Lbs)
5H20S	911386	single	0.625	4000	0.188	40	0.500	18	10
5H30S	911310	double/single	1.000	3700	0.250	50	0.625	20	18
5H40S	911320	double/single	1.250	3000	0.250	60	0.750	21	40

Keys are customer furnished and must be full length.

Torque Vs. Air Pressure

5H20S

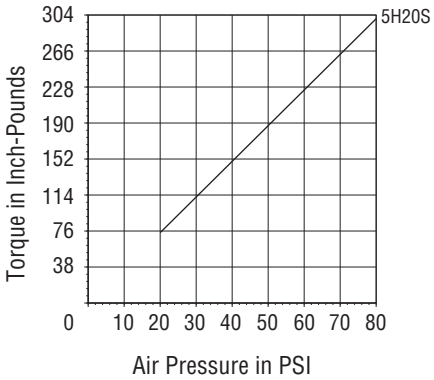

5H30S & 5H40S

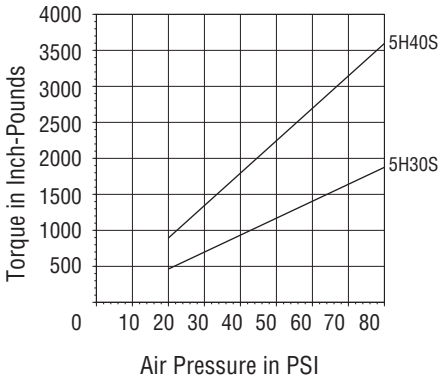

5HS SERIES, SPROCKET TOOTH CLUTCHES - APPROXIMATE DIMENSIONS (INCHES)

Sprocket Mount
5H20S

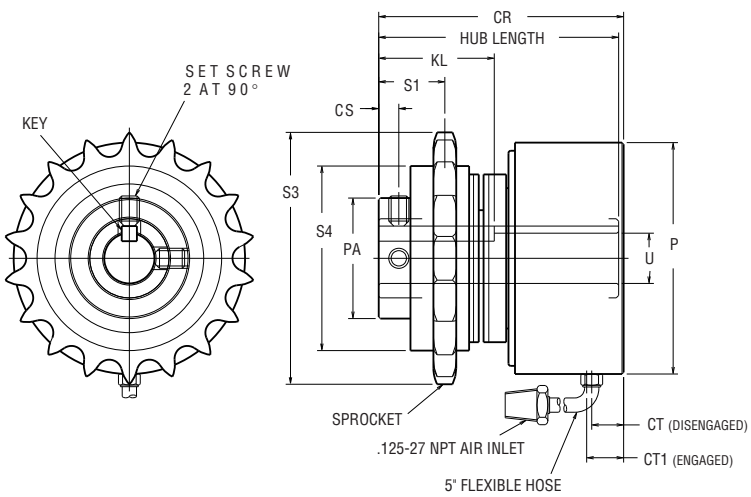

MODEL	PRODUCT NUMBER	HUB LENGTH	SPROCKET CHAIN SIZE	SPROCKET PITCH	SPROCKET #OF TEETH	SET SCREW	CR	CS	CT	CT1	KEY (SQ)	KL	P	PA	S1	S3	S4	U +.001 -.000
5H20S	911386	2.99	40	0.500	18	.250-20	3.05	0.25	0.40	0.46	0.188	1.44	2.88	1.50	0.82	3.14	2.30	0.625

Sprocket Mount
5H30S & 5H40S

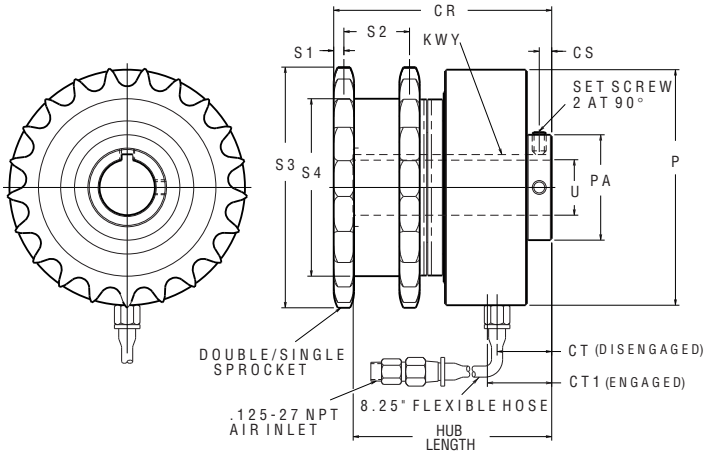

MODEL	PRODUCT NUMBER	HUB LENGTH	SPROCKET CHAIN SIZE	SPROCKET PITCH	SPROCKET # OF TEETH	SET SCREW	KEYWAY WD	KEYWAY DP	CR	CS	CT	CT1	P	PA	S1	S2	S3	S4	U +.001 -.000
5H30S	911310	4.17	50	0.625	20	.250-20	0.125	0.250	4.53	0.25	1.22	1.30	4.56	1.38	0.17	1.31	4.32	3.12	1.000
5H40S	911320	4.48	60	0.750	21	.312-18	0.125	0.250	4.91	0.28	1.23	1.31	5.31	2.38	0.23	1.48	5.43	4.00	1.250

5HP-SE SERIES, SPRING ENGAGED TOOTH CLUTCHES, PILOT & FLANGE MOUNT MODELS

The 5HP-SE Series provides:

- Spring engaged, Air released
- Instantaneous Torque up to 8,230 In. Lbs.
- Maximum Operating Speed up to 3,200 rpm, Pilot Mount and 3,700 rpm, Flange Mount
- **Bore sizes:**

  Pilot Mount: 8 sizes from .875 to 1.938. Flange Mount: sizes 0.875 and 1.750 inches
- Positive engagements in multiple positions
- Immediate start-up with no slippage
- Versatile mounting capability for bearing supported pulley, sprocket or gear
- For Pilot Mount in-line applications to accommodate misalignment, we recommend use of Nexen Single and Double Flexible Couplings.

10 Models offer design flexibility:

- Designed with tapped mounting holes
- Sealed, radial ball bearings
- Thru-shaft mounting design uses a full-length keyway
- Pilot Mount offers ability to mount a pulley, sprocket or gear on the clutch
- Pilot Mount offers ability to use a Flexible Clutch Coupling for in-line shaft coupling applications
- 8.25 inch hose included.

5HP-SE Series, Pilot Mount Spring Engaged Tooth Clutches

Model	Product Number	Speeds Up to RPM	Bore (In)	Key Size WD x DP	# of Teeth	Shipping Wt. (Lbs)	Torque (In. Lbs.)	Disengagement Pressure
5H35PSE	910091	3200	1.000	0.250 x 0.250	106	10	1480	45
5H35PSE	910093	3200	.875	0.250 x 0.250	106	10	1480	45
5H35PSE	910094	3200	25mm	8mm x 8mm	106	10	1480	45
5H45PSE-E	910204	3000	1.500	0.375 x 0.375	137	16	3650	70
5H50PSE	910304	3000	1.500	0.375 x 0.375	152	19	8230	105
5H60PSE	910404	2400	1.938	0.500 x 0.500	183	30	6790	40
5H60PSE	910407	2400	1.625	0.500 x 0.500	183	30	6790	40
5H60PSP-SE	912705	2400	1.938	0.500 x 0.500	183	30	6790	62

Keys are customer furnished and must be full- length.

5H-SE Series, Flange Mount Spring Engaged Tooth Clutches

Model	Product Number	Speeds Up to RPM	Bore (In)	Key Size WD x DP	# of Teeth	Shipping Wt. (Lbs)	Torque (In. Lbs.)
5H30SE	906701	3700	0.875	0.188 x 0.188	91	7	880
5H50SE	907101	3000	1.750	0.375 x 0.375	152	18	8230

Bearing life is optimized at lower speeds and air pressure. For higher speeds consult factory.
Keys are customer furnished and must be full-length.

Attachment Options (Pilot Mount Series)

Flexible Coupling Assemblies

Flexible Coupling Assemblies are required for in-line coupling applications and are available in single or double flex designs to provide **high misalignment capabilities with high torque**. Turn to pages 84 and 85 for Flexible Coupling details.
For quick selection of Flexible Couplings, refer to the chart above.

Pulleys, Sprockets, Gears

These can be attached to the clutch for offset shaft applications. Tapped holes are provided for ease of mounting. Nexen does not furnish these items.
For minimum sprocket requirements, see page 369

CAUTION!

Tooth clutches are normally engaged when stationary. They are not intended for use in most cyclic applications or high speed engagement. In certain circumstances, tooth clutches can be engaged at differential speeds. Please consult Nexen if you are considering an application involving engagement at differential speeds.

SINGLE AND DOUBLE FLEXIBLE COUPLING ASSEMBLIES

Both Single and Double Flexible Couplings are available for the 5HP Pilot Mount Tooth Clutch. See the following pages for details.

5HP-SE SERIES, SPRING ENGAGED TOOTH CLUTCHES - APPROXIMATE DIMENSIONS (INCHES)

Pilot Mount

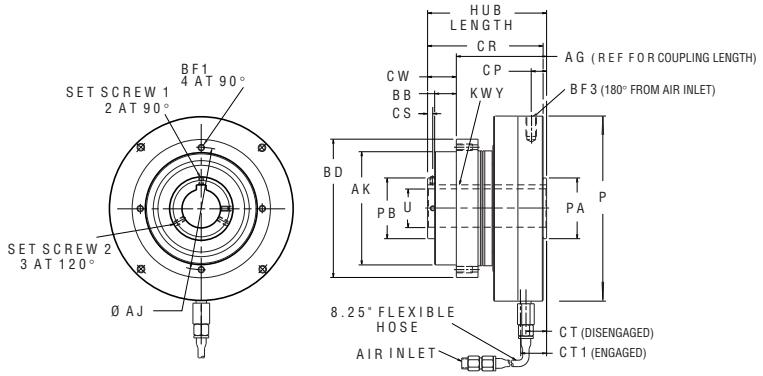

MODEL	PRODUCT NUMBER	AIR INLET NPT	HUB LENGTH	AG	AJ	AK ±.001	BB	BD	BF1	CR	CS	CT	CT1	CW	P	PA
5H35PSE	910091	.125	4.37	3.16	4.062	3.499	0.69	4.50	.250-20	4.06	0.20	0.72	0.80	0.96	6.13	1.77
5H35PSE	910093	.125	4.37	3.16	4.062	3.499	0.69	4.50	.250-20	4.06	0.20	0.72	0.80	0.96	6.13	1.77
5H35PSE	910094	.125	4.37	3.16	4.062	3.499	0.69	4.50	.250-20	4.06	0.20	0.72	0.80	0.96	6.13	1.77
5H45PSE-E	910204	.125	5.40	3.51	4.750	4.124	0.84	5.38	.250-20	4.49	0.20	0.81	0.88	1.12	7.25	2.36
5H50PSE	910304	.125	4.76	3.60	5.250	4.499	0.78	6.00	.312-18	4.61	0.26	1.57	0.88	1.16	7.75	2.56
5H60PSE	910404	.125	5.39	4.13	6.125	5.249	0.88	7.00	.312-18	5.18	0.26	1.75	1.08	1.26	9.31	2.95
5H60PSE	910407	.250	5.39	4.13	6.125	5.249	0.88	7.00	.312-18	5.18	0.26	1.00	1.08	1.26	9.31	2.95
5H60PSP-SE	912705	.250	5.39	4.13	6.125	5.249	0.88	7.00	.312-18	5.18	0.62	1.00	1.08	1.26	9.31	2.95

MODEL	PRODUCT NUMBER	PB	SET SCREW	KEYWAY WD ±.001	KEYWAY DP ±.005	U +.001 -.000
5H35PSE	910091	1.77	.190-24	0.250	.125	1.000
5H35PSE	910093	1.77	.190-24	0.250	.125	0.875
5H35PSE	910094	1.77	.190-24	8mm	4mm	25mm
5H45PSE-E	910204	2.36	.190-24	0.375	.188	1.500
5H50PSE	910304	2.56	.250-20	0.375	.188	1.500
5H60PSE	910404	2.95	.250-20	0.500	.250	1.938
5H60PSE	910407	2.95	.250-20	0.500	.250	1.625
5H60PSP-SE	912705	2.95	.250-20	1.000	.250	1.938

Flange Mount

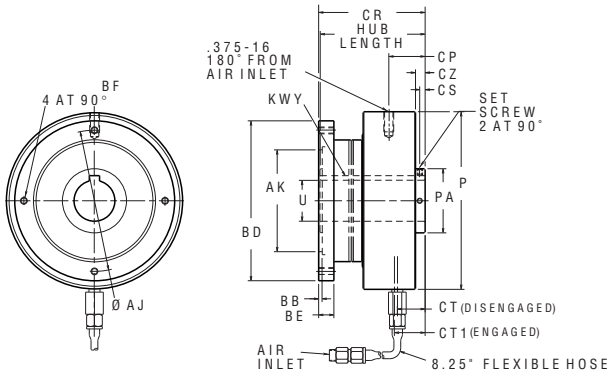

MODEL	PRODUCT NUMBER	AIR INLET NPT	HUB LENGTH	AJ	AK +.001 -.000	BB	BD ±.001	BE	BF	CR	CS	CT	CT1	CZ	P	PA
5H30SE	906701	.125	3.28	3.687	2.441	0.14	4.374	0.50	.250-20	3.35	0.20	0.92	0.99	0.25	5.31	1.38
5H50SE	907101	.125	3.99	5.687	3.937	0.14	6.374	0.69	.375-16	4.07	0.26	1.15	1.22	0.49	7.75	2.56

MODEL	PRODUCT NUMBER	SET SCREW	KEYWAY WD	KEYWAY DP	U +.001 -.000
5H30SE	906701	.190-24	0.188	.094	0.875
5H50SE	907101	.250-20	0.375	.188	1.750

METRIC 5H SERIES, FLANGE MOUNT TOOTH CLUTCHES

The Metric 5H Series provides:

- Instantaneous Torque up to 2,000 Nm
- Maximum Operating Speed up to 3700 rpm
- **7 Standard Bore** sizes ranging from 20 to 55 millimeters
- **7 Minimum Bore** sizes ranging from 12,7 to 47,6 millimeters–you machine and assemble
- Positive engagement in multiple positions
- Immediate start-up with no slippage
- Versatile Mounting Capability for bearing supported pulley, sprocket or gear.

7 Models offer design flexibility:

- Sealed, radial ball bearings
- **Pilot Mount** design with tapped mounting holes
- Thru-shaft mounting design uses a full-length keyway
- 222 millimeter hose included.

METRIC 5H SERIES, FLANGE MOUNT TOOTH CLUTCHES—MULTIPOSITION

Standard Bore Clutch:

Model	Product Number	Speeds Up to RPM	Bore (mm)	KEYWAY WD x DP	# of Teeth	Shipping Wt. (kg)
5H30	906703	3700	20	6 x 2,8	91	3,2
5H35	906802	3200	25	8 x 3,3	106	4,1
5H40	906902	3000	30	8 x 3,3	122	5
5H45	907002	3000	35	10 x 3,3	137	7
5H50	907103	3000	40	12 x 3,3	152	8,1
5H60	907202	2400	45	14 x 3,8	183	13
5H70	907302	2000	55	16 x 4,3	214	18

Keys are customer furnished and must be full-length.
Bearing life is optimized at lower speeds and air pressure.

Minimum Bore Clutch:

Minimum bore clutches are supplied unassembled with machinable hubs.

Model	Product Number	Speeds Up to RPM	Bore (mm)	# of Teeth	Shipping Wt. (kg)
5H30	906704	3700	12,7	91	3,2
5H35	906803	3200	15,9	106	4,1
5H40	906903	3000	19,1	122	5
5H45	907003	3000	22,2	137	7
5H50	907104	3000	25,4	152	8,1
5H60	907203	2400	31,8	183	13
5H70	907303	2000	47,6	214	18

Keys are customer furnished and must be full-length.

CAUTION!

Tooth clutches are normally engaged when stationary. They are not intended for use in most cyclic applications or high speed engagement. In certain circumstances, tooth clutches can be engaged at differential speeds. Please consult Nexen if you are considering an application involving engagement at differential speeds.

TORQUE VS. AIR PRESSURE

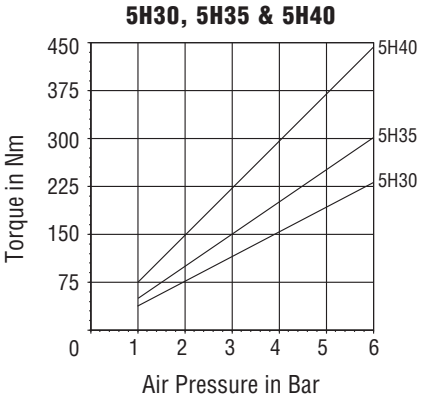

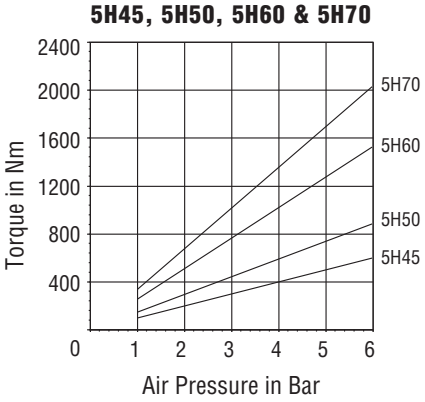

Torque (In. Lbs.) = Nm x 8.849
PSI = Bar ÷ .0689

METRIC 5H SERIES, FLANGE MOUNT CLUTCH - APPROXIMATE DIMENSIONS (MILLIMETERS)

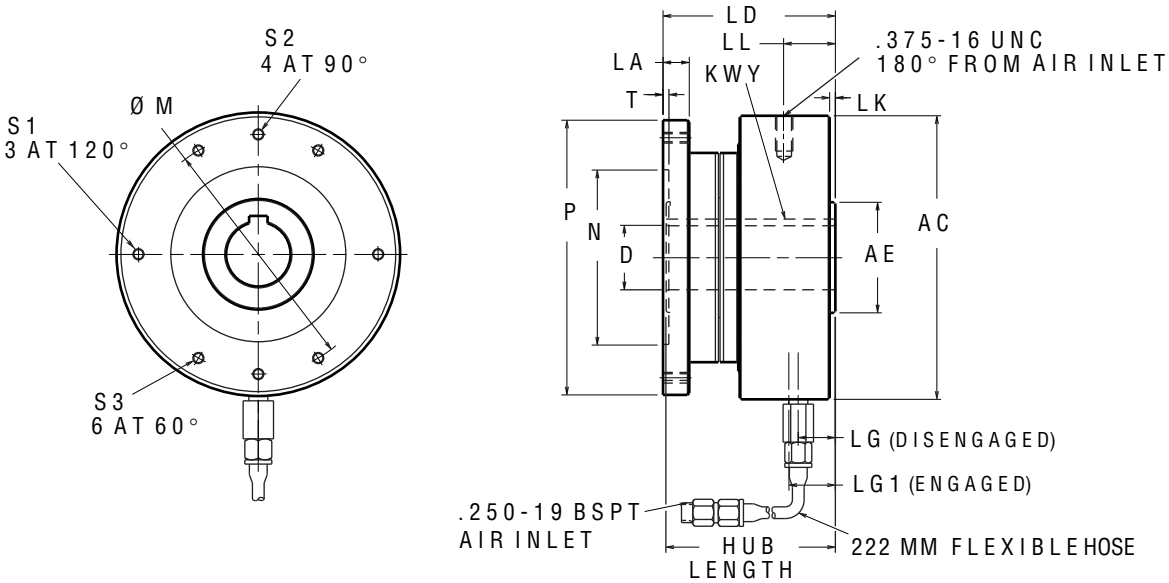

MODEL	PRODUCT NUMBER	AC	AE	D H7	LA	LD	LG	LG1	LK	LL	M	N H6	P h8	S1	S2	S3	T	HUB LENGTH	KWY WD x DP
5H30	906703	116	35	20	13	79	17	19	0	--	90	62	111	M6	M6	--	3,4	77	6 x 2,8
5H35	906802	129	45	25	14	83	18	20	1,5	--	110	75	124	M6	M6	--	2,8	81	8 x 3,3
5H40	906902	135	45	30	14	85	17	19	0,3	--	120	75	136	M6	M6	--	3,2	83	8 x 3,3
5H45	907002	154	60	35	14	94	20	22	3,0	--	130	95	149	--	M6	M6	3,2	92	10 x 3,3
5H50	907103	167	65	40	18	96	22	24	5,0	--	140	100	162	--	M8	M8	3,5	94	12 x 3,3
5H60	907202	192	75	45	18	108	26	28	6,0	--	170	115	194	--	M8	M8	4,4	106	14 x 3,8
5H70	907302	211	85	55	21	124	28	30	8,1	28	190	130	213	--	M10	M10	9,4	122	16 x 4,3

NOTE: Drawings are expressed in third angle projection.

METRIC 5HP SERIES, PILOT MOUNT TOOTH CLUTCHES

The Metric 5HP Series provides:

- Instantaneous Torque up to 3,705 Nm
- Maximum Operating Speed up to 3700 rpm
- **8 Standard Bore** sizes ranging from 20 to 75 millimeters
- **8 Minimum Bore** sizes ranging from 12,7 to 47,6 millimeters–you machine and assemble
- Positive engagement in random positions.

8 Models offer design flexibility:

- Sealed, radial ball bearings
- **Pilot Mount** design with tapped mounting holes
- Thru-shaft mounting design uses a full-length keyway
- Ability to mount a pulley, sprocket or gear on the clutch
- 222 millimeter hose included.

CAUTION!
Tooth clutches are normally engaged when stationary. They are not intended for use in most cyclic applications or high speed engagement. In certain circumstances, tooth clutches can be engaged at differential speeds. Please consult Nexen if you are considering an application involving engagement at differential speeds.

Torque (In. Lbs.) = Nm x 8.849
PSI = Bar ÷ .0689

METRIC 5HP SERIES, PILOT MOUNT TOOTH CLUTCHES—MULTIPOSITION

Standard Bore Clutch:

Model	Product Number	Speeds Up to RPM	Bore (mm)	Keyway WD x DP	# of Teeth	Shipping Wt. (kg)
5H30-P	909902	3700	20	6 x 2,8	91	3,2
5H35-P	910002	3200	25	8 x 3,3	106	4,5
5H40-P	910102	3000	30	8 x 3,3	122	5,6
5H45-P	910202	3000	35	10 x 3,3	137	7,1
5H50-P	910302	3000	40	12 x 3,3	152	8,8
5H60-P	910402	2400	45	14 x 3,8	183	13,5
5H70-P	910503	2000	55	16 x 4,3	214	21
5H80-P	911702	2000	75	20 x 4,9	244	32

Keys are customer furnished and must be full-length.

Minimum Bore Clutch:
Minimum bore clutches are supplied unassembled with machinable hubs.

Model	Product Number	Speeds Up to RPM	Bore (mm)	# of Teeth	Shipping Wt. (kg)
5H30-P	909903	3700	12,7	91	3,2
5H35-P	910003	3200	15,9	106	4,5
5H40-P	910103	3000	19,1	122	5,6
5H45-P	910203	3000	22,2	137	7,1
5H50-P	910303	3000	25,4	152	8,8
5H60-P	910403	2400	31,8	183	13,5
5H70-P	910504	2000	38,1	214	21
5H80-P	911703	2000	47,6	244	32

Keys are customer furnished and must be full-length.

TORQUE VS. AIR PRESSURE

5H30P, 5H35P & 5H40P

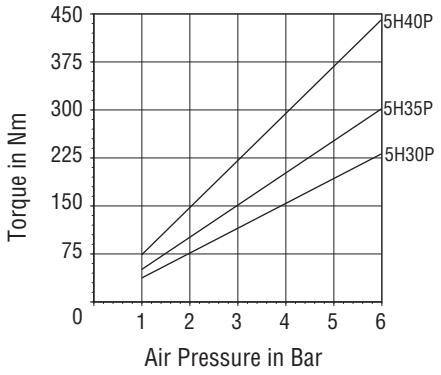

5H45P, 5H50P,5H60P & 5H70P

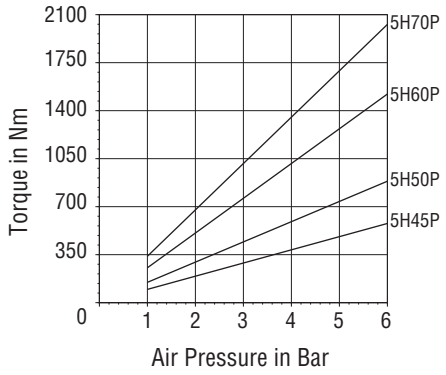

5H80P

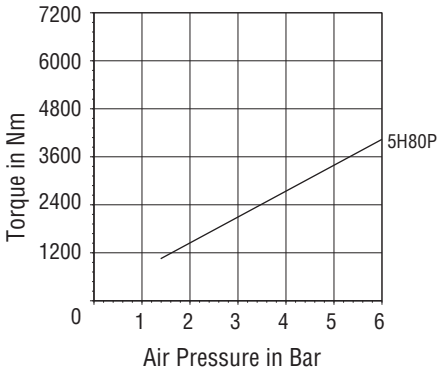

METRIC 5HP PILOT MOUNT CLUTCH - APPROXIMATE DIMENSIONS (MILLIMETERS)

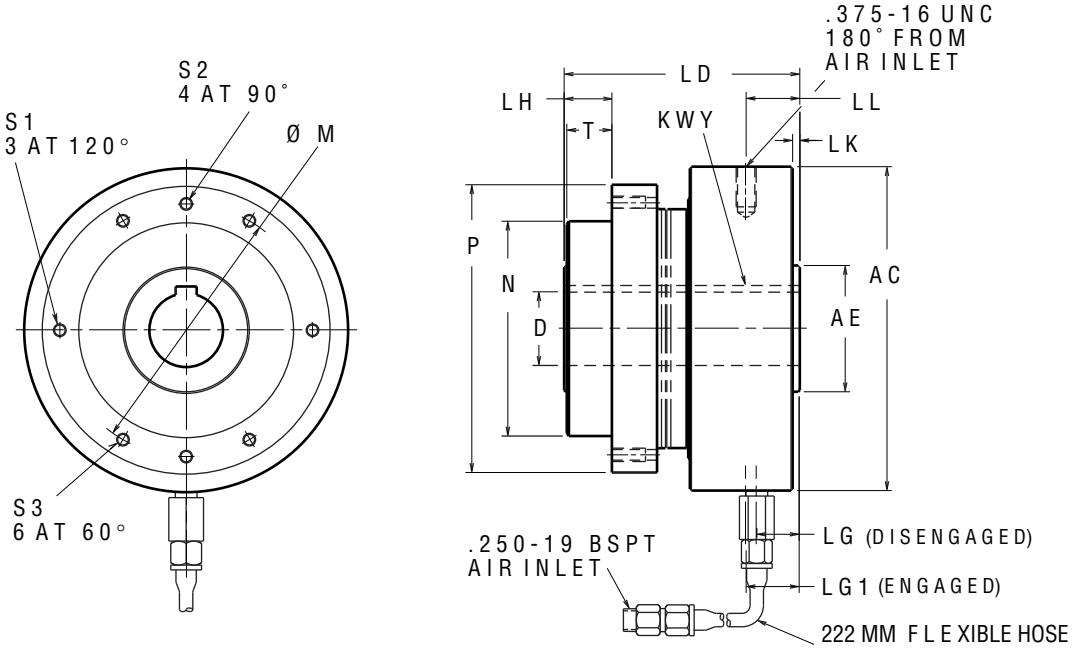

MODEL	PRODUCT NUMBER	AC	AE	D H7	LD	LG	LG1	LH	LK	LL	M	N h8	P	S1	S2	S3	T	KWY WD x DP
5H30-P	909902	116	35	20	93	18	20	18	1	--	88	73	98	M6	M6	--	17,5	6 x 2,8
5H35-P	910002	129	45	25	98	18	20	18	1	--	102	88	114	M6	M6	--	17,5	8 x 3,3
5H40-P	910102	135	45	30	101	18	20	19	1	--	108	88	124	M6	M6	--	17,5	8 x 3,3
5H45-P	910202	154	60	35	112	20	22	23	3	--	120	102	137	--	M6	M6	21,4	10 x 3,3
5H50-P	910302	167	65	40	113	21	23	22	4	--	135	112	152	--	M8	M8	19,8	12 x 3,3
5H60-P	910402	192	75	45	129	25	27	24	5	--	155	132	178	--	M8	M8	22,2	14 x 3,8
5H70-P	910503	211	85	55	151	25	27	40	5	30	180	145	210	--	M10	M10	30,2	16 x 4,3
5H80-P	911702	235	95	75	191	38	61	46	8	38	216	187	241	--	--	M12	47,6	20 x 4,9

NOTE: Drawings are expressed in third angle projection.

METRIC 5HP-E SERIES, ENCLOSED PILOT MOUNT TOOTH CLUTCHES

The Metric 5HP-E Series provides:

- Water protection per NEMA standard 1.26.5 (Water-proof machine)
- Instantaneous Torque up to 1,300 Nm
- Maximum Operating Speed up to 1650 rpm
- **6 Standard Bore** sizes ranging from 20 to 45 millimeters
- Positive engagement in random positions.

6 Models offer design flexibility:

- Sealed, radial ball bearings
- Pilot mount design with tapped mounting holes
- Thru-shaft mounting design uses a full-length keyway
- Ability to mount a pulley, sprocket or gear on the clutch
- 222 millimeter hose included.
- Nickel-plated exterior
- For additional corrosion protection, contact the factory

METRIC 5HP-E SERIES, ENCLOSED PILOT MOUNT TOOTH CLUTCHES—MULTIPOSITION

Standard Bore Units:

Model	Product Number	Speeds Up to RPM	Bore (mm)	Keyway WD x DP	# of Teeth	Shipping Wt. (kg)
5H30P-E	913005	1650	20	6 x 2,8	91	3,3
5H35P-E	913015	1350	25	8 x 3,3	106	4,6
5H40P-E	913025	1350	30	8 x 3,3	122	5,5
5H45P-E	913035	1200	35	10 x 3,3	137	7,4
5H50P-E	913045	1100	40	12 x 3,3	152	9
5H60P-E	913055	1000	45	14 x 3,8	183	13,5

Keys are customer furnished and must be full-length.

CAUTION!

Tooth clutches are normally engaged when stationary. They are not intended for use in most cyclic applications or high speed engagement. In certain circumstances, tooth clutches can be engaged at differential speeds. Please consult Nexen if you are considering an application involving engagement at differential speeds.

TORQUE VS. AIR PRESSURE

5H30PE, 5H35PE & 5H40PE

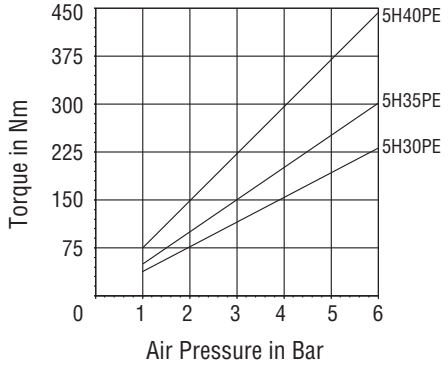

5H45PE, 5H50PE & 5H60PE

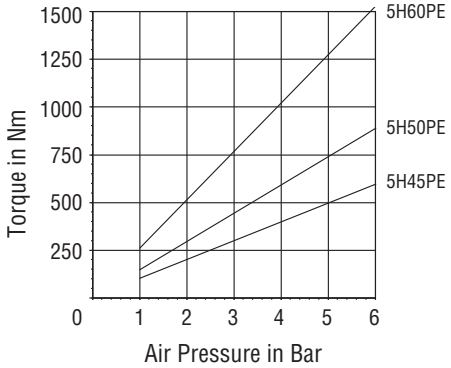

Torque (In. Lbs.) = Nm x 8.849
PSI = Bar ÷ .0689

METRIC 5HP-E ENCLOSED PILOT MOUNT CLUTCH - APPROXIMATE DIMENSIONS (MILLIMETERS)

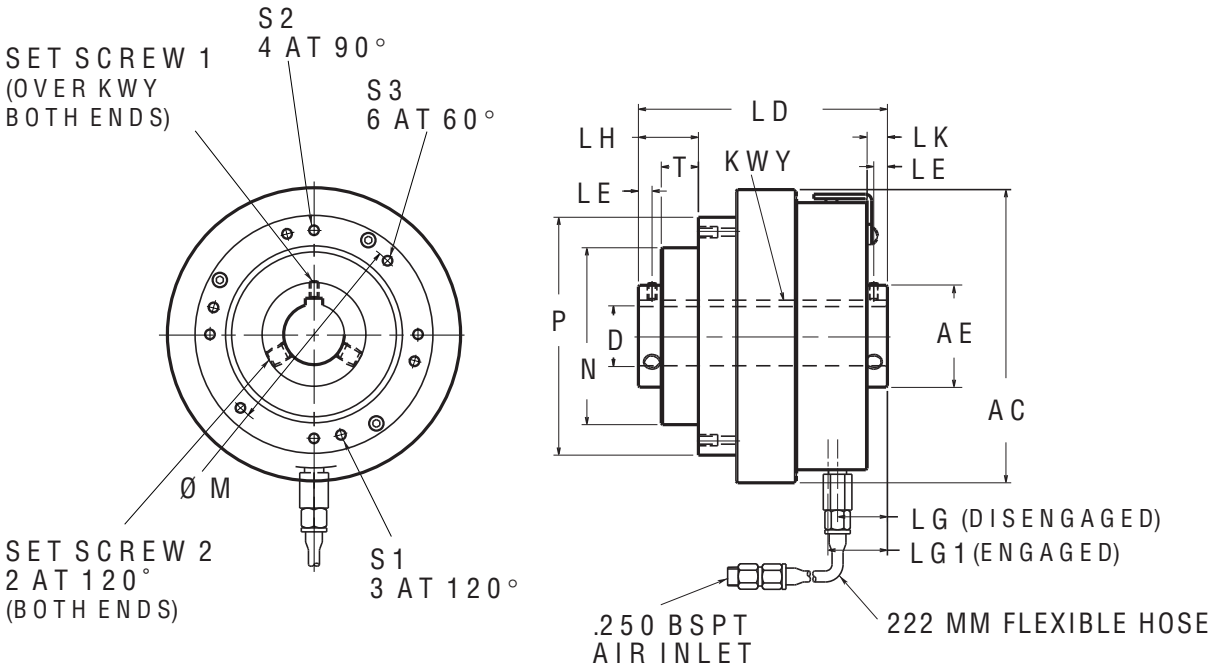

MODEL	PRODUCT NUMBER	AC	AE	D H7	LD	LE	LG	LG1	LH	LK	M	N h8	P	S1	S2	S3	T	SET SCREW 1	SET SCREW 2	KWY WD x DP
5H30P-E	913005	128	34	20	123	6	27	29	26	10	88	72	105	M6	M6	--	17,5	M5	M6	6 x 2,8
5H35P-E	913015	156	44	25	129	6	27	29	29	10	102	88	114	M6	M6	--	17,5	M5	M6	8 x 3,3
5H40P-E	913025	156	44	30	126	7	28	30	29	11	108	88	124	M6	M6	--	17,5	M5	M6	8 x 3,3
5H45P-E	913035	169	59	35	144	8	29	31	35	12	120	102	137	--	M6	M6	21,4	M5	M10	10 x 3,3
5H50P-E	913045	195	64	40	152	8	31	34	32	13	135	112	155	--	M8	M8	19,8	M6	M10	12 x 3,3
5H60P-E	913055	214	73	45	163	9	37	39	37	17	155	132	178	--	M8	M8	22,2	M6	M12	14 x 3,8

NOTE: Drawings are expressed in third angle projection.

METRIC 5HP-SP SERIES, PILOT MOUNT TOOTH CLUTCHES

The Metric 5HP-SP Series provides:

- Instantaneous Torque up to 3,705 Nm
- Maximum Operating Speed up to 3700 rpm
- **8 Standard Bore** sizes ranging from 20 to 75 millimeters
- **8 Minimum Bore** sizes ranging from 12,7 to 47,6 millimeters–you machine and assemble
- Positive engagement for accurate positions and perfect registration
- Accurate timing between two shafts

8 Models offer design flexibility:

- Sealed, radial ball bearings
- **Pilot Mount** design with tapped mounting holes
- Thru-shaft mounting design uses a full-length keyway
- Ability to mount a pulley, sprocket or gear on the clutch
- 222 millimeter hose included.

CAUTION!

Tooth clutches are normally engaged when stationary. They are not intended for use in most cyclic applications or high speed engagement. In certain circumstances, tooth clutches can be engaged at differential speeds. Please consult Nexen if you are considering an application involving engagement at differential speeds.

NOTE: Proper Single Position Tooth Clutch engagement depends upon 1) the allowable engagement speed with specific inertia loads and air pressure, and 2) the acceptable speed and air pressure which allow the clutch to engage in one position.

Torque (In. Lbs.) = Nm x 8.849
PSI = Bar ÷ .0689

METRIC 5HP-SP SERIES, PILOT MOUNT TOOTH CLUTCHES - SINGLE POSITION

Standard Bore Clutch:

Model	Product Number	Speeds Up to RPM	Bore (mm)	KEYWAY WD x DP	# of Teeth	Shipping Wt. (kg)
5H30P-SP	912102	3700	20	6 x 2,8	91	3,2
5H35P-SP	912202	3200	25	8 x 3,3	106	4,5
5H40P-SP	912302	3000	30	8 x 3,3	122	5,6
5H45P-SP	912402	3000	35	10 x 3,3	137	7,1
5H50P-SP	912502	3000	40	12 x 3,3	152	9
5H60P-SP	912703	2400	45	14 x 3,8	183	13,5
5H70P-SP	912802	2000	55	16 x 4,3	214	21
5H80P-SP	912902	2000	75	20 x 4,9	244	32

Keys are customer furnished and must be full-length.

Minimum Bore Clutch:

Minimum bore clutches are supplied unassembled with machinable hubs.

Model	Product Number	Speeds Up to RPM	Bore (mm)	# of Teeth	Shipping Wt. (kg)
5H30P-SP	912103	3700	12,7	91	3,2
5H35P-SP	912203	3200	15,9	106	4,5
5H40P-SP	912303	3000	19,1	122	5,6
5H45P-SP	912403	3000	22,2	137	7,1
5H50P-SP	912503	3000	25,4	152	9
5H60P-SP	912704	2400	31,8	183	13,5
5H70P-SP	912803	2000	38,1	214	21
5H80P-SP	912903	2000	47,6	244	32

Keys are customer furnished and must be full-length.

MIN. STATIC AIR PRESSURE FOR ENGAGEMENT VS. RPM

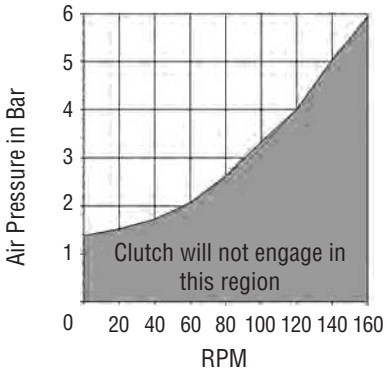

TORQUE VS. AIR PRESSURE

5H30PSP, 5H35PSP & 5H40PSP

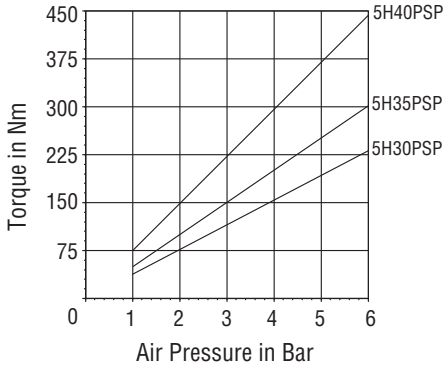

TORQUE VS. AIR PRESSURE

5H45PSP, 5H50PSP, 5H60PSP & 5H70PSP

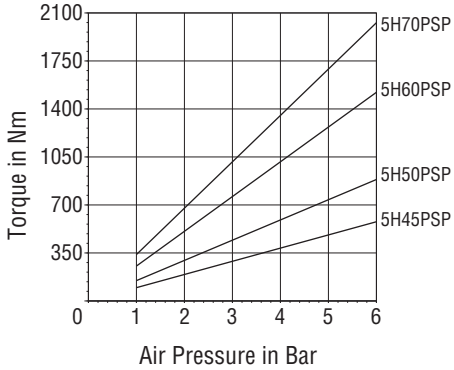

5H80PSP

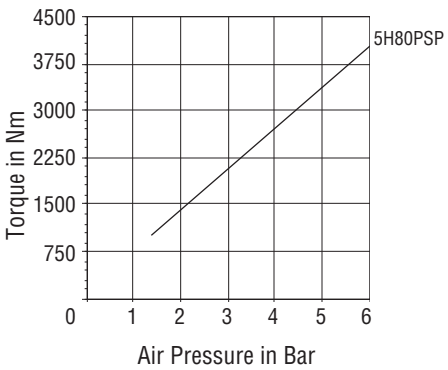

METRIC 5HP-SP PILOT MOUNT CLUTCH - APPROXIMATE DIMENSIONS (MILLIMETERS)

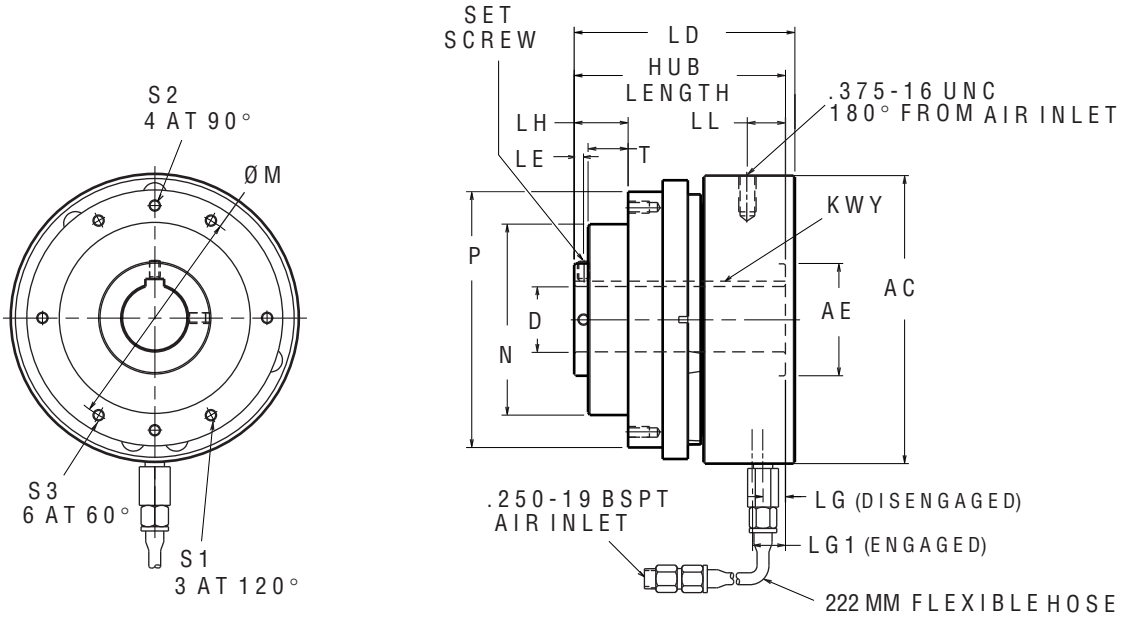

MODEL	PRODUCT NUMBER	AC	AE	D H7	LD	LE	LG	LG1	LH	LL	M	N h8	P	S1	S2	S3	T	HUB LENGTH	KWY WD x DP
5H30P-SP	912102	116	35	20	102	5	14	20	23	--	88	72	98	M6	M6	--	17,5	99	6 x 2,8
5H35P-SP	912202	129	45	25	107	5	14	20	25	--	102	88	114	M6	M6	--	17,5	105	8 x 3,3
5H40P-SP	912302	135	45	30	110	5	14	20	25	--	108	88	124	M6	M6	--	17,5	107	8 x 3,3
5H45P-SP	912402	154	60	35	118	5	17	22	29	--	120	102	137	--	M6	M6	21,4	118	10 x 3,3
5H50P-SP	912502	167	65	40	121	6	17	22	29	--	135	112	152	--	M8	M8	19,8	121	12 x 3,3
5H60P-SP	912703	192	75	45	136	7,5	21	27	32	--	155	132	178	--	M8	M8	22,2	137	14 x 3,8
5H70P-SP	912802	211	85	55	149	10	22	28	36	30	180	145	210	--	--	M10	25,4	151	16 x 4,3
5H80P-SP	912902	235	95	75	219	16	55	61	73	55	216	187	241	--	--	M12	47,6	219	20 x 4,9

MODEL	SET SCREW
5H30P-SP	M6, 2 @ 90°
5H35P-SP	M6, 2 @ 90°
5H40P-SP	M6, 2 @ 90°
5H45P-SP	M6, 2 @ 90°
5H50P-SP	M8, 2 @ 90°
5H60P-SP	M10, 2 @ 90°
5H70P-2P	M12, 2 @ 90°
5H80P-SP	M20, 3 @ 120°

NOTE: Drawings are expressed in third angle projection.

METRIC 5HP-SP-E SERIES, ENCLOSED PILOT MOUNT TOOTH CLUTCHES

The Metric 5HP-SP-E Series provides:

- Water protection per NEMA standard 1.26.5 (Water-proof machine)
- Instantaneous Torque up to 1,300 Nm
- Maximum Operating Speed up to 1650 rpm
- **6 Standard Bore** sizes ranging from 20 to 45 millimeters
- Positive engagement for accurate position and registration
- Accurate timing between two shafts.

6 Models offer design flexibility:

- Sealed, radial ball bearings
- Pilot mount design with tapped mounting holes
- Thru-shaft mounting design uses a full-length keyway
- Ability to mount a pulley, sprocket or gear on the clutch
- 222 millimeter hose included.
- Nickel-plated exterior
- For additional corrosion protection, contact the factory

METRIC 5HP-SP-E SERIES, ENCLOSED PILOT MOUNT TOOTH CLUTCHES—SINGLE POSITION

Standard Bore Units:

Model	Product Number	Speeds Up to RPM	Bore (mm)	KEYWAY WD x DP	# of Teeth	Shipping Wt. (kg)
5H30P-SP-E	913004	1650	20	6 x 2,8	91	3,3
5H35P-SP-E	913014	1350	25	8 x 3,3	106	4,7
5H40P-SP-E	913024	1350	30	8 x 3,3	122	5,4
5H45P-SP-E	913034	1200	35	10 x 3,3	137	7,4
5H50P-SP-E	913044	1100	40	12 x 3,3	152	9
5H60P-SP-E	913054	1000	45	14 x 3,8	183	13,5

Keys are customer furnished and must be full-length.

CAUTION!

Tooth clutches are normally engaged when stationary. They are not intended for use in most cyclic applications or high speed engagement. In certain circumstances, tooth clutches can be engaged at differential speeds. Please consult Nexen if you are considering an application involving engagement at differential speeds.

TORQUE VS. AIR PRESSURE

5H30PSPE, 5H35PSPE & 5H40PSPE

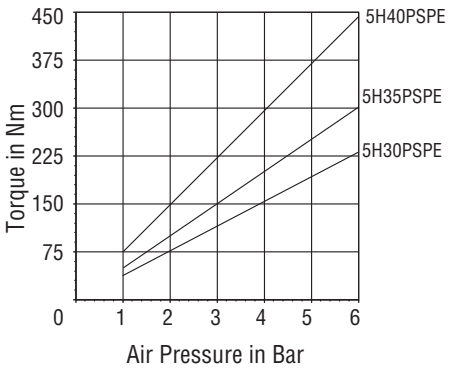

5H45PSPE, 5H50PSPE & 5H60PSPE

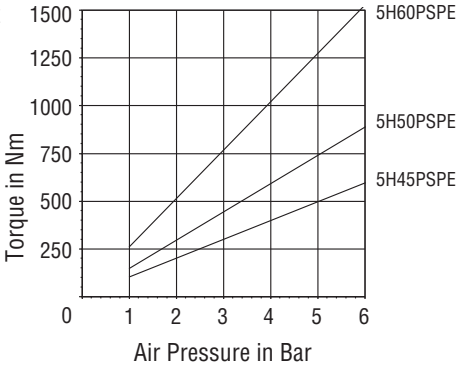

Torque (In. Lbs.) = Nm x 8.849
PSI = Bar ÷ .0689

MIN. STATIC AIR PRESSURE FOR ENGAGEMENT VS. RPM

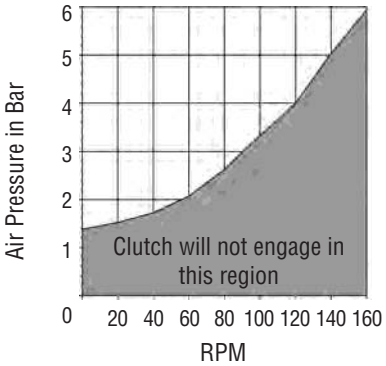

NOTE: Proper Single Position Tooth Clutch engagement depends upon 1) The allowable engagement speed with specific inertia loads and air pressure, and 2) The acceptable speed and air pressure which allow the clutch to engage in one position.

METRIC 5HPSP-E ENCLOSED PILOT MOUNT CLUTCH - APPROXIMATE DIMENSIONS (MILLIMETERS)

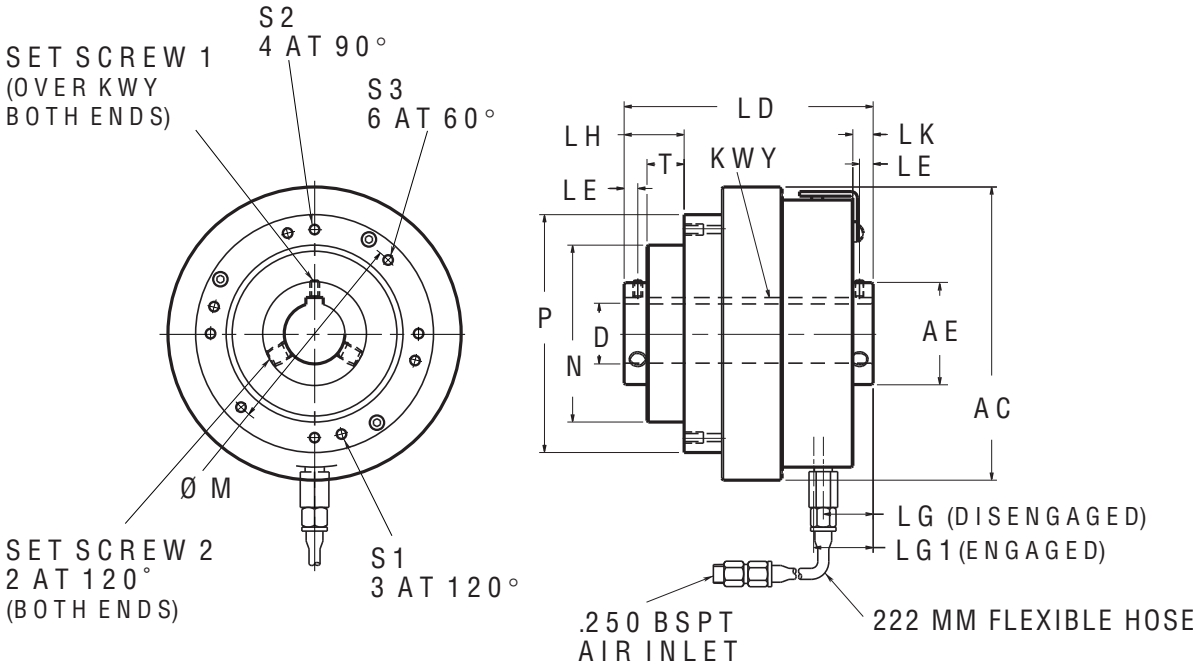

MODEL	PRODUCT NUMBER	AC	AE	D H7	LD	LE	LG	LG1	LH	LK	M	N h8	P	S1	S2	S3	T	SET SCREW 1	SET SCREW 2	KWY WD x DP
5H30P-SP-E	913004	128	34	20	123	6	27	32	26	10	88	72	105	M6	M6	--	17,5	M5	M6	6 x 2,8
5H35P-SP-E	913014	156	44	25	129	6	27	32	29	10	102	88	114	M6	M6	--	17,5	M5	M6	8 x 3,3
5H40P-SP-E	913024	156	44	30	126	7	28	34	29	11	108	88	124	M6	M6	--	17,5	M5	M6	8 x 3,3
5H45P-SP-E	913034	169	59	35	144	8	29	34	35	12	120	102	137	--	M6	M6	21,4	M5	M10	10 x 3,3
5H50P-SP-E	913044	195	64	40	152	8	31	38	32	13	135	112	155	--	M8	M8	19,8	M6	M10	12 x 3,3
5H60P-SP-E	913054	214	73	45	163	9	37	43	37	17	155	132	178	--	M8	M8	22,2	M6	M12	14 x 3,8

NOTE: Drawings are expressed in third angle projection.

In accordance with Nexen's established policy of constant product improvement, the specifications contained in this document are subject to change without notice. Technical data listed in this document are based on the latest information available at the time of printing and are also subject to change without notice. For current information, please consult:
www.nexengroup.com

OVERLOAD PROTECTION DEVICES

This Section Contains: . . . . .Page

TORQUE LIMITERS

Features, Benefits, Functions 110
Air Pressure Control System 111
SmartValve Controller 111
TL-A Torque Limiters, Set Screw Mt. .112-113
TL-A-E Torque Limiters, Enclosed, Set Screw Mount 114-115
TL-AC Torque Limiters, Set Collar Mt . . .116-117
Torque Limiter Flexible Couplings . . .118-119

METRIC TORQUE LIMITERS

TL-A & TL-AE Set Screw Mounts 120-121

OVERLOAD PROTECTION SYSTEM

OPS Chassis & Enclosed Versions . . .122-123

MECHANICAL TORQUE LIMITER

Models 109
Ordering Information 124

Nexen Mechanical Torque Limiter Family

Single Position Re-engagement:
Standard Version

After the overload has been removed, the coupling will re-engage precisely 360° from the original disengaged position.

Overload signal with a mechanical switch or a proximity sensor.

Suitable for use in machine tools, packing machines and automation systems and other applications requiring precise timing.

Multi-Position Re-engagement:

Coupling re-engages at multiple set angular intervals.

Immediate availability of the machine as soon as the overload has been removed.

Overload signal with a mechanical switch or a proximity sensor.

Standard engagement every 60º.

Engagement after 30, 45, 90 and 120º optional.

Full Disengagement:

Permanent separation of drive and driven face in the event of a torque overload.

Overload signal with a mechanical switch or a proximity sensor.

No residual friction.

Coupling can be re-engaged manually (Engagement every 60º with other engagement options available including single position.)

For use in high dynamic applications.

Dimensions:

Go to the Nexen web site (nexengroup.com)

Select "Find Products" -- "Product Search by Category" -- "Mechanical Torque Limiters"

Ordering Information: See Page 124

TORQUE LIMITERS

Nexen's line of **Torque Limiters** is designed to protect your equipment by immediately disengaging the drive shaft when excessive torque occurs:

- Single position, ball detent design assures re-engagement of the drive from a complete stop in the same position every time, providing exact timing of both components

Nexen's **Air Pressure Circuits** complete the package for total overall protection:

- **Single Air Pressure** circuit allows for remote adjustment of the torque setting
- **Dual Air Pressure** circuit permits remote adjustment of torque while allowing a higher pressure for startup (high inertia loads) and a lower pressure for running torque requirements

When used with Torque Limiters, Nexen **Single or Double Flexible Couplings** allow:

- High shaft misalignment
- Zero backlash
- Excellent torsional stiffness

How a Torque Limiter System Works:

1. Install Torque Limiter, Limit Switch and the Air Pressure Control System;
2. Set the air pressure for the desired overload torque;
3. If an overload occurs, the Torque Limiter interface separates, moving the cylinder to the disengaged position;
4. The Limit Switch detects the cylinder movement and interrupts electrical power. Interruption of electrical power de-energizes the 3-way N.C. solenoid valve, which exhausts air pressure from the Torque Limiter, causing it to disengage.
5. When the machinery comes to a **complete stop**, re-engage the Torque Limiter by jogging the drive, thus allowing machine operation to continue.

The following pages detail your Torque Limiter System options. You'll find information on Air Pressure Control Systems, Torque Limiter designs and Flexible Couplings. Once you have determined your total system requirements, order each item separately.

Air Pressure Control Systems:

Choose from 2 Air Pressure Control Systems–Single or Dual:

The **Single Air Pressure System** provides basic protection:

- A constant bleed type Air Regulator is set to an air pressure that will allow the machine to operate, but low enough for Torque Limiter disengagement in the event of machine overload
- The Air Regulator also provides a constant bleed to eliminate back pressure in the air line while precisely maintaining pressure within .05 psi.
- Torque setting can be changed while the machine is running via the Air Regulator.

The **Dual Air Pressure System** provides ultimate protection, allowing higher startup pressure (high inertia load) and lower pressure for running with overload protection:

- Regulator #1 is set to an air pressure high enough to allow machine startup
- After a pre-set period of time, the Time Delay Control de-energizes the 3-way inline mount solenoid valve, allowing only the lower running air pressure to operate the Torque Limiter
- Regulator #2 is set to an air pressure that will allow the machine to operate, but low enough for Torque Limiter disengagement in the event of a machine overload
- Regulator #2 also provides a constant bleed to eliminate back pressure in the air line during overload

SmartValve Controller

The **Nexen SmartValve Controller** is a microprocessor based pressure controller that is ideally suited for use with Nexen torque limiters, brakes and clutches. The SmartValve replaces much of the valves, regulators, air lines and plumbing needed to provide multiple pressures to Nexen's pneumatic products.

- The SmartValve accepts pressure set points in two ways: analog and digital.
  A 0-10 analog signal caused the SmartValve to output a proportional 0-80 psig.
- Four digital inputs allow the SmartValve to output 16 different pressures that correspond to one of the standard or custom pressure tables stored onboard.
- Another input is used to sense a switch closure that signals the SmartValve to exhaust the air pressure, such as in the case of a torque limiter overload.
- A solid state relay output provides alarm indication during overload situations.

Air Pressure Control Systems

Control Systems Style	Product Number
Dual System Consists of:	801579 (1) Air Regulator Air Gauge - Constant Bleed Type, 0-100 PSI, 125 NPT (2) Quick Exhaust Valve (2) Tee Fittings, 125 NPTF (1) Air Filter, regular duty, 250 NPT (1) Air Regulator/Gauge, 0-125 PSI, 250 NPT (2) 3-Way Inline Mount Solenoid Valve, N.C. (1) Adjustable Time Delay Control
Single System Consists of:	801578 (1) Air Regulator Air Gauge - Constant Bleed Type, 0-100 PSI, 125 NPT (1) 3-Way Inline Mount Solenoid Valve N.C. (1) Quick Exhaust Valve (1) Tee Fitting, 125 NPTF

Recommended Air Line Connections

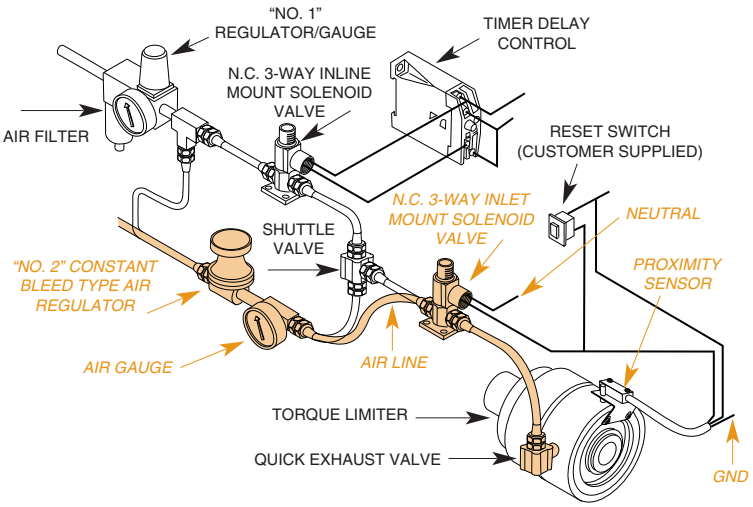

NOTE:
Areas colored tan, and italicized tan type and arrows indicate "single air pressure system" installation only. "Dual air pressure system" requires all components.

SmartValve Controller

Control Systems Style	Product Number
SmartValve Controller	964508
115/230 VAC Power Supply	964509

Specifications:

DC Power, 24 VDC @ 500mA
(Optional 24VDC CE, UL, CSA approved 115/230 VAC power supply available)
Input Pressure Range, 85–150 PSIG (6–10 bar)
Output Pressure Range, 0–80 PSIG (0–5.5 bar)
Accuracy, ± .25% full scale @ 77°F (25°C)
Cable, 6.5ft. (2m) cable included

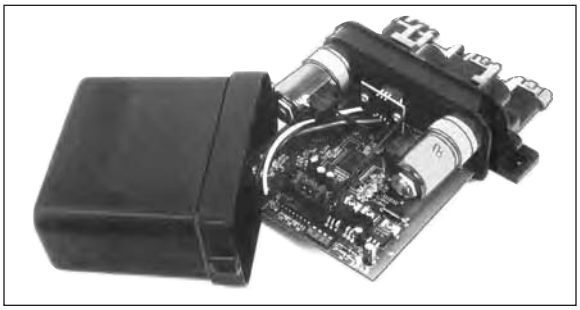

Approximate Dimensions

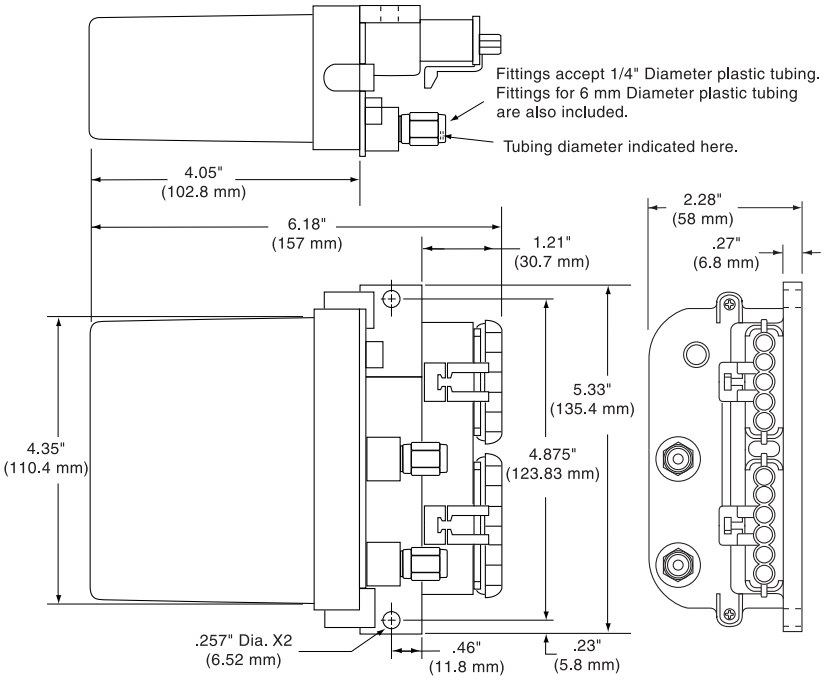

Circuit Diagram

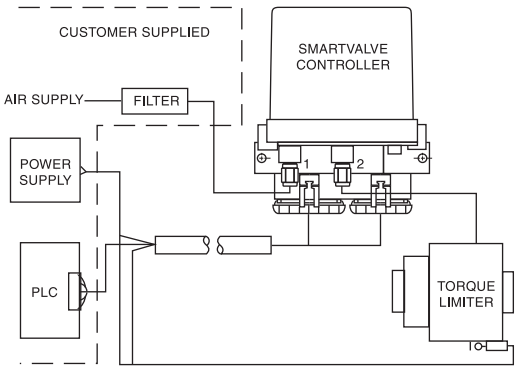

TL-A SERIES TORQUE LIMITERS, SET SCREW MOUNTED

TL-A Series Set Screw Mounted, Open Design Torque Limiters provide:

- **16 Models** to choose from
- Torque up to 27,700 In. Lbs. @ 80 psi
- Operating Speed up to 2000 rpm
- Bore Sizes ranging from 0.625 to 2.938 inches
- Remote torque adjustment with Nexen's **Single** and **Double Air Pressure Circuits**
- Many Models available in either high torque or low torque versions
- Limit Switch Assembly with 3 ft. cord and hardware included on all models

TL-A Series Torque Limiters - Set Screw Mount

Model	Product Number	Speeds Up to RPM	Torque Up to (In. Lbs.)	Bore (In)	Key Size (WD X DP)	Shipping Wt. (Lbs)
TL10-A	801802	2000	185	0.625	0.188 sq	5
TL15-A	801812	2000	365	0.625	0.188 sq	5
TL20-A	801502	1800	860	0.875	0.188 sq	16
TL20-A/2	801506	1800	400	0.875	0.188 sq	16
TL30-A	801512	1650	2150	1.125	0.250 sq	19
TL30-A/2	801516	1650	800	1.125	0.250 sq	19
TL40-A	801522	1350	4190	1.625	0.375 sq	29
TL40-A/2	801526	1350	1500	1.625	0.375 sq	29
TL50-A	801532	1200	6230	1.750	0.375 sq	38
TL50-A/2	801536	1200	2200	1.750	0.375 sq	38
TL60-A	801542	1050	10820	1.938	0.500 sq	52
TL60-A/2	801546	1050	3800	1.938	0.500 sq	52
TL70-A	801552	950	15000	2.188	0.500 sq	45
TL70-A/2	801556	950	6700	2.188	0.500 sq	45
TL80-A	801562	850	27700	2.938	0.750 x 0.500	70
TL80-A/2	801566	850	12000	2.938	0.750 x 0.500	70

Minimum Shaft insertion halfway through Hub. Keys are customer furnished.

Operating Speed: Disengaging speeds are limited to the maximum allowable feet per minute rating of the rotary seal between the drive flange and drive ring. Torque Limiters are engaged when stationary.

NOTE: For higher speeds-consult Nexen.

Attachment Options

Flexible Coupling Assemblies

Flexible Coupling Assemblies are required for in-line coupling applications, and are available in single or double flex designs to provide **high misalignment capabilities with high torque**. Turn to pages 118 and 119 for Flexible Coupling details.

Pulleys, Sprockets, Gears

These can be attached to the clutch for offset shaft applications. Tapped holes are provided for ease of mounting. Nexen does not furnish these items. For minimum sprocket requirements, see page 369.

TL-A SERIES TORQUE LIMITERS - SET SCREW MOUNTED - APPROXIMATE DIMENSIONS (INCHES)

TL10-A & TL15-A

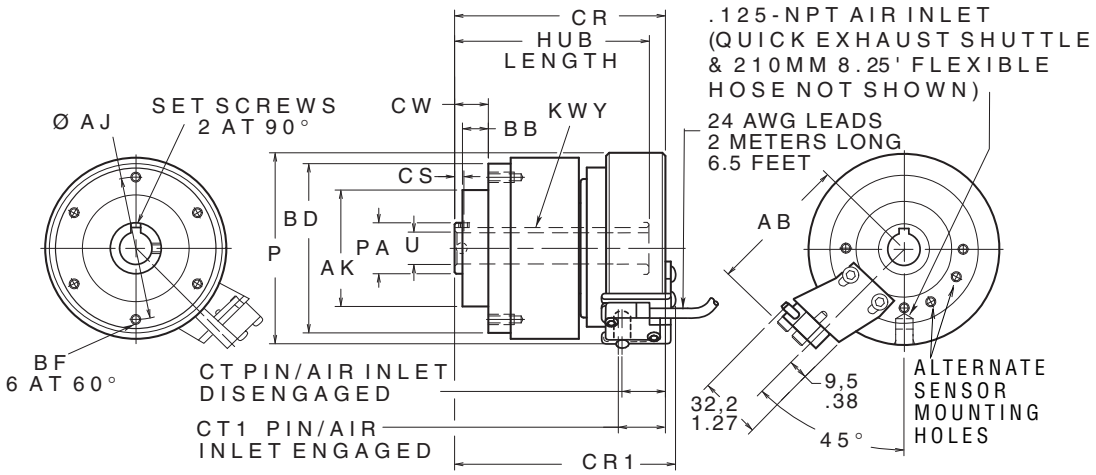

MODEL	PRODUCT NUMBER	AB	AJ	AK ±.001	BB	BD	BF	CR	CR1	CS	CT	CT1	CW	KL	KEYWAY WD	KEYWAY DP	P	PA	U +.001 -.000	HUB LENGTH	SET SCREW
TL10-A	801802	2.81	2.750	2.249	0.50	3.27	.190-24	4.22	4.41	0.18	0.87	0.94	0.65	3.13	0.188	0.094	3.69	0.98	0.625	3.91	.190-24
TL15-A	801812	2.81	2.750	2.249	0.50	3.27	.190-24	4.22	4.41	0.18	0.87	0.94	0.65	3.13	0.188	0.094	3.69	0.98	0.625	3.91	.190-24

TL-A SERIES TORQUE LIMITERS - SET SCREW MOUNTED - APPROXIMATE DIMENSIONS

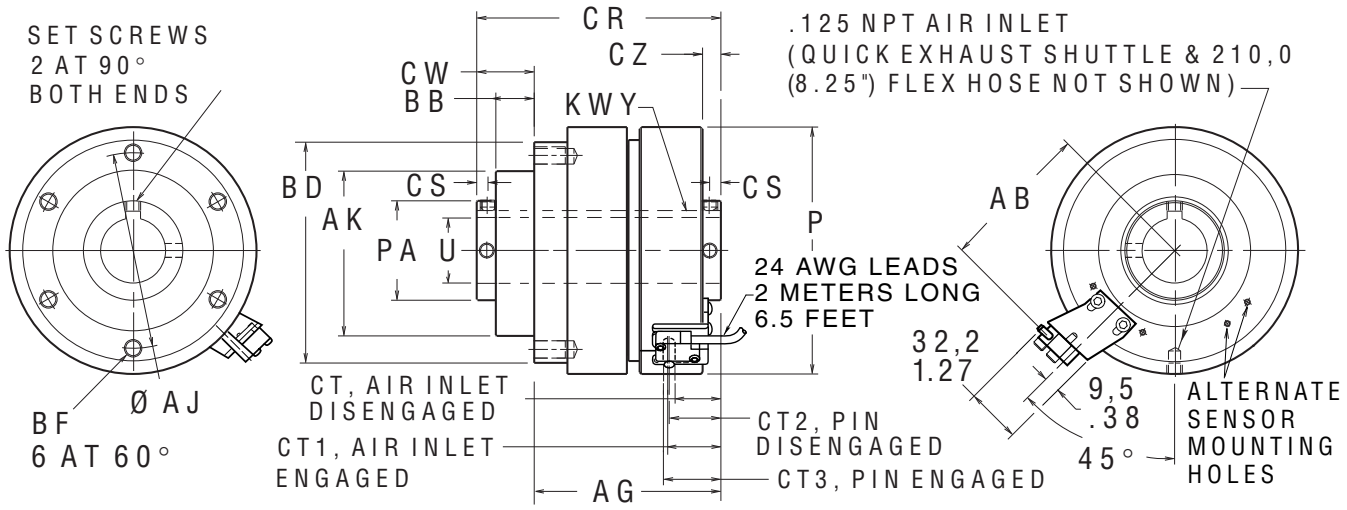

MODEL	PRODUCT NUMBER	AB	AG	AJ	AK ±.001	BB	BD	BF	CP	CR	CS	CT	CT1	CT2	CT3	CW	CZ	KEYWAY WD	KEYWAY DP	P
TL20-A	801502	3.22	4.24	3.562	2.874	0.69	4.12	.312-18	–	5.28	0.25	1.09	1.37	1.22	1.36	1.04	0.41	0.188	0.094	4.56
TL20-A/2	801506	3.22	4.24	3.562	2.874	0.69	4.12	.312-18	–	5.28	0.25	1.09	1.31	1.22	1.44	1.04	0.41	0.188	0.094	4.56
TL30-A	801512	3.53	4.21	4.062	3.499	0.74	4.50	.312-18	–	5.36	0.28	1.12	1.34	1.26	1.48	1.15	0.45	0.250	0.120	5.09
TL30-A/2	801516	3.53	4.21	4.062	3.499	0.74	4.50	.312-18	–	5.36	0.28	1.12	1.34	1.26	1.48	1.15	0.45	0.250	0.120	5.09
TL40-A	801522	3.98	4.66	4.750	4.124	0.96	5.40	.375-16	–	6.09	0.31	1.11	1.33	1.33	1.55	1.43	0.51	0.375	0.113	6.06
TL40-A/2	801526	3.98	4.66	4.750	4.124	0.96	5.40	.375-16	–	6.09	0.31	1.11	1.33	1.33	1.55	1.43	0.51	0.375	0.113	6.06
TL50-A	801532	4.28	5.15	5.375	4.499	0.82	6.12	.500-13	–	6.44	0.31	1.16	1.38	1.38	1.60	1.29	0.57	0.375	0.176	6.56
TL50-A/2	801536	4.28	5.15	5.375	4.499	0.82	6.12	.500-13	–	6.44	0.31	1.16	1.38	1.38	1.60	1.29	0.57	0.375	0.176	6.56
TL60-A	801542	4.78	5.47	6.125	5.249	0.88	6.87	.500-13	–	6.91	0.38	1.37	1.59	1.54	1.76	1.44	0.58	0.500	0.227	7.56
TL60-A/2	801546	4.78	5.47	6.125	5.249	0.88	6.87	.500-13	–	6.91	0.38	1.37	1.59	1.54	1.76	1.44	0.58	0.500	0.227	7.56
TL70-A	801552	5.03	6.39	7.000	5.749	0.88	7.90	.625-11	1.69	7.75	0.38	1.52	1.74	1.68	1.90	1.36	0.62	0.50	0.250	8.31
TL70-A/2	801556	5.03	6.39	7.000	5.749	0.88	7.90	.625-11	1.69	7.75	0.38	1.52	1.74	1.68	1.90	1.36	0.62	0.50	0.250	8.31
TL80-A	801562	6.02	7.16	8.500	7.374	1.88	9.50	.625-11	2.76	9.42	0.38	2.75	2.97	2.75	2.97	2.26	0.59	0.75	0.250	9.25
TL80-A/2	801566	6.02	7.16	8.500	7.374	1.88	9.50	.625-11	2.76	9.42	0.38	2.75	2.97	2.75	2.97	2.26	0.59	0.75	0.250	9.25

MODEL	PRODUCT NUMBER	PA	U +.001 -.000	SET SCREW
TL20-A	801502	1.38	0.875	.250-20
TL20-A/2	801506	1.38	0.875	.250-20
TL30-A	801512	1.75	1.125	.312-18
TL30-A/2	801516	1.75	1.125	.312-18
TL40-A	801522	2.36	1.625	.375-16
TL40-A/2	801526	2.36	1.625	.375-16
TL50-A	801532	2.56	1.750	.375-16
TL50-A/2	801536	2.56	1.750	.375-16
TL60-A	801542	2.95	1.938	.500-13
TL60-A/2	801546	2.95	1.938	.500-13
TL70-A	801552	3.35	2.188	.500-13
TL70-A/2	801556	3.35	2.188	.500-13
TL80-A	801562	3.74	2.938	.500-13
TL80-A/2	801566	3.74	2.938	.500-13

Electro/Mechanical Limit Switch Option For Nexen Torque Limiters

Models TL20-50A, A/2. . . . . Product Number 801571
Models TL60-70A, A/2. . . . . Product Number 801572
Models TL80A, A/2 . . . . . Product Number 801573

Torque Vs. Air Pressure

See page 99.

TL-A-E SERIES TORQUE LIMITERS, SET SCREW MOUNT

TL-A-E Series Set Screw Mounted, Enclosed Torque Limiters provide:

- **10 Models** to choose from
- Torque up to 10,820 In. Lbs. @ 80 psi
- Operating Speed up to 1650 rpm
- Bore Sizes ranging from 0.875 to 1.938 inches
- Remote torque adjustment with Nexen's **Single** and **Double Air Pressure Circuits**
- Many Models available in either high torque or low torque versions
- Proximity Sensor with 3 ft. cord and hardware included on all models
- Water protection per NEMA Standard 1.26.55 (waterproof machines)
- Nickel-plated exterior
- For additional corrosion protection, contact the factory

TL-A-E Series Torque Limiters - Set Screw Mount

Model	Product Number	Meets USDA & NEMA Specs	Speeds Up to RPM	Torque Up to (In. Lbs.)	Bore (In)	Key Size (SQ)	Shipping Wt. (Lbs)
TL20A-E	802902	Yes	1650	860	0.875	0.188	7
TL20A/2-E	802906	Yes	1650	400	0.875	0.188	7
TL30A-E	802912	Yes	1350	2150	1.125	0.250	10
TL30A/2-E	802916	Yes	1350	800	1.125	0.250	10
TL40A-E	802922	Yes	1200	4190	1.500	0.375	16
TL40A/2-E	802926	Yes	1200	1500	1.500	0.375	16
TL50A-E	802932	Yes	1100	6230	1.750	0.375	20
TL50A/2-E	802936	Yes	1100	2200	1.750	0.375	20
TL60A-E	802942	Yes	1000	10820	1.938	0.500	30
TL60A/2-E	802946	Yes	1000	3800	1.938	0.500	30

Minimum Shaft insertion halfway through Hub. Keys are customer furnished.

Operating Speed: Disengaging speeds are limited to the maximum allowable feet per minute rating of the rotary seal between the drive flange and drive ring. Torque Limiters are engaged when stationary.

NOTE: For higher speeds-consult Nexen.

Model	Product Number	COUPLING ASSEMBLIES SINGLE FLEX Product Number	DOUBLE FLEX Product Number
TL20A-E	802902	909980	909981
TL20A/2-E	802906	909980	909981
TL30A-E	802912	910080	910081
TL30A/2-E	802916	910080	910081
TL40A-E	802922	910280	910281
TL40A/2-E	802926	910280	910281
TL50A-E	802932	910380	910381
TL50A/2-E	802936	910380	910381
TL60A-E	802942	910480	910481
TL60A/2-E	802946	910480	910481

Attachment Options

Flexible Coupling Assemblies

Flexible Coupling Assemblies are required for in-line coupling applications, and are available in single or double flex designs to provide **high misalignment capabilities with high torque**. Turn to pages 118 and 119 for Flexible Coupling details.
For quick selection of Flexible Couplings, refer to the chart above.

Pulleys, Sprockets, Gears

These can be attached to the clutch for offset shaft applications. Tapped holes are provided for ease of mounting. Nexen does not furnish these items. For minimum sprocket requirements, see page 369.

Torque Vs. Air Pressure

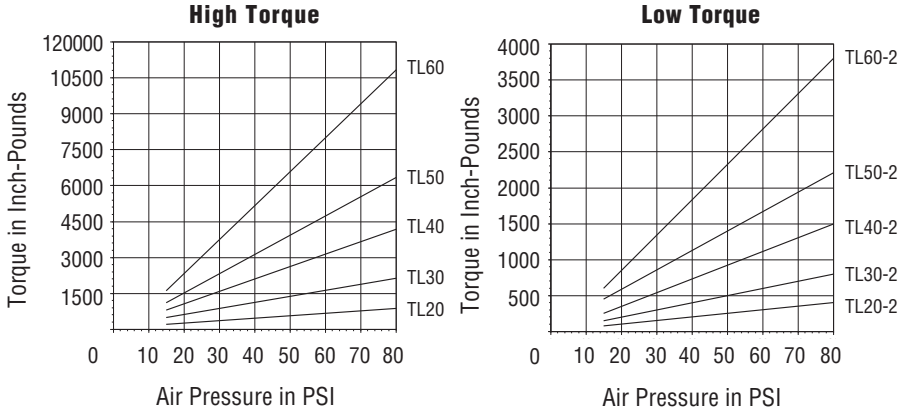

TL-A-E SERIES TORQUE LIMITERS - SET SCREW MOUNT - APPROXIMATE DIMENSIONS (INCHES)

TLA-E & TLA-E/2

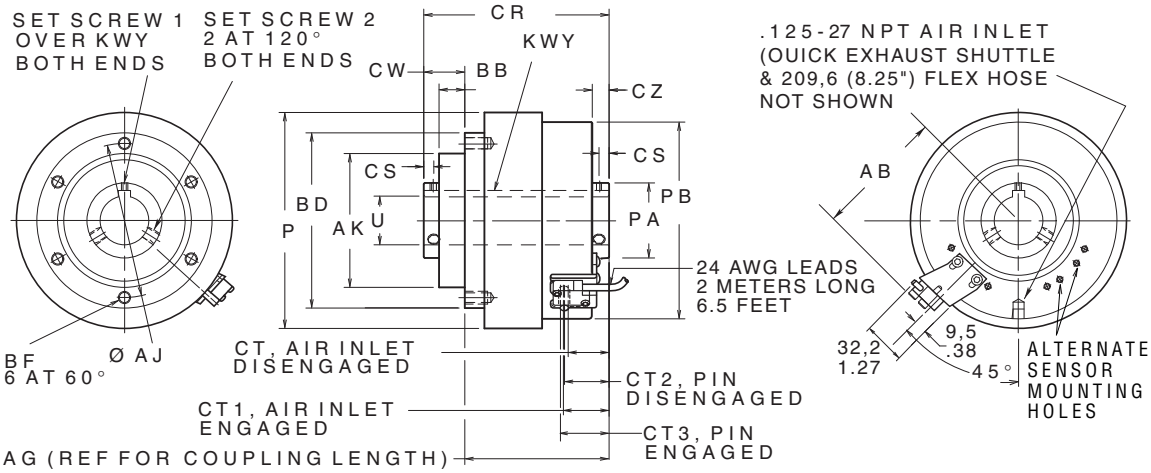

MODEL	PRODUCT NUMBER	AB	AG	AJ	AK +.000 -.001	BB	BD	BF	CR	CS	CT	CT1	CT2	CT3	CW	CZ	KEYWAY WD	KEYWAY DP
TL20A-E	802902	3.22	3.79	3.562	2.875	0.69	4.12	.312-18	4.83	0.23	1.03	1.17	1.17	1.31	1.04	0.36	0.188	0.094
TL20A/2-E	802906	3.22	3.79	3.562	2.875	0.69	4.12	.312-18	4.83	0.23	1.03	1.17	1.17	1.31	1.04	0.36	0.188	0.094
TL30A-E	802912	3.53	3.97	4.062	3.500	0.74	4.50	.312-18	5.10	0.25	1.06	1.23	1.20	1.37	1.13	0.38	0.250	0.125
TL30A/2-E	802916	3.53	3.97	4.062	3.500	0.74	4.50	.312-18	5.10	0.25	1.06	1.23	1.20	1.37	1.13	0.38	0.250	0.125
TL40A-E	802922	3.99	4.44	4.750	4.125	0.79	5.40	.375-16	5.71	0.31	1.19	1.38	1.33	1.52	1.26	0.52	0.375	0.188
TL40A/2-E	802926	3.99	4.44	4.750	4.125	0.79	5.40	.375-16	5.71	0.31	1.19	1.38	1.33	1.52	1.26	0.52	0.375	0.188
TL50A-E	802932	4.28	4.59	5.375	4.500	0.86	6.12	.500-13	5.97	0.31	1.22	1.37	1.32	1.47	1.38	0.51	0.375	0.188
TL50A/2-E	802936	4.28	4.59	5.375	4.500	0.86	6.12	.500-13	5.97	0.31	1.22	1.37	1.32	1.47	1.38	0.51	0.375	0.188
TL60A-E	802942	4.78	4.97	6.125	5.250	0.77	7.00	.500-13	6.40	0.37	1.46	1.65	1.62	1.81	1.43	0.66	0.500	0.250
TL60A/2-E	802946	4.78	4.97	6.125	5.250	0.77	7.00	.500-13	6.40	0.37	1.46	1.65	1.62	1.81	1.43	0.66	0.500	0.250

MODEL	PRODUCT NUMBER	P	PA	PB	U +.001 -.000	SET SCREW 1	SET SCREW 2
TL20A-E	802902	5.03	1.33	4.56	0.875	.190-24	.250-20
TL20A/2-E	802906	5.03	1.33	4.56	0.875	.190-24	.250-20
TL30A-E	802912	6.16	1.72	5.09	1.125	.190-24	.312-24
TL30A/2-E	802916	6.16	1.72	5.09	1.125	.190-24	.312-24
TL40A-E	802922	6.66	2.31	6.06	1.500	.190-24	.375-24
TL40A/2-E	802926	6.66	2.31	6.06	1.500	.190-24	.375-24
TL50A-E	802932	7.66	2.51	6.56	1.750	.250-20	.375-24
TL50A/2-E	802936	7.66	2.51	6.56	1.750	.250-20	.375-24
TL60A-E	802942	8.40	2.87	7.56	1.938	.250-20	.500-13
TL60A/2-E	802946	8.40	2.87	7.56	1.938	.250-20	.500-13

Electro/Mechanical Limit Switch Option For Nexen Torque Limiters

Models TL20-50A, A/-E, A-E/2. . . Product Number 801571

Models TL60A-E, A-E/2 . . . . . Product Number 801572

TL-AC SERIES TORQUE LIMITERS, SET COLLAR MOUNTED

TL-AC Series Torque Limiters provide:

- **14 Models** to choose from
- Torque up to 27,700 In. Lbs. @ 80 psi
- Operating Speed up to 2000 rpm
- Bore Sizes ranging from 0.875 to 2.438 inches
- Remote torque adjustment with Nexen's **Single** and **Double Air Pressure Circuits**
- Many models available in either high torque or low torque versions
- Limit Switch Assembly with 3 ft. cord and hardware included on all models

TL-AC Series Torque Limiters, Set Collar Mount

Model	Product Number	Speeds Up to RPM	Torque Up to (In. Lbs.)	MAX. Bore (In)	Key Size (SQ)	Shipping Wt. (Lbs)
TL20-AC	801500	1800	860	0.875	0.188	7
TL20-AC/2	801504	1800	400	0.875	0.188	7
TL30-AC	801510	1650	2150	1.125	0.250	10
TL30-AC/2	801514	1650	800	1.125	0.250	10
TL40-AC	801520	1350	4190	1.625	0.375	16
TL40-AC/2	801524	1350	1500	1.625	0.375	16
TL50-AC	801530	1200	6230	1.750	0.375	20
TL50-AC/2	801534	1200	2200	1.750	0.375	20
TL60-AC	801540	1050	10820	1.938	0.500	30
TL60-AC/2	801544	1050	3800	1.938	0.500	30
TL70-AC	801550	950	15000	2.188	0.500	45
TL70-AC/2	801554	950	6700	2.188	0.500	45
TL80-AC	801560	800	27700	2.438	0.625	70
TL80-AC/2	801564	800	12000	2.438	0.625	70

Minimum Shaft insertion halfway through Hub. Keys are customer furnished.

Operating Speed: Disengaging speeds are limited to the maximum allowable feet per minute rating of the rotary seal between the drive flange and drive ring. Torque Limiters are engaged when stationary.

NOTE: For higher speeds-consult Nexen.

Attachment Options

Pulleys, Sprockets, Gears

These can be attached to the clutch for offset shaft applications. Tapped holes are provided for ease of mounting. Nexen does not furnish these items. For minimum sprocket requirements, see page 369.

TL-AC SERIES TORQUE LIMITERS - SET COLLAR MOUNTED - APPROXIMATE DIMENSIONS (INCHES)

TLAC & TLAC/2

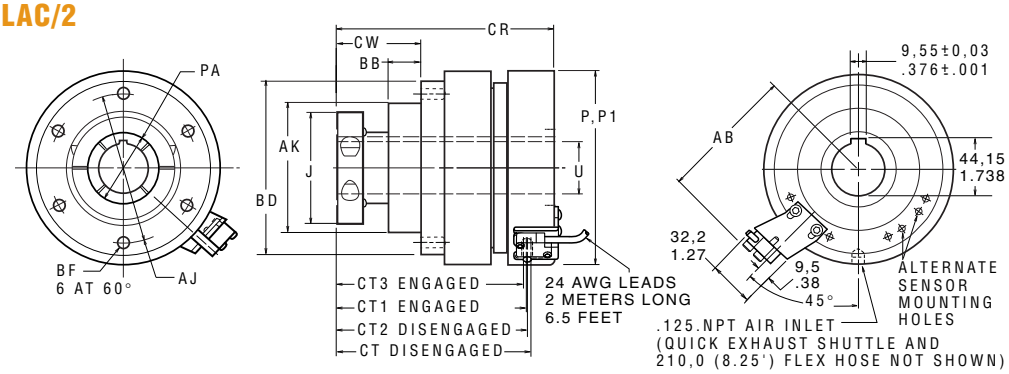

MODEL	PRODUCT NUMBER	AB	AJ	AK ±.001	BB	BD	BF	CR	CT	CT1	CT2	CT3	CW	KEYWAY WD	KEYWAY DP	P	P1	PA	J	U +.000 -.001
TL20-AC	801500	3.22	3.562	2.875	0.69	4.12	.312-18	5.61	4.92	4.70	5.67	5.42	1.76	0.188	0.094	4.56	4.56	1.378	2.25	.875
TL20-AC/2	801504	3.22	3.562	2.875	0.69	4.12	.312-18	5.61	4.92	4.70	5.67	5.42	1.76	0.188	0.094	4.56	4.56	1.378	2.25	.875
TL30-AC	801510	3.53	4.062	3.500	0.75	4.50	.312-18	5.72	5.03	4.81	5.81	5.59	1.99	0.250	0.125	5.09	5.09	1.772	3.00	1.125
TL30-AC/2	801514	3.53	4.062	3.500	0.75	4.50	.312-18	5.72	5.03	4.81	5.81	5.59	1.99	0.250	0.125	5.09	5.09	1.772	3.00	1.125
TL40-AC	801520	3.98	4.750	4.125	0.96	5.37	.375-16	6.67	5.83	4.76	7.19	6.83	2.51	0.375	0.125	6.06	6.06	2.362	3.50	1.625
TL40-AC/2	801524	3.98	4.750	4.125	0.96	5.37	.375-16	6.67	5.83	4.76	7.19	6.83	2.51	0.375	0.125	6.06	6.06	2.362	3.50	1.625
TL50-AC	801530	4.28	5.375	4.500	0.83	6.12	.500-13	7.00	6.25	6.03	7.33	7.11	2.36	0.375	0.187	6.56	6.56	2.559	4.00	1.750
TL50-AC/2	801534	4.28	5.375	4.500	0.83	6.12	.500-13	7.00	6.25	6.03	7.33	7.11	2.36	0.375	0.187	6.56	6.56	2.559	4.00	1.750
TL60-AC	801540	4.78	6.125	5.250	0.88	7.00	.500-13	7.47	6.70	6.48	8.26	8.05	2.53	0.500	0.250	7.56	7.56	2.953	4.50	1.938
TL60-AC/2	801544	4.78	6.125	5.250	0.88	7.00	.500-13	7.47	6.70	6.48	8.26	8.05	2.53	0.500	0.250	7.56	7.56	2.953	4.50	1.938
TL70-AC	801550	5.03	7.000	5.750	0.88	8.06	.625-11	8.58	7.69	7.47	8.97	8.75	2.70	0.500	0.250	8.31	8.31	3.347	4.75	2.188
TL70-AC/2	801554	5.03	7.000	5.750	0.88	8.06	.625-11	8.58	7.69	7.47	8.97	8.75	2.70	0.500	0.250	8.31	8.31	3.347	4.75	2.188
TL80-AC	801560	6.02	8.500	7.375	1.88	–	.625-11	10.19	8.02	7.80	9.50	9.28	3.62	0.625	0.312	9.25	9.50	3.741	5.00	2.438
TL80-AC/2	801564	6.02	8.500	7.375	1.88	–	.625-11	10.19	8.02	7.80	9.50	9.28	3.62	0.625	0.312	9.25	9.50	3.741	5.00	2.438

Torque Vs. Air Pressure

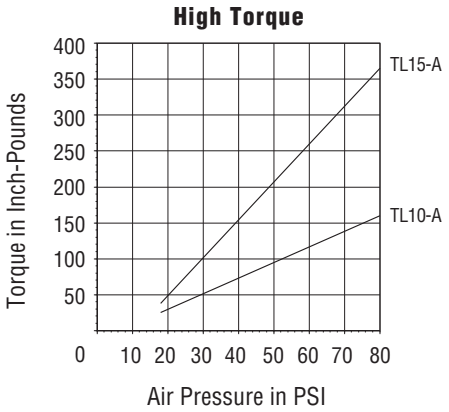

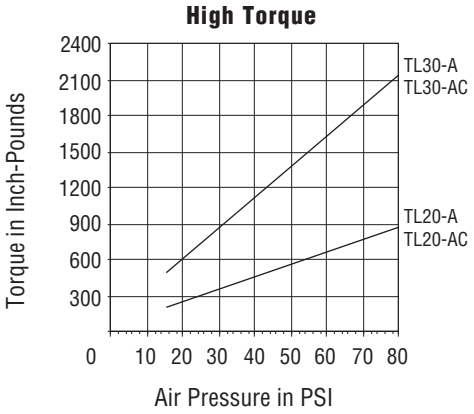

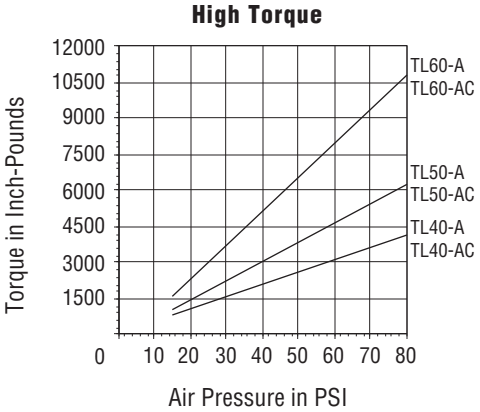

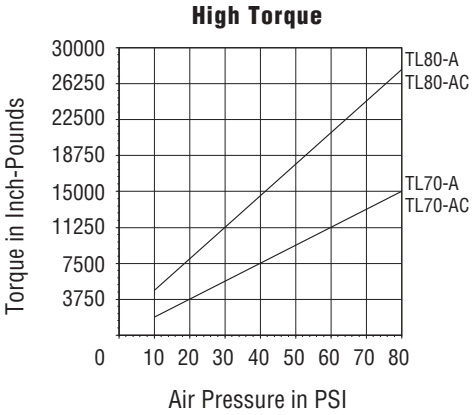

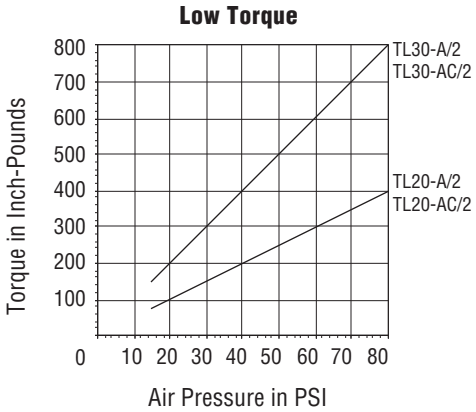

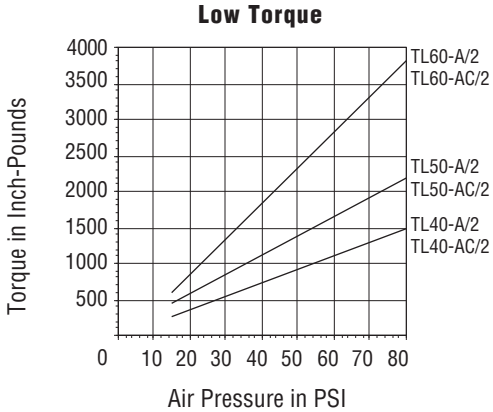

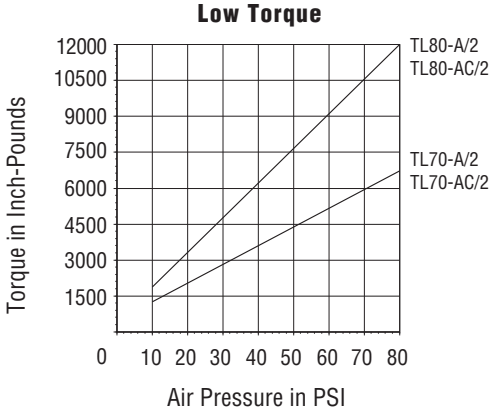

Electro/Mechanical Limit Switch Option For Nexen Torque Limiters

Models TL20-50AC, AC/2 . . . . . Product Number 801571
Models TL60-70AC, AC/2 . . . . . Product Number 801572
Models TL80AC, AC/2 . . . . . Product Number 801573

TORQUE LIMITER FLEXIBLE CLUTCH COUPLING ASSEMBLIES

Couple your shaft to a Torque Limiter with a Flexible Coupling Assembly. There are 14 Single Flex and 14 Double Flex Couplings, each designed to fit a specific Torque Limiter. Whatever the design style you'll get:

- High Misalignment Capability
- Torque ratings up to 12,000 In. Lbs. @ 80 psi
- Coupling discs made from composite materials provide the benefits of both a steel disc and elastomeric coupling

Other benefits include:

- Requires no lubrication
- Coupling adds no backlash to the drive
- Provides torsional stiffness
- Dampens shock and vibration through the power train
- Reverse Bushing Tapers for bushing installation from the inside of the coupling.

Find the Flexible Coupling that matches your Torque Limiter and your application specifications on this page.

- Nickel-plated exterior
- For additional corrosion protection, contact the factory

TORQUE LIMITER SINGLE & DOUBLE FLEXIBLE COUPLING SELECTION CHART

1. Determine the Torque Limiter required for your application and find it on the chart below;
2. Find the matching Flexible Coupling Assembly at the top of the column;
3. Double check the Flexible Coupling specifications to ensure conformity with all mating components;
4. A Taper Lock Bushing is required; see chart below for recommended part. This is customer furnished.
5. Clutch and Flexible Coupling Assembly must be ordered separately.

Single Flex #:	909980	910080	910280	910380	910480	910580	911780	
Double Flex #:	909981	910081	910281	910381	910481	910581	911781	
Model Size: or Torque Limiter Product #:	TL20	TL30	TL40	TL50	TL60	TL70	TL80	Model Suffix:
	801502	801512	801522	801532	801542	801552	801562	-A
	801506	801516	801526	801536	801546	801556	801566	-A/2
	802902	802912	802922	802932	802942	--	--	A-E
	802906	802916	802926	802936	802946	--	--	A-E/2

SINGLE & DOUBLE FLEXIBLE COUPLING PRODUCT DETAILS

Single Flex Product Number	Double Flex Product Number	Dodge Taper Lock® Bushing Number	Bore Range MIN (In)	Bore Range MAX (In)	Single Flex Shipping Wt. (Lbs)	Double Flex Shipping Wt. (Lbs)
909980	909981	1215	0.500	1.250	8	10
910080	910081	1615	0.500	1.625	10	13
910280	910281	2517	0.500	2.500	14	16
910380	910381	2517	0.500	2.500	22	25
910480	910481	3030	0.938	3.000	29	34
910580	910581	3535	1.188	3.938	70	82
911780	911781	4040	1.438	4.000	110	130

SINGLE FLEXIBLE COUPLING MISALIGNMENT CAPACITY

Product Number	Angular (Degrees)	Axial (In)	Parallel (In)
909980	1.5	0.065	0.011
910080	1.5	0.070	0.012
910280	1.5	0.090	0.014
910380	1.5	0.105	0.017
910480	1.5	0.120	0.019
910580	1.5	0.135	0.022
911780	1.5	0.155	0.026

DOUBLE FLEXIBLE COUPLING MISALIGNMENT CAPACITY

Product Number	Angular (Degrees)	Axial (In)	Parallel (In)
909981	3.0	0.130	0.063
910081	3.0	0.140	0.078
910281	3.0	0.180	0.091
910381	3.0	0.210	0.104
910481	3.0	0.240	0.117
910581	3.0	0.270	0.137
911781	3.0	0.310	0.170

NOTE: If parallel, angular and axial misalignment are all required, be certain that the combined percentage of each does not exceed 100%. For instance, if 100% of the parallel misalignment rating is required, no angular or axial misalignment is allowed. If 50% of the parallel misalignment rating is required, only 50% of the angular misalignment OR 50% of the axial rating will be available.

REVERSE BUSHING TAPERED COUPLINGS

Single Flex #:	909984	910084	910280	910384	910480	910584	911784	
Double Flex #:	909985	910085	910285	910385	910485	910585	911785	
Model Size: or Torque Limiter Product #:	TL20	TL30	TL40	TL50	TL60	TL70	TL80	Model Suffix:
	801502	801512	801522	801532	801542	801552	801562	-A
	801506	801516	801526	801536	801546	801556	801566	-A/2
	802902	802912	802922	802932	802942	--	--	A-E
	802906	802916	802926	802936	802946	--	--	A-E/2

TL SERIES FLEXIBLE COUPLING ASSEMBLIES - APPROXIMATE DIMENSIONS (INCHES)

Single Flex

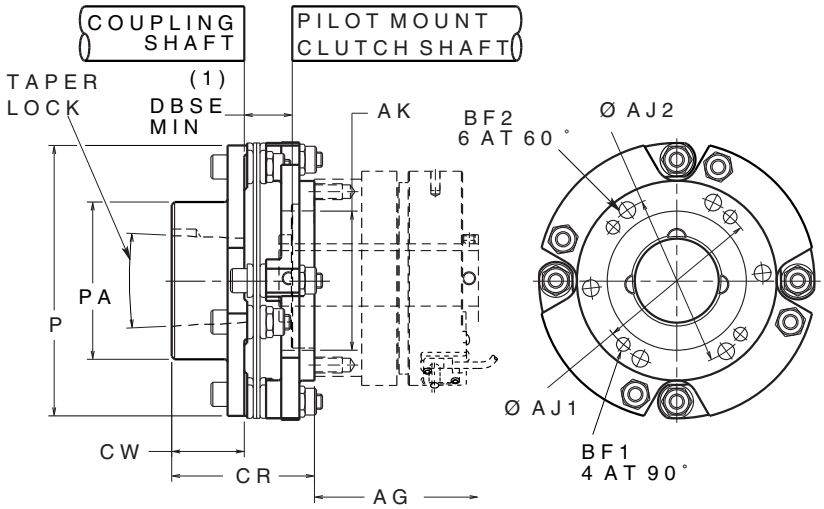

DBSE (1) = Distance Between Shaft Ends. Less than MIN requires equipment removal for service; The MAX distance is dependent on the torque limiter.

PRODUCT NUMBER	AG	AJ1	AJ2	AK +.001 -.000	HOLE SIZE BF1	HOLE SIZE BF2	TAPER LOCK	TAPER LOCK BORE MIN.	TAPER LOCK BORE MAX.	BF1 BOLT SIZE	CR	CW	DBSE MIN.	DBSE MAX.	P	PA	BF2 BOLT SIZE
909980	4.24	3.437	3.562	2.875	.265	.327	1215	0.500	1.250	.250-20 x 1.00	2.95	1.50	0.39	2.63	5.65	3.25	.312-18 x 1.25
910080	4.21	4.062	4.062	3.500	.265	.327	1615	0.500	1.625	.250-20 x 1.00	3.17	1.50	0.52	2.23	6.38	3.88	.312-18 x 1.25
910280	4.66	4.750	4.750	4.125	.265	.390	2517	0.500	2.500	.250-20 x 1.25	3.70	1.75	0.59	1.75	7.25	4.88	.375-16 x 1.50
910380	5.15	5.250	5.375	4.500	.327	.515	2517	0.500	2.500	.312-18 x 1.25	4.61	2.50	0.86	1.33	8.38	5.00	.500-13 x 1.50
910480	5.47	6.125	6.125	5.250	.327	.515	3030	0.938	3.000	.312-18 x 1.50	5.31	3.00	0.88	1.48	9.50	5.75	.500-13 x 1.75
910580	6.39	7.000	7.000	5.750	.515	.640	3535	1.188	3.938	.500-13 x 1.75	6.23	3.53	1.02	—	11.38	6.75	.625-11 x 2.00
911780	7.16	8.500	8.500	7.375	.515	.640	4040	1.438	4.438	.500-13 x 2.50	7.95	4.12	1.06	—	13.12	7.50	

Double Flex

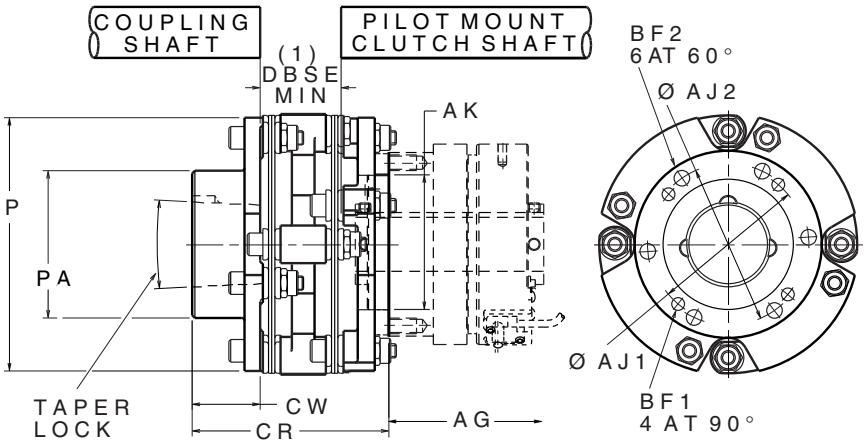

DBSE (1) = Distance Between Shaft Ends. Less than MIN Requires equipment removal for service; The MAX distance is dependent on the torque limiter.

(2) Blade ID is the ID of the intermediate member.

PRODUCT NUMBER	AG	AJ1	AJ2	AK +.001 -.000	HOLE SIZE BF1	HOLE SIZE BF2	TAPER LOCK	TAPER LOCK BORE MIN.	TAPER LOCK BORE MAX.	BF1 BOLT SIZE	CR	CW	DBSE MIN.	DBSE MAX.	P	PA	BLADE SIZE
909981	4.24	3.437	3.562	2.875	.265	.327	1215	0.500	1.250	.250-20 x 1.00	4.34	1.50	1.78	4.02	5.65	3.25	2.75
910081	4.21	4.062	4.062	3.500	.265	.327	1615	0.500	1.625	.250-20 x 1.00	4.86	1.50	2.20	3.92	6.38	3.88	3.00
910281	4.66	4.750	4.750	4.125	.265	.390	2517	0.500	2.500	.250-20 x 1.25	5.70	1.75	2.59	3.47	7.25	4.88	3.38
910381	5.15	5.250	5.375	4.500	.327	.515	2517	0.500	2.500	.312-18 x 1.25	6.92	2.50	3.17	3.64	8.38	5.00	4.12
910481	5.47	6.125	6.125	5.250	.327	.515	3030	0.938	3.000	.312-18 x 1.50	7.89	3.00	3.45	4.06	9.50	5.75	4.38
910581	6.39	7.000	7.000	5.750	.515	.640	3535	1.188	3.938	.500-13 x 1.75	9.28	3.53	3.81	—	11.38	6.75	5.25
911781	7.16	8.500	8.500	7.375	.515	.640	4040	1.438	4.438	.500-13 x 2.50	11.72	4.12	4.69	—	13.12	7.50	6.00

METRIC TL-A & TL-AE SERIES TORQUE LIMITERS, SET SCREW MOUNTED

Metric TL-A & TL-AE Series Torque Limiters provide:

- **12 Models** to choose from
- Torque up to 1350 Nm
- Operating Speed up to 2000 rpm
- Standard bore sizes ranging from 15 to 75 millimeters
- Minimum bore sizes ranging from 20 to 45 millimeters–you assemble and machine
- Limit Switch Assembly with 0,91 meters long cord and hardware included on all models

TL-AE Metric Series Torque Limiters, Set Screw Mount

Model	Product Number	Speeds Up to RPM	Torque Up to (Nm)	Bore (mm)	Shipping Wt. Wt (kg)
TL20-AE	802904	1800	100	20	3,2
TL30-AE	802914	1650	260	25	4,5
TL40-AE	802924	1350	500	35	7,1
TL50-AE	802934	1200	750	40	9
TL60-AE	802944	1050	1300	45	13,5

Minimum Shaft insertion halfway through Hub. Keys are customer furnished.

Operating Speed: Disengaging speeds are limited to the maximum allowable feet per minute rating of the rotary seal between the drive flange and drive ring. Torque Limiters are engaged when stationary.

NOTE: For higher speeds-consult Nexen.

Minimum Bored TL-A Are Not Totally Enclosed

Minimum bore Models are supplied unassembled with machinable hubs.

Model	Product Number	Speeds Up to RPM	Torque Up to (Nm)	Bore (mm)	Key Size (WD X DP)	Shipping Wt. Wt (kg)
TL10-A	951302	2000	21	15	5 X 2,3	3,2
TL15-A	951312	2000	41	15	5 X 2,3	3,2
TL20-A	951203	1800	100	12,7		3,2
TL30-A	951213	1650	260	15,9		4,5
TL40-A	951223	1350	500	19,1		7,1
TL50-A	951233	1200	750	25,4		9
TL60-A	951243	1050	1300	31,8		13,5

Minimum Shaft insertion halfway through Hub. Keys are customer furnished.

Operating Speed: Disengaging speeds are limited to the maximum allowable feet per minute rating of the rotary seal between the drive flange and drive ring. Torque Limiters are engaged when stationary.

NOTE: For higher speeds-consult Nexen.

Attachment Options

Pulleys, Sprockets, Gears

These can be attached to the clutch for offset shaft applications. Tapped holes are provided for ease of mounting. Nexen does not furnish these items. For minimum sprocket requirements, see page 369.

Torque Vs. Air Pressure

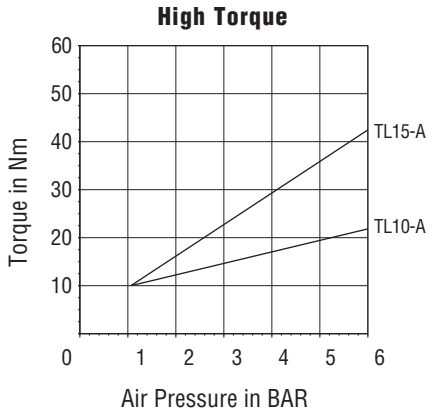

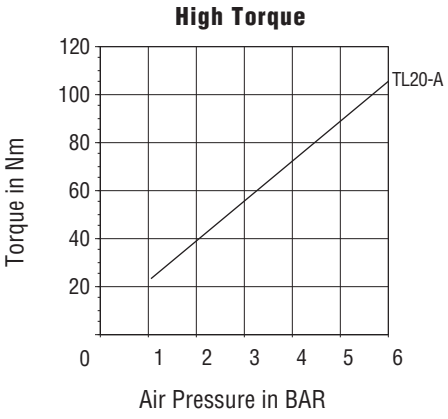

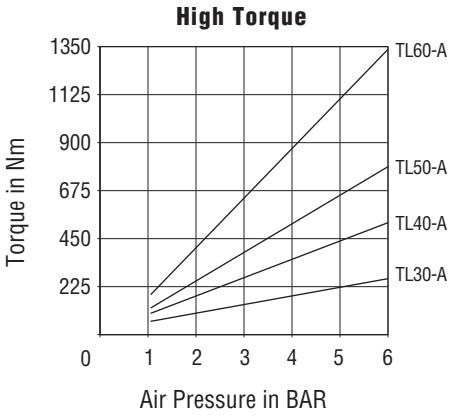

Torque (In. Lbs.) = Nm x 8.849
PSI = Bar ÷ .0689

TL-A & TL-AE METRIC SERIES TORQUE LIMITERS, SET SCREW MOUNTED - APPROXIMATE DIMENSIONS (MILLIMETERS)

TL10-A, TL15-A, TL20-A, TL30-A, TL40-A, TL50A & TL60-A

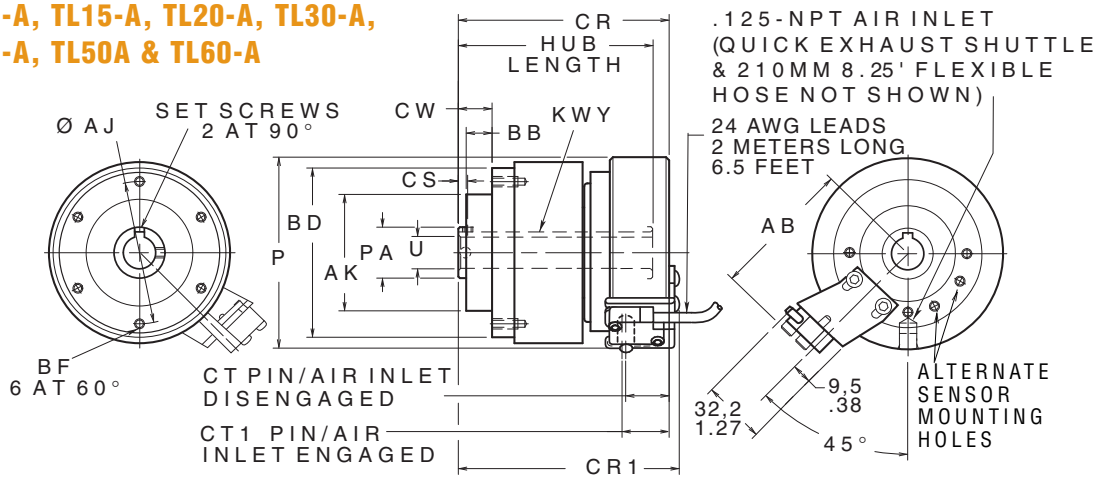

MODEL	PRODUCT NUMBER	AB	AJ	AK^{h8}	BB	BD	BF	CR	CR1	CS	CT	CT1	CW	KL	KEYWAY WD	KEYWAY DP	P	PA	U^{H7}	HUB LENGTH	SET SCREW
TL10-A	951302	71	70	57	13	83	M6	107	140	5	22	24	17	80	5	2,3	94	25	15	100	M5
TL15-A	951312	71	70	57	13	83	M6	107	140	5	22	24	17	80	5	2,3	94	25	15	100	M5
TL 20-A	951202	82	90	72	18	104	M8	124	158	6	28	34	26	80	6	2,8	116	35	20	134	M6
TL 30-A	951212	90	103	88	19	114	M8	125	160	7	29	35	29	80	8	3,3	129	45	25	136	M6
TL 40-A	951222	101	122	104	24	137	M10	145	180	8	28	34	36	80	10	3,3	154	60	35	155	M10
TL 50-A	951232	109	136	114	21	156	M12	149	184	8	29	35	33	80	12	3,3	167	65	40	164	M10
TL 60-A	951242	121	160	133	22	174	M12	160	190	10	35	41	37	80	14	3,8	192	75	45	175	M12

NOTE: Drawings are expressed in third angle projection.

TL20-AE, TL30-AE, TL40-AE, TL50AE & TL60-AE

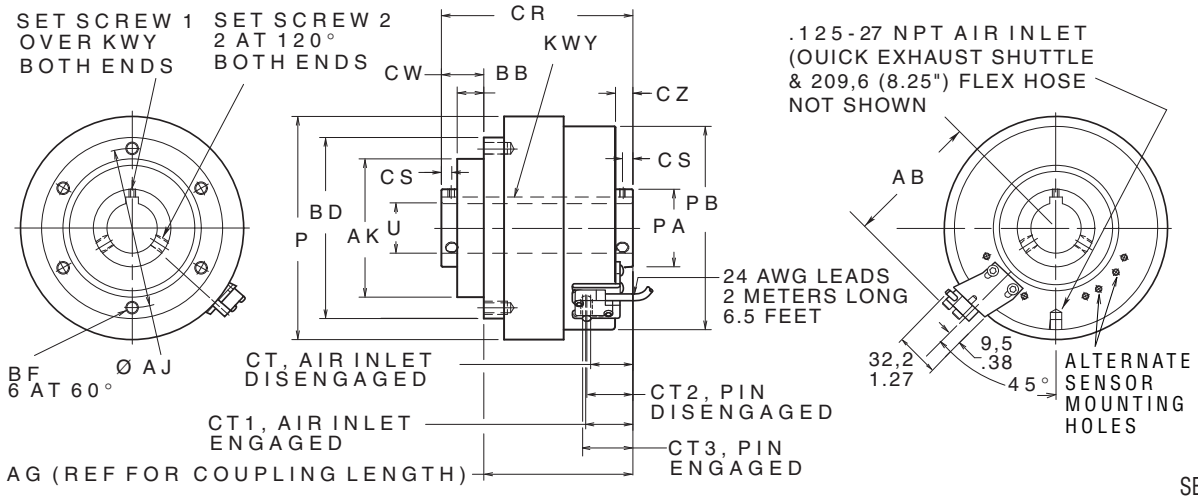

MODEL	PRODUCT NUMBER	AB	AC	AD	AE	D^{H7}	CZ	LD	LD1	CS	LG	LG1	LG2	LG3	LH	M	N^{h8}	KEYWAY WD	KEYWAY DP	P	PB	S	T	SET SCREW 1	SET SCREW 2
TL20-AE	802904	82	128	79	34	20	10	123	148	6	27	31	30	34	26	90	72	6	2,8	105	116	M8	18	M5	M6
TL30-AE	802914	90	156	87	44	25	10	129	154	6	27	32	30	35	29	103	88	8	3,3	114	129	M8	19	M5	M6
TL40-AE	802924	101	169	99	59	35	13	145	167	8	30	35	34	39	32	122	104	10	3,3	137	154	M10	20	M5	M10
TL50-AE	802934	109	194	106	64	40	13	152	173	8	31	35	34	38	35	136	114	12	3,3	155	167	M12	22	M6	M10
TL60-AE	802944	121	214	119	73	45	17	163	176	9	37	42	41	46	36	160	133	14	3,8	178	192	M12	20	M6	M12

NOTE: Drawings are expressed in third angle projection.

Electro/Mechanical Limit Switch Option For Nexen Torque Limiters

Models TL20-50A-E, A-E/2 . . . . . Product Number 801571

Models TL60A-E, A-E/2 . . . . . Product Number 801572

OVERLOAD PROTECTION SYSTEM

Overload Protection System (OPS) is a combination of a flange-mounted, air engaged clutch and an electronic control that electronically detects clutch slip in torque overload conditions. Upon recognition of the overload, the system disengages the clutch, and can operate an external signalling device (i.e. warning light/alarm).

OPS includes two proximity sensors: one mounted on the clutch input, and one mounted on the clutch output. The control compares the signals from the individual sensors and determines if the clutch is slipping.

- The clutch is re-engaged at any speed, and at any position of the clutch interface
- The clutch torque is remotely adjusted with a simple air regulator
- The motor disconnects from the load when an overload occurs, so the motor runs cooler and more efficiently, without current surges and blown fuses
- The OPS also prevents the motor rotor inertia from contributing to damage caused by torque overloads
- The FMCEclutch is self-contained and protected from dirt and debris
- The controller is available in a NEMA Type 12 enclosure, or as a stand-alone board for panel mounting
- OPS operates on standard AC or DC voltages and frequencies
- Quick connect/disconnect wire connection coupling
- Soft-start capabilities provides more sensitive overload protection than ball-detent mechanisms

Overload Protection System (OPS)

Model:	OPS - Chassis Version	OPS - Enclosed Version
Product Number:	964403	964404
Input Power Options:	12 VDC @ 800 mA 115 VAC @ 110 mA 230 VAC @ 57 mA	12VDC @ 800 mA 115 VAC @ 110 mA 230 VAC @ 57 mA
Inputs:	Inductive proximity sensors: npn, open collector, current sinking or NAMUR	Inductive proximity sensors: npn, open collector, current sinking or NAMUR
Outputs:	Relay: 28 VDC, 115/230 VAC @ 2 Amps. K1: 12 VDC @ .6 Amps power available, used to operate clutch solenoid. K2: available for auxiliary use. No power available.	Relay: 28 VDC, 115/230 VAC @ 2 Amps. K1: 12 VDC @ .6 Amps power available, used to operate clutch solenoid. K2: available for auxiliary use. No power available.

NEMA Motor/Frame Selection Chart

Use this chart as specification and operational criteria for your application.

HP of Motor	RPM	Frame Number	Motor Shaft (IN)	Clutch-Brake Model Number
1/4	1800	56C	0.625	FMCE-625
1/4	1200	56C	0.625	FMCE-625
1/3	1800	56C	0.625	FMCE-625
1/3	1200	56C	0.625	FMCE-625
1/2	1800	56C	0.625	FMCE-625
1/2	1200	56C	0.625	FMCE-625
1/2	900	143TC	0.875	FMCE-875
3/4	1800	56C	0.625	FMCE-625
3/4	1200	143TC	0.875	FMCE-875
3/4	900	145TC	0.875	FMCE-875
1	1800	56TC	0.625	FMCE-625
1	1800	143TC	0.875	FMCE-875
1	1200	145TC	0.875	FMCE-875
1	900	182TC	1.125	FMCE-1125
1-1/2	1800	145TC	0.875	FMCE-875
1-1/2	1200	182TC	1.125	FMCE-1125
1-1/2	900	184TC	1.125	FMCE-1125
2	1800	145TC	0.875	FMCE-875
2	1200	184TC	1.125	FMCE-1125
2	900	213TC	1.375	FMCE-1375
3	1800	182TC	1.125	FMCE-1125
3	1200	213TC	1.375	FMCE-1375
3	900	215TC	1.375	FMCE-1375
5	1200	215TC	1.375	FMCE-1375
5	1800	184TC	1.125	FMCE-1125
7-1/2	1800	213TC	1.375	FMCE-1375
10	1800	215TC	1.375	FMCE-1375

Torque Vs. Air Pressure

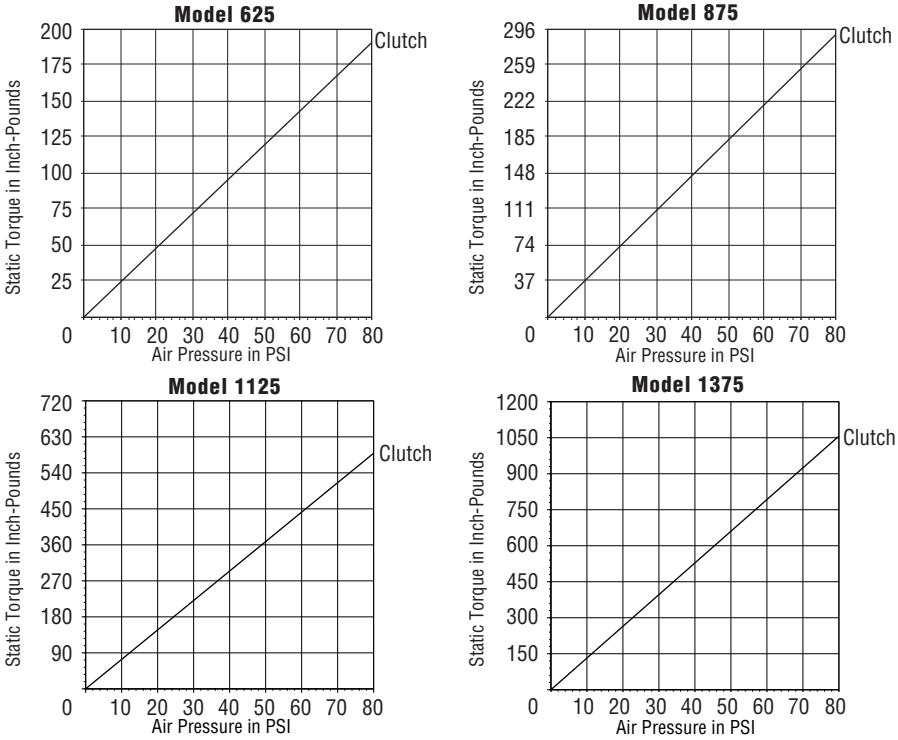

NOTE: Dynamic torque is approximately 85% of static torque.

OVERLOAD PROTECTION SYSTEM - APPROXIMATE DIMENSIONS (INCHES)

Models 625, 875, 1125 & 1375

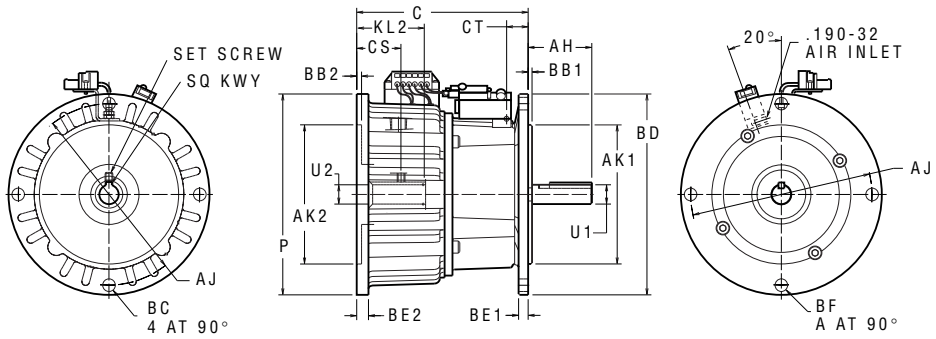

MODEL	PRODUCT NUMBER	AH	AJ	AK1 $^{+.000}_{-.002}$	AK2 $^{+.002}_{-.000}$	BB1	BB2	BE1	BE2	BF	C	CS	CT	KL1	KL2	P	KEY (SQ)	KEYWAY WD	KEYWAY DP	U1 $^{+.000}_{-.001}$	U2 $^{+.001}_{-.000}$
625	964405	2.06	5.875	4.498	4.502	0.31	0.16	.31	.38	.406	5.55	1.43	0.75	1.38	2.13	6.30	0.188	0.188	0.094	0.625	0.625
875	964406	1.98	5.875	4.498	4.502	0.39	0.19	.39	.56	.406	5.98	1.47	0.94	1.38	2.24	7.81	0.188	0.188	0.094	0.875	0.875
1125	964407	2.58	7.250	8.498	8.502	0.54	0.19	.54	.37	.562	8.01	1.75	1.09	2.00	2.90	9.63	0.250	0.250	0.125	1.125	1.125
1375	964408	3.08	7.250	8.498	8.502	1.12	0.19	1.12	.37	.531	9.04	1.96	1.44	2.56	3.39	10.38	0.250	0.250	0.125	1.375	1.375

OPS Controller – Chassis Version

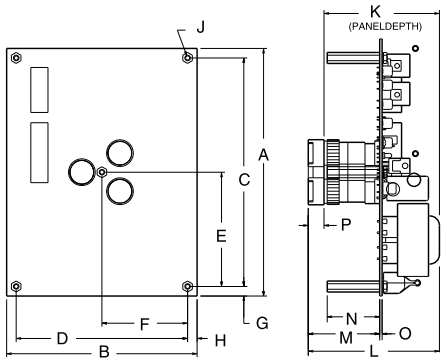

MODEL	PRODUCT NUMBER	A	B	C	D	E	F	G	H	J	K	L	M	N	O	P
OPS Chassis	964403	6.50	5.00	6.00	4.50	3.00	2.25	0.25	0.25	#6-32UNC-2B.38DP 5X	3.03	3.44	1.88	1.38	0.06	0.41

OPS Controller – Enclosed Version

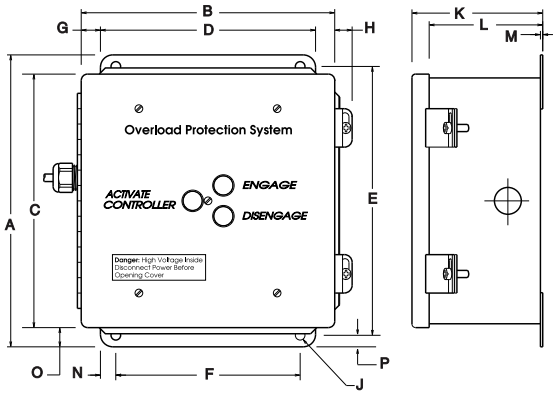

MODEL	PRODUCT NUMBER	A	B	C	D	E	F	G	H	J	K	L	M	N	O	P
OPS Enclosed	964404	9.50	8.25	8.25	7.00	8.75	6.00	0.62	0.57	0.31 HOLE 4X	4.25	3.69	0.07	0.50	0.62	0.37

Order By Model Description MTLXXX - XXX - XX - XXX - XX/XX - XXX - XX

- MTLXXX: Mechanical Torque Limiter (MTL)
- XXX: Size (15 - 2500
- XX: Type
- XXX: Function
- XX: Bore Diameter *
- XX/XX: Torque Range (Newton Meters)
- XXX: Torque Setting
- XX: Finish

MTL	Mechanical Torque Limiter			
Size	15 - 2500			
Type	PMT	Pilot Mount w/tapered collar	2TC	Two Tapered Collars / Coupling
	PMK	Pilot Mount with keyed bore	PCC	Press-fit / Two Clamp Collar Coupling
	2CC	Two Clamp Collars / Coupling	ECC	Elastomer (spider) Coupling / Two Clamp Collars
Bore Diameter	"D" or "D1" * Include a second Bore field "D2" for coupling adapters			
Function	SP	Single Position		
	MP	Multiple Position		
	FD	Full Disengagement		
Finish		No Designation - Standard Finish - Black Oxide		
	SS	Stainless Steel		
	RP	Rust Protection		

Adjustable Torque Range (Newton Meters)

Size	15	30	60	150	200	300	500	800	1500	2500
Single or Multiposition (Nm)	5-15 8-20 [2] 12-25 [1] 20-40 [2]	5-20 10-30 20-60 [1] 50-100 [1]	10-30 25-80 50-115	20-70 45-150 [1] 80-180 [2] 80-225 [1]	30-90 60-160 140-280 250-400 [1]	100-200 150-240 300-500 [2] 220-440 [1]	80-200 200-350 320-650	400-650 500-800 650-950	600-800 700-1200 1000-1800	1500-2000 2000-2500 2300-2800
Full Disengagement (Nm)	7-15	8-20 16-30	10-30 20-40 30-60	20-60 40-80 80-150	80-140 130-200	120-180 130-300	50-150 100-300 250-500	200-400 450-850	1000-1250 1250-1500	1400-2200 1800-2700

[1] PMT and PMK only [2] 2CC and ECC only

Maximum Bore (mm)

Size	15	30	60	150	200	300	500	800	1500	2500
Tapered Bore	22	23	29	37	44	56	60	60	70	100
Clamp Collar Bore	22	25	32	38	45	56	60	75	80	- -

Adjustable Torque Range (in-lbs)

Size	15	30	60	150	200	300	500	800	1500	2500
Single or Multiposition (in-lbs)	44-133 71-177 [2] 106-221 [1] 117-354 [2]	44-177 88-265 177-531 [1] 442-885 [1]	85-265 210-705 [1] 708-1593 [2] 442-1018 [1]	175-620 390-1325 705-1990	256-795 530-1770 1240-2475 2212-3540 [1]	855-1770 1325-2125 2655-4425 [2] 1945-3895 [1]	705-1770 1770-3095 2830-5750	3540-5750 4425-7080 5750-8405	5305-7080 6194-10620 8850-15925	13275-17700 17700-22125 20350-24775
Full Disengagement (in-lbs)	60-130	70-175 140-265	85-265 175-350 265-530	175-530 350-705 705-1325	705-1240 1150-1770	1060-1590 1150-2655	440-1325 885-2650 2210-4425	1770-3540 3980-7520	8850-11060 11060-13275	12390-19470 15925-23890

[1] PMT and PMK only [2] 2CC and ECC only

Maximum Bore (in)

Size	15	30	60	150	200	300	500	800	1500	2500
Tapered Bore	0.875	0.906	1.125	1.437	1.750	2.125	2.250	2.250	2.750	3.938
Clamp Collar Bore	0.875	1.000	1.125	1.500	1.750	2.125	2.250	2.937	3.125	- -
Keyed Bore	0.750	1.375	1.187	1.500	1.750	1.937	2.250	2.312	2.875	3.750

Order Example:

Select a single position torque limiter / tapered bushing to fit a 1.875 diameter shaft and a trip torque of 1200 in-lbs.
MTL Selection: MTL300 - PMT - SP - 1.875 - 1060/1590 - 1200

nexen

"Air Champ"

In accordance with Nexen's established policy of constant product improvement, the specifications contained in this document are subject to change without notice. Technical data listed in this document are based on the latest information available at the time of printing and are also subject to change without notice. For current information, please consult: www.nexengroup.com

FRICTION BRAKES

This Section Contains: . . . .Page

ECLIPSE™ MOTOR BRAKES

Product Overview 126-127
Servomotor Brakes
Models 2, 3, 4, 5 128-129
Servomotor Brakes
Models 7, 9, 11 130-131
Linear Stage &
Linear Motion Brakes 131
Spring-set Motor Brakes, NEMA . . 132-133
Spring-set Motor Brakes, IEC B5 . . 134-135

FRICTION BRAKES

Micro Model (M) 136
Bantam Weight (BW) 137
Straight Bore,
S-450, S-600, S-800 138-139
Straight Bore,
S-1000, S-1200, S-1400 140-141
Tapered Bore, Models T-450, T-450A,
T-600, T-600A, T-800, T-800A . . .142-143
Tapered Bore, T-1000, T-1000A,
T-1200, T-1400 144-145

SPRING ENGAGED BRAKES

Tapered Bore, Models
TSE-450, TSE-600, TSE-800 . . .146-147
Tapered Bore, Models
TSE-1000, TSE-1200, TSE-1400 . .148-149
FMBES C-Faced Motor Brakes 150-151
SE Model Spring Engaged 152-155
MB Model Spring Set 156-157

This Section Contains: . . . .Page

CALIPER BRAKES

Single Puck Drag Brakes 158-159
DB, DBSE Model Disc Caliper 160-161
BC Model Air Actuated Caliper 162-163
BC Model Spring Actuated Caliper .164-165
BD Model Air Actuated Caliper 166-167
BD Model Spring Actuated Caliper .168-169
VC500 Single Post Brake Caliper 170-171
SPC Air Actuated Post Caliper 172
SPC Spring Actuated Post Caliper 173
Caliper Brake Discs & QD Bushings . .174-175

DRUM BRAKES

Model J & K Drum Brakes 176-177
Model 8K & 12K Standard 178-179
Model 4K, 8K & 12K Hinge Top . . .180-181

DUAL PLATE BRAKES

DPB-9T & 11T Models 182-183
DPB-13T & 15T Models 184-185

HIGH CAPACITY BRAKES

DFB & QFB Series Overview 186-187
DFB Model Spring Engaged 188-189
QFB Model Spring Engaged 190-191

METRIC BRAKES

Straight Bore, S-450, S-600, and
S-800 & S-1000 192-193
Spring Engaged Straight Bore,
SSE-450 & SSE-600 194-195
Spring Engaged Straight Bore,
SSE-800 & SSE-1000 196-197

SERVOMOTOR BRAKES

High-torque, Spring-engaged, Power-off Brakes

Nexen Spring-engaged, Air-released Products

Emergency stop, spring-engaged brakes to fit every servo, stepper or alternating current motor up to 20 horsepower. Eclipse brakes are designed to match NEMA and IEC flange and shaft dimensions.

Safety Brake

Nexen's Eclipse™ brakes function to safely hold a load in place in power-off situations. These units hold the load stationary until the motor moves again, helping to:

- Provide worker safety
- Prevent machine damage
- Perform emergency stops
- Protect product
- Function during power failures
- Reduce machine coasting time
- Provide safety during lock-out/tag-out procedures

ECLIPSE™ PRODUCTS

Servomotor Brake

Nexen has an Eclipse brake for every servo motor. Flanges range in size from 57 mm [2.25 in] up to 265 mm [10.43 in] square with shaft diameters from 6,35 mm [0.25 in] up to 48 mm [1.89 in]. Brake torque is four times that of servo motor internal brakes and ranges from 2,25 Nm [20 in-lb] to 125 Nm [1100 in-lb]. These low inertia brakes provide the holding power needed for every application.

AC Motor Brake, NEMA and IEC flanged

Nexen's motor brakes mount directly to the face of NEMA motor frame sizes 56C to 254TC and IEC motor frame sizes 80 to 132 M. These holding brakes provide torque up to 125 Nm [1100 in-lb].

Linear Stage Brake

The Eclipse Stage Brake mounts to support end of a ball screw or belt drive linear stage. The brake is available in NEMA 23, 34 and 42 frame sizes with holding capacities up to 22 Nm [200 in-lb] torque.

Cool Operation

Holding brakes are typically disengaged with air or electricity. Brakes using air have several times more torque than similar sized electric brakes. When electric brakes remain disengaged for long periods of time, the electric coil is on and consuming energy. This energy, in the form of heat, is absorbed by the brake and can rob the brake of efficiency when it's called on to stop and/or hold the load. Conversely, when an air brake remains disengaged, a small amount of compressed air is dead-headed into an air chamber keeping the springs from engaging the brake. No energy is consumed and the brake remains cool until it is applied which dramatically reduces the chance of brake fade (loss of torque).

SERVOMOTOR BRAKE, INSTALLED, ISOMETRIC AND END VIEWS

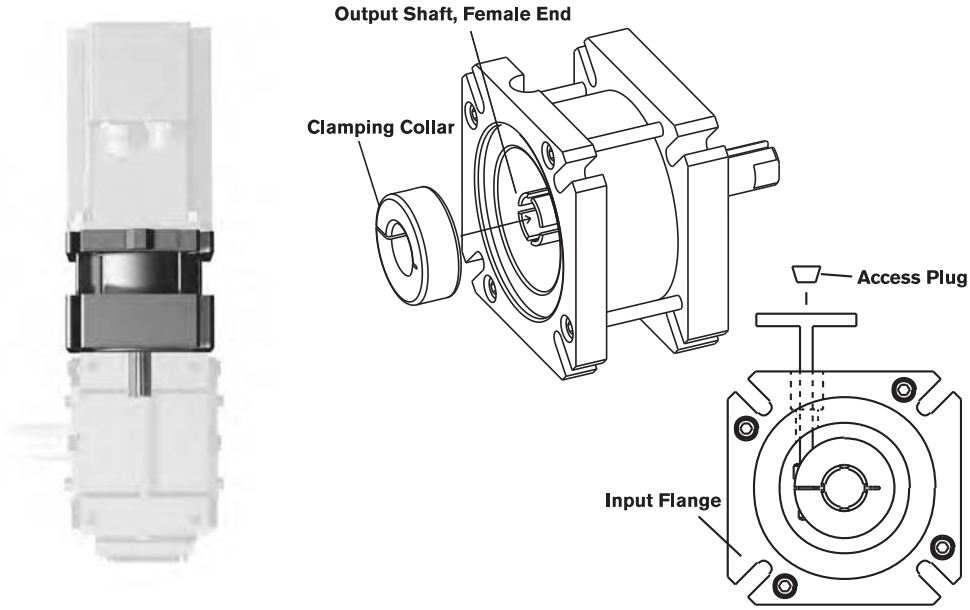

SERVOMOTOR BRAKES

High-torque, Spring-engaged, Power-off Brakes

ECLIPSE™ SERVOMOTOR BRAKE

The Eclipse Servomotor Brake family now includes a line of spring-engaged servomotor brakes equipped with a split hub, clamp collar for attachment to the servomotor shaft. With supe rior torque outputs, these brakes provide rugged durability for dynamic stopping applications. Eclipse brakes offer consistent long-lasting performance with no maintenance needed. Nexen's servomotor brakes deliver at least 20-50% more torque than competitive brakes and provide safe, simple operation.

The easy-to-use, flange-mounted Eclipse brakes solve many of the problems associated with brake motors. Use them with standard motors for brake motor functionality and off-the-self availability. Nexen offers servomotor brakes in a variety of input and output flange/shaft combinations, all designed to increase the safety of your machines.

Servo Motor Brake with NEMA output flange

- Simple installation with split hub, shaft collar
- Spring-engaged, air-released
- True pilot mounting
- High torque when compared to electric brakes
- Zero backlash for precision holding
- Bidirectional braking
- Long facing life
- Cool operation, high efficiency, less energy consumption
- Designed for horizontal or vertical applications
- Strong enough to stall the servo motor
- Quick, safe emergency stopping and holding
- Remains engaged and holds load during motor change-outs
- Ideal for use with linear ball-screw stages and belt drives
- Field Serviceable
- Low inertia
- Output flange replicates motor flange
- Quick exhaust valve included
- High torsional rigidity
- High overhung load capacity
- Meets IP67 dust and waterproof standards

Optional Solenoid Valve allows for:

- Visual disengagement indication
- Manual disengagement on valve
- Simple connections with 24VDC control and 80 PSIG shop air

PRODUCT NUMBER 964650

ECLIPSE MODELS 2, 3, 4, 5, CUTAWAY VIEW

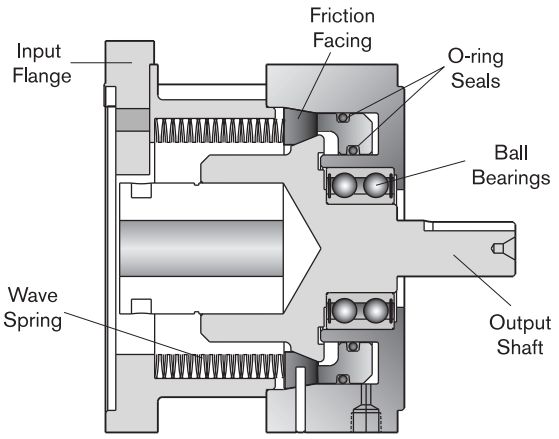

ECLIPSE MODELS 7, 9, 11, CUTAWAY VIEW

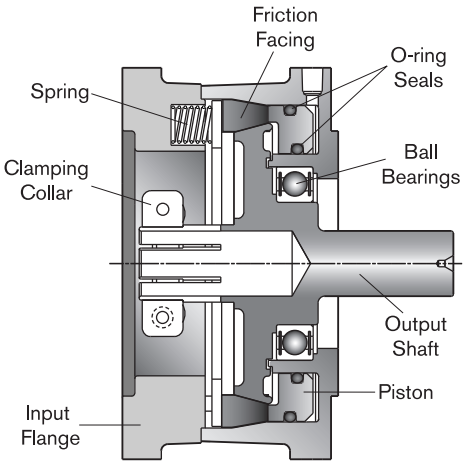

SERVO MOTOR BRAKES *Models 2, 3, 4, 5*

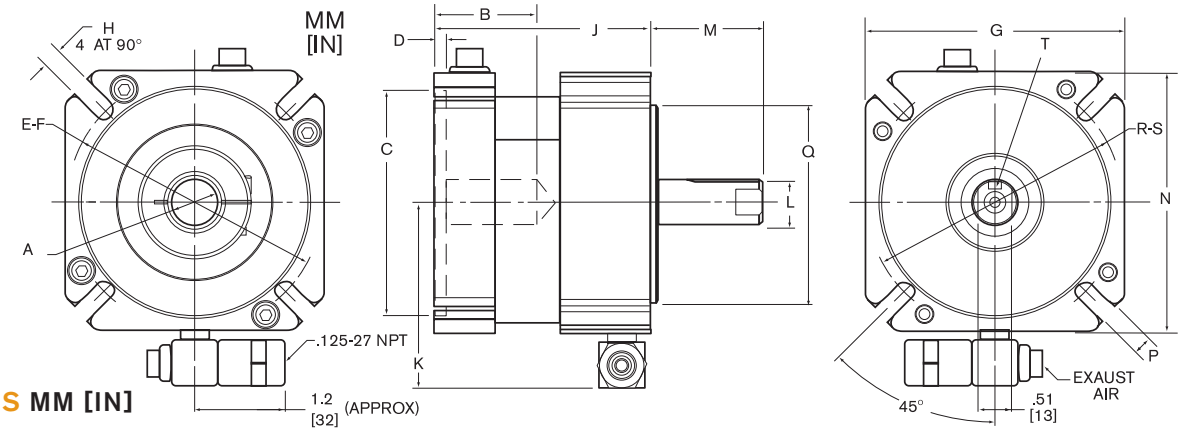

DIMENSIONS MM [IN]

PRODUCT NUMBER	NEMA SIZES	BORE DIA. (A)	MAX SHAFT INSERT (B)	MAX PILOT (C)	PILOT DEPTH (D)	MIN - MAX BCD (E – F)	FLANGE (G)	TAP/ SLOT (H)	LENGTH (J)	QUICK EXHAUST (K)	SHAFT DIA. (L)	SHAFT LENGTH (M)	FLANGE (N)	BOLT SLOT OR TAPPED HOLE (P)	PILOT (Q)	MIN - MAX BC (R - S)	KEYWAY (T)
SIZE 2																	
964605	23	0.375	35,9 [1.41]	38,1 [1.50]	–	66,7 [2.625]	57,2 [2.25]	#10-24	70,3 [2.77]	50,6 [2]	0.375	31,8 [1.25]	57,2 [2.25]	#10-24	38,1 [1.50]	66,7 [2.625]	no key
964606	23	0.250	24,9 [0.97]	38,1 [1.50]	–	66,7 [2.625]	57,2 [2.25]	#10-24	70,3 [2.77]	50,6 [2]	0.250	20,6 [0.81]	57,2 [2.25]	#10-24	38,1 [1.50]	66,7 [2.625]	no key
SIZE 3																	
964717		13,0 [0.51]	37,0 [2.87]	73,0 [2.88]	4,0 [0.16]	85,0-108,7 [3.35-4.28]	92,0 [3.6]	7,0 [0.28]	77,7 [3.06]	65,0 [2.60]	13,0 [0.51]	30,0 [1.18]	92,0 [3.6]	5,6 [0.22]	73,0 [2.88]	98,4-108,7 [3.87-4.28]	no key
964713		14,0 [0.55]	37,0 [1.46]	50,0 [1.97]	5,0 [0.20]	95,0-108,7 [3.74-4.28]	92,0 [3.6]	7,0 [0.82]	77,7 [3.06]	65,0 [2.60]	14,0 [0.55]	30,0 [1.18]	92,0 [3.6]	7,0 [0.28]	50,0 [1.97]	95,0-108,7 [3.74-2.28]	no key
964714		14,0 [0.55]	37,0 [1.46]	70,0 [2.76]	4,0 [0.16]	85,0-108,7 [3.35-4.28]	92,0 [3.6]	7,0 [0.28]	77,7 [3.06]	65,0 [2.60]	14,0 [0.55]	30,0 [1.18]	92,0 [3.6]	7,0 [0.28]	70,0 [2.76]	85,0-108,7 [3.34-4.28]	no key
964718		14,0 [0.55]	37,0 [1.46]	73,0 [2.88]	4,0 [0.16]	85,0-108,7 [3.35-4.28]	92,0 [3.6]	7,0 [0.28]	77,7 [3.06]	65,0 [2.60]	14,0 [0.55]	30,0 [1.18]	92,0 [3.6]	5,6 [0.22]	73,0 [2.88]	98,4-108,7 [3.88-4.28]	5,0 [0.20]
964709		14,0 [0.55]	42,3 [1.67]	80,0 [3.15]	5,0 [0.2]	90,0-108,7 [3.54-4.28]	92,0 [3.6]	7,1 [0.28]	77,7 [3.06]	65,0 [2.6]	14,0 [0.55]	30,0 [1.20]	92,0 [3.6]	7,0 [0.28]	80,0 [3.10]	100,0-109,0 [3.9-4.29]	5,0 [0.2]
964710 [1]		14,0 [0.55]	42,3 [1.67]	80,0 [3.15]	5,0 [0.2]	90,0-108,7 [3.54-4.28]	92,0 [3.6]	7,1 [0.28]	77,7 [3.06]	65.0 [2.6]	14,0 [0.55]	30,0 [1.20]	92,0 [3.6]	7,0 [0.28]	80,0 [3.10]	100,0-109 [3.9-4.29]	5,0 [0.2]
964711 [2]		16,0 [0.63]	45 [1.77]	80,0 [3.15]	5,0 [0.2]	90,0-108,7 [3.54-4.28]	92,0 [3.6]	7,1 [0.28]	70,0 [2.76]	65,0 [2.6]	16,0 [0.63]	40,0 [1.57]	92,0 [3.6]	7,0 [0.28]	70,0 [2.76]	90,0-109,0 [3.54-4.29]	5,0 [0.20]
964716		15,88 [0.27]	37,0 [1.46]	80,0 [3.15]	5,0 [0.20]	90,0-108,7 [3.54-4.28]	92,0 [3.62]	7,1 [0.28]	77,7 [3.06]	65,0 [2.60]	15,9 [0.63]	30,0 [1.18]	92,0 [3.6]	5,6 [0.22]	73,0 [2.88]	98,4-108,7 [3.88-4.28]	4,8 [0.19]
964712		16,0 [0.63]	40,0 [1.57]	80,0 [3.15]	5,0 [0.2]	90,0-108,7 [3.54-4.28]	92,0 [3.6]	7,1 [0.28]	77,0 [3.06]	65,0 [2.6]	16,0 [0.63]	40,0 [1.57]	92,0 [3.6]	7,0 [0.28]	70,0 [2.76]	90,0-109,0 [3.54-4.29]	5,0 [0.20]
964715		16,0 [0.63]	40,0 [1.57]	80,0 [3.15]	5,0 [0.20]	90,0-108,7 [3.54-4.28]	92,0 [3.6]	7,1 [0.28]	77,7 [3.06]	65,0 [2.60]	16,0 [0.63]	40,0 [1.58]	92,0 [3.6]	7,0 [0.28]	80,0 [3.15]	100,0-108,7 [3.94-4.28]	5,0 [0.20]
964719		19,1 [0.75]	40,7 [1.60]	73,0 [2.88]	5,0 [0.20]	90,0-108,7 [3.54-4.28]	92,0 [3.6]	7,1 [0.28]	77,7 [3.06]	65,0 [2.60]	16,0 [0.63]	40,0 [1.58]	92,0 [3.6]	7,0 [0.28]	70,0 [2.76]	90,0-108,7 [3.54-4.28]	5,0 [0.20]
SIZE 4																	
964824		14,0 [0.55]	55.5 [2.19]	80,0 [3.15]	3,5 [0.14]	115,0-150,0 [4.53-5.90]	125,0 [4.9]	10,0 [0.39]	105,7 [4.16]	82,0 [3.20]	14,0 [0.55]	30,0 [1.20]	125,0 [4.9]	10,0 [0.39]	80,0 [3.10]	115,0-150,0 [4.53-5.90]	5,0 [0.20]
964819 [3]		19,0 [0.75]	59,1 [2.33]	110,0 [4.33]	3,5 [0.14]	125,72-150,0 [4.95-5.90]	125,0 [4.9]	10,0 [0.39]	106,5 [4.19]	82,0 [3.2]	19,0 [0.75]	50,0 [1.97]	125,0 [4.9]	10,0 [0.39]	110,0 [4.33]	130,0-150,0 [5.12-5.90]	6,0 [0.24]
964814		19,0 [0.75]	59,1 [2.33]	110,0 [4.33]	3,5 [0.14]	125,7-150,0 [4.95-5.90]	125,0 [4.9]	10,0 [0.39]	106,5 [4.19]	82,0 [3.2]	19,0 0.75]	50,0 [1.97]	125,0 [4.9]	10,0 [0.39]	110,0 [4.33]	130,0-150,0 [5.12-5.90]	6,0 [0.24]
964823		19,0 [0.75]	55,5 [2.19]	95,0 [3.74]	3,5 [0.14]	115,0-150,0 [4.53-5.90]	125,0 [4.9]	10,0 [0.39]	105,7 [4.16]	82,0 [3.20]	19,0 [0.75]	40,0 [1.58]	125,0 [4.9]	10,0 [0.39]	96,0 [3.78]	115,0-150,0 [4.53-5.90]	6,0 [0.24]

1. Holding Torque: 6 Nm [55 in-lb], Release Pressure: 4,3 bar [62 psi] 2. Bore with 5,0 mm [0.2 in] Keyway 3. Holding Torque: 14 Nm [125 in-lb], Release Pressure: 3,4 bar [50 psi] 4. Bore with 8 mm [0.31 in] Keyway

SERVO MOTOR BRAKES *Models 2, 3, 4, 5*

DIMENSIONS MM [IN]

PRODUCT NUMBER	NEMA SIZES	BORE DIA. (A)	MAX SHAFT INSERT (B)	MAX PILOT (C)	PILOT DEPTH (D)	MIN - MAX BCD (E – F)	FLANGE (G)	TAP/ SLOT (H)	LENGTH (J)	QUICK EXHAUST (K)	SHAFT DIA. (L)	SHAFT LENGTH (M)	FLANGE (N)	BOLT SLOT OR TAPPED HOLE (P)	PILOT (Q)	MIN - MAX BC (R - S)	KEYWAY (T)
SIZE 4 continued																	
964818		19,0 [0.75]	95,0 [3.74]	96,0 [3.78]	3,5 [0.14]	115,0-150,0 [4.53-5.90]	125,0 [4.9]	10,0 [0.39]	105,7 [4.16]	82,0 [3.2]	19,0 [0.75]	40,0 [1.57]	125,0 [4.9]	10,0 [0.39]	95,0 [3.74]	115,0-150,0 [4.53-5.90]	6,0 [0.24]
964816	143/145 TC OUTPUT	19,0 [0.75]	42,9 [1.69]	95,0 [3.74]	3,0 [0.12]	125,72-150,0 [4.95-5.90]	125,0 [4.9]	10,0 [0.39]	104,0 [4.09]	82,0 [4.6]	22,2 [0.875]	54,0 [2.13]	125,0 [4.9]	3/8 - 16	114,3 [4.50]	149,2-150,0 [5.875-5.90]	4,80 [0.189]
964826		15.9 [0.63]	56.3 [2.22]	114.3 [4.50]	3.5 [0.14]	149.2 [5.88]	125.0 [4.9]	10.3 [0.41]	106.5 [4.19]	82.0 [3.20]	19.0 [0.75]	40.0 [1.58]	125,0 [4.9]	10.0 [0.39]	110.0 [4.33]	130.0-150.0 [5.12-5.90]	6.0 [0.24]
964817		24,0 [0.94	55,5 [2.19]	110,0 [4.33]	3,5 [0.14]	126,0-150,0 [4.95-5.90]	125,0 [4.9]	10,0 [0.39]	106,5 [4.19]	82,0 [3.2]	24,0 [0.94]	50,0 [1.97]	125,0 [4.9]	10,0 [0.39]	110,0 [4.33]	130,0-150,0 [5.12-..90]	8,0 [0.31]
964815	143/145 TC OUTPUT	24,0 [0.94]	55,9 [2.20]	110,0 [4.33]	4,0 [0.16]	150,0-186,3 [5.9-7.33]	125,0 [4.9]	12,0 [0.47]	105,0 [4.13]	82,0 [3.2]	22,2 [0.88]	53,97 [2.12]	125,0 [4.9]	3/8 - 16	114,3 [4.50]	149,2-150,0 [5.875-5.90]	4,80 [0.189]
964820		22,0 [0.866]	59,1 [2.33]	110,0 [4.33]	3,5 [0.14]	126,0-150,0 [4.96-5.91]	125,0 [4.9]	10,0 [0.39]	105,6 [4.16]	82,0 [3.2]	15,9 [0.625]	52,4 [2.063]	125,0 [4.9]	3/8 - 16	114,3 [4.500]	149,2 [5.875]	4,80 [0.189]
964821		22,0 [0.866]	67,1 [2.64]	110,0 [4.33]	3,5 [0.14]	126,0-150,0 [4.96-5.91]	125,0 [4.9]	10,0 [0.39]	99,2 [3.91]	82,0 [3.2]	22,0 [0.866]	50,0 [1.97]	125,0 [4.9]	10,0 [0.39]	110,0 [4.33]	130,0-150,0 [5.12-5.90]	6,0 [0.24]
964830		24,0 [0.95]	54,7 [2.15]	95,0 [3.74]	3,5 [0.14]	115,0-150,0 [4.53-5.90]	125,0 [4.9]	10,0 [0.39]	105,7 [4.16]	82,0 [3.20]	24,0 [0.95]	45,0 [1.77]	125,0 [4.9]	7,0 [0.28]	95,0 [3.74]	115,0-149,9 [4.53-5.90]	8,0 [0.32]
964825		24,0 [0.95]	54,7 [2.15]	95,0 [3.74]	3,5 [0.14]	115,0-150,0 [4.53-5.90]	125,0 [4.9]	10,0 [0.39]	105,7 [4.16]	82,0 [3.20]	24,0 [0.95]	50,0 [1.97]	125,0 [4.9]	10,0 [0.39]	95,0 [3.74]	115,0-149,9 [4.53-5.90]	8,0 [0.32]
964829		24.0 [0.95]	55,5 [2.19]	110.0 [4.33]	3.5 [0.14]	126,0-150.0 [4.95-5.90]	125.0 [4.9]	10.0 [0.39]	106.5 [4.19]	82.0 [3.20]	24.0 [0.95]	50.0 [1.97]	125,0 [4.9]	10.0 [0.39]	110.0 [4.33]	130.0-150.0 [5.12-5.90]	8.0 [0.32]
SIZE 5																	
964907		24,0 [0.94]	58,2 [2.29]	131,0 [5.16]	6,2 [0.24]	150,0-186,0 [5.9-7.3]	150,4 [5.92]	12,0 [0.47]	132,5 [5.22]	95,0 [3.7]	24,0 [0.945]	50,0 [1.97]	150,0 [5.9]	12,0 [0.47]	130,0 [5.12]	165,0-186,3 [6.5-7.33]	8,0 [0.31]
964906		32,0 [1.26]	65,7 [2.59]	130,0 [5.12]	4,0 [0.16]	215,0 [8.46]	150,4 [5.92]	15,0 [0.59]	140,5 [5.53]	95,0 [3.7]	22,2 [0.875]	54,0 [2.125]	150,0 [5.9]	3/8 -16	114,3 [4.50]	149,2 [5.875]	4,80 [0.189]
964908		24,0 [0.95]	58,2 [2.29]	131,0 [5.16]	6,15 [0.24]	150,0-186,3 [5.91-7.33]	150,4 [5.92]	12,0 [0.47]	132,5 [5.22]	95,0 [3.70]	24,0 [0.95]	50,0 [1.97]	150,0 [5.9]	12,0 [0.47]	130,0 [5.12]	165,0-186,3 [6.50-7.33]	8,0 [0.32]
964909		24,0 [0.94]	58,2 [2.29]	110,0 [4.33]	6,2 [0.24]	150,0-186,0 [5.9-7.3]	150,4 [5.92]	12,0 [0.47]	132,5 [5.22]	95,0 [3.7]	24,0 [0.945]	50,0 [1.97]	150,0 [5.9]	12,0 [0.47]	110,0 [4.33]	165,0-186,3 [6.5-7.33]	8,0 [0.31]
964912 [4]		24,0 [0.94]	66,7 [2.63]	131,0 [5.16]	6,2 [0.24]	150,0-186,0 [5.9-7.3]	150,4 [5.92]	12,0 [0.47]	132,5 [5.22]	95,0 [3.7]	24,0 [0.945]	50,0 [1.97]	150,0 [5.9]	12,0 [0.47]	131,0 [5.16]	165,0-186,3 [6.5-7.33]	8,0 [0.31]
964913		24.0 [0.95]	58,2 [2.29]	110.0 [4.33]	6.15 [0.24]	150.0-186.3 [5.91-7.33]	150.4 [5.92]	12.0 [0.47]	132.5 [5.22]	95.0 [3.70]	24.0 [0.95]	50.0 [1.97]	150,0 [5.9]	12.0 [0.47]	110.0 [4.33]	165.0-186.3 [6.50-7.33]	8.0 [0.32]
964915		28,0 [1.10]	66,7 [2.63]	131,0 [5.16]	6,2 [0.24]	150,0-186,3 [5.91-7.33]	150,4 [5.92]	12,0 [0.47]	132,5 [5.22]	95,0 [3.70]	28,0 [1.10]	60,0 [2.36]	150,0 [5.9]	12,0 [0.47]	130,0 [5.12]	165,0-186,3 [6.50-7.33]	8,0 [0.32]

1. Holding Torque: 6 Nm [55 in-lb], Release Pressure: 4,3 bar [62 psi] 2. Bore with 5,0 mm [0.2 in] Keyway 3. Holding Torque: 14 Nm [125 in-lb], Release Pressure: 3,4 bar [50 psi] 4. Bore with 0,31 mm [8.0 in] Keyway

SPECIFICATIONS

SIZE	MIN HOLDING TORQUE	MAX RPM	ENGAGE (ON) TIME, Ms	RELEASE (OFF) TIME, Ms	TORSIONAL RIGIDITY	INERTIA Kg. m^2 [lb. ft^2]	OVERHUNG LOAD	WEIGHT
2	2.25 Nm [20 in-lb]	10,000	8	92	6180 Nm/rad [4550 lb-ft/rad]	0,00002 [0.0005]	833 N [190 lbs]	1.1 kg [2.4 lbs]
3	8 Nm [70 in-lb]	10,000	12	75	6613 Nm/rad [7090 lb-ft/rad]	0,00005 [0.0012]	1070 N [240 lbs]	1.5 kg [3.2 lbs]
4	22 Nm [200 in-lb]	10,000	50	80	2381 Nm/rad [17550 lb-ft/rad]	0,00031 [0.0074]	2334 N [525 lbs]	3.0 kg [8.5 lbs]
5	45 Nm [400 in-lb]	10,000	60	100	22562 Nm/rad [16640 lb-ft/rad]	0,00114 [0.0271]	2447 N [550 lbs]	6.3 kg [13.8 lbs]

1/8 NPT quick exhaust .03 orifice, 3-way valve

SERVO MOTOR BRAKES *Models 7, 9, 11*

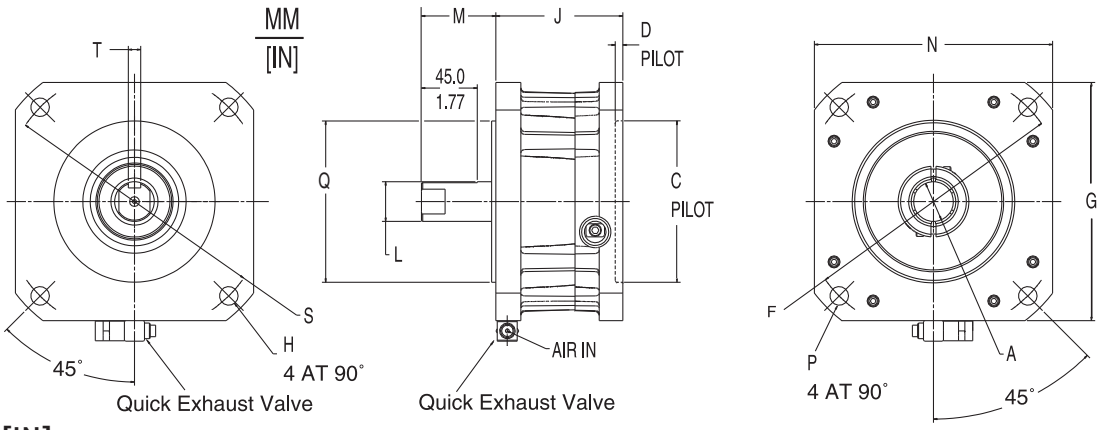

DIMENSIONS MM [IN]

PRODUCT NUMBER	BORE DIA. (A)	PILOT (C)	PILOT DEPTH (D)	BOLT CIRCLE (F)	FLANGE (G)	BOLT HOLE (H)	LENGTH (J)	SHAFT DIA. (L)	SHAFT LENGTH (M)	FLANGE (N)	BOLT HOLE (P)	PILOT (Q)	BOLT CIRCLE (S)	KEYWAY (T)
SIZE 7														
965004	32,0 [1.26]	130,0 [5.12]	6,1 [0.24]	215,0 [8.46]	192,0 [7.56]	15,0 [0.59]	102,3 [4.03]	32,0 [1.26]	60,0 [2.36]	192,0 [7.56]	15,0 [0.59]	130,0 [5.12]	215,0 [8.47]	10.0 [0.39]
965008	24,0 [0.95]	130,0 [5.12]	6,1 [0.24]	165,0 [6.50]	192,0 [7.56]	M10	102,3 [4.03]	24,0 [0.95]	50,0 [1.97]	192,0 [7.56]	12,0 [0.47]	130,0 [5.12]	80,0 [7.10]	8,0 [0.32
965010	32,0 [1.26]	130,0 [5.12]	6,1 [0.24]	165,0 [6.50]	192,0 [7.56]	M10	102,3 [4.03]	32,0 [1.26]	60,0 [2.36]	192,0 [7.56]	15,0 [0.59]	130,0 [5.12]	215,0 [8.47]	10.0 [0.39]
965000	32,0 [1.26]	130,0 [5.12]	6,1 [0.24]	215,0 [8.46]	192,0 [7.56]	15,0 [.591]	102,3 [4.03]	32,0 [1.26]	60,0 [2.36]	192,0 [7.56]	15,0 [.591]	130,0 [5.12]	215,0 [8.46]	10,0 [0.39]
965001	32,0 [1.26]	180,0 [7.09]	6,1 [0.24]	215,0 [8.46]	192,0 [7.56]	15,0 [.591]	102,3 [4.03]	32,0 [1.26]	60,0 [2.36]	192,0 [7.56]	15,0 [.591]	180,0 [7.09]	215,0 [8.46]	10,0 [0.39]
965006 ①	32,0 [1.26]	180,0 [7.09]	6,1 [0.24]	215,0 [8.46]	192,0 [7.56]	15,0 [.591]	102,3 [4.03]	32,0 [1.26]	60,0 [2.36]	192,0 [7.56]	15,0 [.591]	180,0 [7.09]	215,0 [8.46]	10,0 [.394]
965007	32,0 [1.26]	180,0 [7.09]	6,1 [0.24]	215,0 [8.46]	228,6 [9.00]	15,0 [0.59]	102,3 [4.03]	34,9 [1.38]	85,6 [3.37]	192,0 [7.56]	12,7 [0.50]	215,9 [8.50]	184,2 [7.25]	8,0 [0.31]
965003	35,0 [1.38]	114,3 [4.50]	6,1 [0.24]	200,0 [7.87]	174,0 [6.85]	M12 x1.75	102,3 [4.03]	35,0 [1.38]	79,0 [3.11]	192,0 [0.53]	13,5 [4.50]	114,3 [7.87]	200,0 [0.39]	10,0 [0.39]
965005	35,0 [1.38]	114,3 [4.50]	6,1 [0.24]	200,0 [7.874]	174,0 [6.85]	12,0 [0.47]	102,3 [4.03]	35,0 [1.38]	79,0 [3.11]	174,0 [6.85]	M12 [0.47]	114,3 [4.50]	200,0 [7.874]	10,0 [0.39]
965002	35,0 [1.38]	114,3 [4.50]	6,1 [0.24]	200,0 [7.87]	192,0 [7.56]	13,0 [0.51]	102,3 [4.03]	35,0 [1.38]	80,0 [3.15]	192,0 [7.56]	13,0 [0.51]	114,3 [4.50]	200,0 [7.87]	10,0 [0.39]
965009	42,0 [1.85]	114,1 [4.49]	5,0 [0.20]	200,0 [7.87]	174,0 [6.85]	12,8 [0.50]	128,2 [5.05]	35,0 [1.38]	79,0 [3.11]	174,0 [6.85]	12,5 [0.53]	114,3 [4.50]	200,0 [7.87]	10,0 [0.39]
SIZE 9														
965102	38,0 [1.50]	180,0 [7.09]	4,1 [0.16]	215,0 [8.47]	214,0 [8.43]	13,0 [0.51]	102,3 [4.03]	38,0 [1.50]	60,0 [2.36]	214,0 [8.43]	13,0 [0.51]	180,0 [7.09]	215,0 [8.47]	12,0 [0.47]
965101	38,0 [1.50]	180,0 [7.09]	4,1 [0.16]	215,0 [8.46]	214,0 [8.43]	M12 [0.47]	102,3 [4.03]	34,9 [1.375]	60,0 [2.36]	214,0 [8.43]	M12 [0.47]	180,0 [7.09]	215,0 [8.46]	no key
965100	38,0 [1.50]	180,0 [7.09]	4,1 [0.16]	215,0 [8.46]	214,0 [8.43]	13,0 [.512]	102,3 [4.03]	38,0 [1.50]	60,0 [2.36]	214,0 [8.43]	13,0 [.512]	180,0 [7.09]	215,0 [8.46]	12,0 [.472]
965105	42,0 [1.65]	200,0 [7.87]	5,0 [0.20]	235,0 [9.25]	220,0 [8.66]	13,5 [0.53]	102,3 [4.03]	42,0 [1.65]	116,0 [4.57]	214,0 [8.43]	13,5 [0.53]	200,0 [7.87]	235,0 [9.25]	12.0 [0.47]
SIZE 11														
965200	48,0 [1.89]	250,0 [9.84]	9,4 [.37]	300,0 [11.81]	265,0 [10.43]	15,0 [.591]	123,3 [4.85]	48,0 [1.89]	60,0 [2.36]	265,0 [10.43]	15,0 [.591]	250,0 [9.84]	300,0 [11.81]	14,0 [0.55]
965201	35,0 [1.38]	230,0 [9.06]	9,1 [0.36]	265,0 [10.43]	262,9 [10.35]	M12 x1.75	123,3 [4.85]	35,0 [1.38]	92,0 [3.62]	265,0 [10.43]	14,0 [0.55]	230,0 [9.06]	265,0 [10.43]	no key

① Holding Torque: 99 Nm [880 in-lb], Release Pressure: 4,4 bar [64 psi]

SERVO MOTOR BRAKES *Models 7, 9, 11*

SPECIFICATIONS MM [IN]

SIZE	MIN HOLDING TORQUE	MAX RPM	TORSIONAL RIGIDITY	INERTIA Kg. m² [lb. ft²]	WEIGHT
7	125 Nm [1,100 in-lb]	5,000	54,772 Nm/rad [40,390 lb-ft/rad]	0,00344 [0.0816]	13,6 kg [30 lbs]
9	125 Nm [1,100 in-lb]	5,000	102,733 Nm/rad [75,757 lb-ft/rad]	0,00344 [0.0816]	16,1 kg [35.5 lbs]
11	125 Nm [1,100 in-lb]	5,000	211,695 Nm/rad [156,108 lb-ft/rad]	0,00344 [0.0816]	28,5 kg [63 lbs]

LINEAR STAGE AND LINEAR MOTION BRAKES

ECLIPSE™ LINEAR STAGE BRAKE

NEMA 23 sizes (NEMA 34 and 42 sizes available on request)

Designed with ease of installation, precision and security in mind, the Nexen Stage Brake provides simple mounting procedures that permit both vertical and horizontal holding for installation on the non-driven end of ball screw stages. This type of installation reduces the risks associated with motor shaft/coupling failure. A true zero backlash brake, it also allows high lead on ball screw stages with-out fear of back-drive.

SPECIFICATIONS

Nexen Product Number	Size Shaft "A"	USED IN: Thompson Super Slide™, Powerslide™ and Ball Screw Assembly
964630	0.1875 in	2DB08
964631	0.25 in	2AB08, 2CB08, 2CB12, 2DB12, 2EB08, 2BSA08, BSDAM12
964632	0.375 in	2AB12, 2EB12, BSA12, BSAM20
964633	8 mm	2HBM10, 2RBM12
964634	10 mm	2NBM20, 2RBM16
964635	12 mm	2HEM10, 2NEM20, 2REM12, 2REM16

- Emergency holding and stopping for increased safety
- Designed for vertical and horizontal applications
- Simple pneumatic valve for easy installation
- Zero backlash allows for precision holding
- 2.25 Nm [20 in-lb] of torque
- Economical

DIMENSIONS MM [IN]

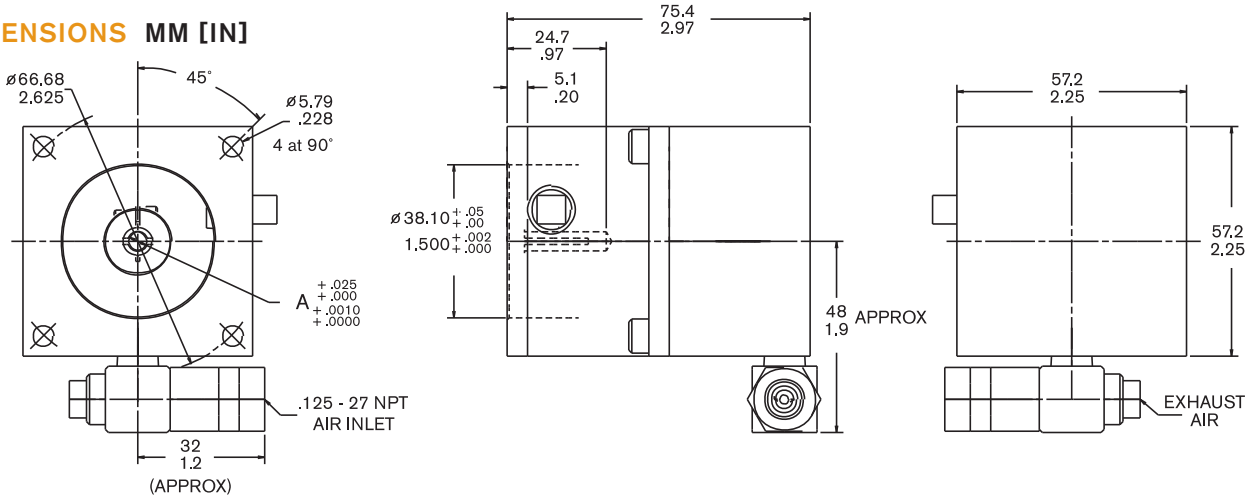

SPRING-SET MOTOR BRAKES *For 1 to 20 HP NEMA TC Flange Motors*

ECLIPSE™ SPRING-SET MOTOR BRAKE

For 1 to 20 HP NEMA Flange Motors

The Nexen flange mounted Eclipse Spring-Set Motor Brake is designed for use with 1–20 HP NEMA C-faced motors. This power-off brake is ideal for use in cycling, emergency stopping and holding applications. Low wear rate on the friction material combined with high thermal capabilities make this Motor Brake ideal for dynamic stopping applications. All Nexen spring-set pneumatic brakes run cooler and last longer than electrical spring-set brakes. Replace your double shafted brake motor with a standard motor and a Nexen Spring-Set Motor brake for off-the-shelf availability.

NEMA TC Flange Motor Brake

- Spring-set, air-released brake for holding applications
- Power-off brakes for emergency and dynamic stopping functions
- Fits 1 to 20 Horsepower NEMA TC flange motors
- High torque capacity
- Operating speed up to 5000 rpm
- Continuous thermal horsepower up to 0.30 HP_t [0,22 kW]
- Low inertia rotor/shaft
- Easy to install, completely assembled
- Vertical or horizontal mounting configuration
- Totally enclosed
- Exterior finish: black paint

NEMA MOTOR/FRAME SELECTION CHART

Use this chart as specification and operational criteria for your application.

HP of Motor	RPM	Frame Number	Motor Shaft in[mm]	Clutch Brake Model Number
1	900	182TC	1.125 [28,58]	EMB 1125
1½	1200	182TC	1.125 [28,58]	EMB 1125
1½	900	184TC	1.125 [28,58]	EMB 1125
2	1200	184TC	1.125 [28,58]	EMB 1125
2	900	213TC	1.375 [34,93]	EMB 1375
3	1800	182TC	1.125 [28,58]	EMB 1125
3	1200	213TC	1.375 [34,93]	EMB 1375
3	900	215TC	1.375 [34,93]	EMB 1375
5	1800	184TC	1.125 [28,58]	EMB 1125
5	1200	215TC	1.375 [34,93]	EMB 1375
7½	1800	213TC	1.375 [34,93]	EMB 1375
10	1800	215TC	1.375 [34,93]	EMB 1375
15	1800	254TC	1.625 [41,28]	EMB 1625
20	1800	254TC	1.625 [41,28]	EMB 1625

SPRING-SET MOTOR BRAKES *For 1 to 20 HP NEMA TC Flange Motors*

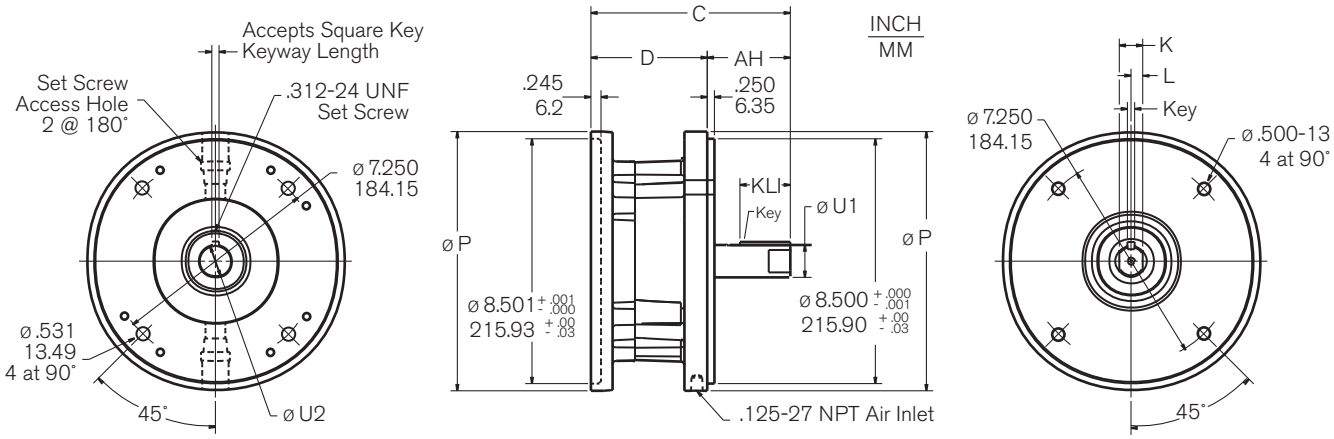

DIMENSIONS IN [MM]

MODEL	SQUARE KEY	KEYWAY LENGTH	BORE U2 + .000 - .001 + .03 - .00	P	D	C	AH	KLI	U1 + .000 - .001 + .03 - .00	K	L
EMB 1125	0.250 [6.35]	1.875 [47.50]	1.126 [28.60]	9.00 [228.6]	4.038 [102.58]	6.924 [175.87]	2.885 [73.29]	1.750 [44.45]	1.125 [28.57]	0.81 [20.6]	0.41 [10.3]
EMB 1375	0.312 [7.94]	2.500 [63.50]	1.376 [34.95]	9.00 [228.6]	4.038 [102.58]	7.408 [188.15]	3.369 [85.58]	2.250 [57.15]	1.375 [34.93]	0.98 [25.0]	0.49 [12.5]
EMB 1625	0.375 [9.53]	3.000 [76.20]	1.626 [41.30]	10.00 [254.0]	4.638 [117.82]	8.639 [219.43]	4.000 [101.61]	3.000 [76.20]	1.625 [41.27]	1.21 [30.7]	0.61 [15.5]

SPECIFICATIONS IN [MM]

MODEL	PRODUCT NUMBER	NEMA MOTOR FRAME	MIN HOLDING TORQUE ②	HP_T TO UP	INERTIA/COUPLING Kg. $m^2 \times 10^{-4}$ [lb. in. $s^2 \times 10^{-3}$]	MAX RPM	MIN DISENGAGEMENT AIR PRESSURE	SHIPPING WEIGHT
EMB 1125	965300	182/184	55 ft-lb [75 Nm]	.30	39,0 [34.5]	5000	48 psi [3,3 bar]	36 lbs [16 kg]
EMB 1375	965310	213/215	73 ft-lb [100 Nm]	.30	39,0 [34.5]	5000	64 psi [4,4 bar]	37 lbs [17 kg]
EMB 1625	965320	254/256①	92 ft-lb [125 Nm]	.30	44,0 [38.9]	5000	80 psi [5,5 bar]	50 lbs [23 kg]

① Consult factory for 20 HP applications. HP_T = Continuous Thermal HP ② For other than specified holding torque, contact Nexen.

3-way Air Control - Normally Closed

VOLTS	INLINE MOUNT PRODUCT NO.	AIR INLET MOUNT PRODUCT NO.	OPERATING RANGE (PSI [BAR])	EFFECTIVE ORIFICE (IN [MM])	PORT SIZE (NPT)	POWER CONSUMPTION (WATTS)
24 VDC	948805	948808	0-150 [0-10,3]	0.0468 [1,189]	0.125	6
90 VDC	948806	948809	0-150 [0-10,3]	0.0468 [1,189]	0.125	6
120 VAC	948802	948804	0-150 [0-10,3]	0.0468 [1,189]	0.125	6
240 VAC	948807	948810	0-150 [0-10,3]	0.0468 [1,189]	0.125	6

SPRING-SET MOTOR BRAKES *For 0,37 to 7,5 kW IEC B5 Flange Motors*

ECLIPSE™ SPRING-SET MOTOR BRAKE

For 0,37 to 7,5 kW IEC B5 Flange Motors

The Nexen flange mounted Eclipse Spring-Set Motor Brake is designed for use with 0,37 – 7,5 kW IEC B5 faced motors. This power-off brake is ideal for use in cycling, emergency stopping and holding applications. Low wear rate on the friction material combined with high thermal capabilities make this Motor Brake ideal for dynamic stopping applications. All Nexen spring-set pneumatic brakes run cooler and last longer than electrical spring-set brakes. Replace your double shafted brake motor with a standard motor and a Nexen Spring-Set Motor brake for off-the-shelf availability.

IEC B5 Flange Motor Brake

- Simple installation with split hub and shaft collar
- Spring-set, air-released brake for holding applications
- Power-off brakes for emergency and dynamic stopping functions
- Fits 0,37 to 7,5 kilowatt IEC B5 flange motors
- High torque capacity
- Operating speed up to 5000 rpm
- Continuous thermal horsepower up to 0,22 kW {0.30 HP_t]
- Low inertia rotor/shaft
- Easy to install, completely assembled
- Vertical or horizontal mounting configuration
- Totally enclosed
- Exterior finish: black paint

IEC MOTOR/FRAME SELECTION CHART

Use this chart as specification and operational criteria for your application.

kW of Motor	RPM	Frame Number	Motor Shaft (mm)	Brake Model Number
0,37	1000	80	19	EMB 130-19
0,55	1000, 1500	80	19	EMB 130-19
0,75	1000	90S	24	EMB 130-24
0,75	1500, 3000	80	19	EMB 130-19
1,1	1000	90L	24	EMB 130-24
1,1	1500	90S	24	EMB 130-24
1,5	1500, 3000	90L, 90S	24	EMB 130-24
1,5	1000	100L	28	EMB 180-28
2,2	1000	112M	28	EMB 180-28
2,2	1500, 3000	100L, 90L	28	EMB 180-28
3,0	1000	132S	38	EMB 230-38
3,0	1500, 3000	100L	28	EMB 180-28
4,0	1500, 3000	112M	28	EMB 180-28
5,5	1500, 3000	132S	38	EMB 230-38
4,0	1000	132M	38	EMB 230-38
5,5	1000	132M	38	EMB 230-38
7,5	1500, 3000	132M, 132S	38	EMB 230-38

SPRING-SET MOTOR BRAKES *For 0,37 to 7,5 kW IEC B5 Flange Motors*

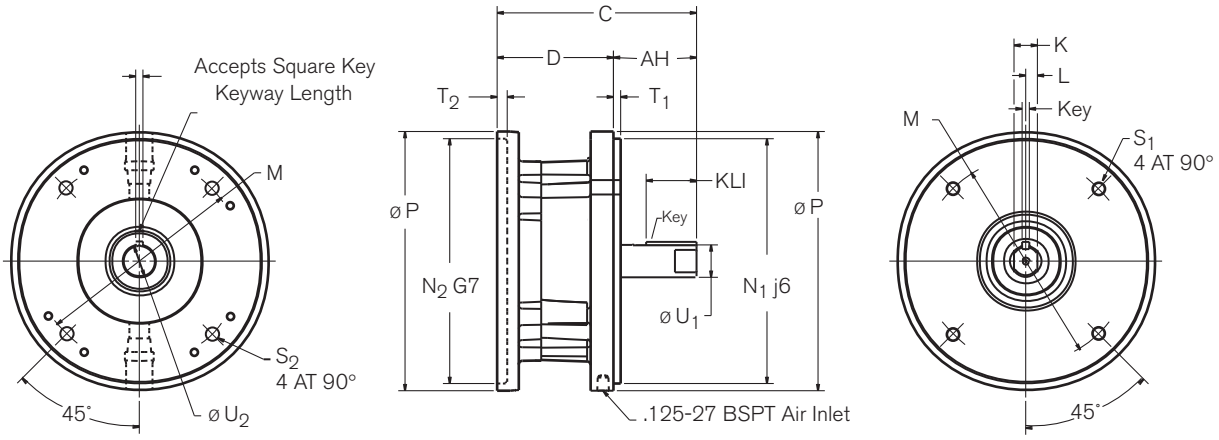

DIMENSIONS MM

MODEL	KEY	AH	C	D	M	N_1	N_2	P	S_1	S_2	T_1	T_2	U_1	U_2	KL1	K	L
EMB 130-19	6	40	185	145	165	130	130	200	12	M10	3,5	5	19	19	33	14	7
EMB 130-24	8	50	195	145	165	130	130	200	12SLOT	12SLOT	3,5	5	24	24	35	18	9
EMB 180-28	8	60	163	103	215	180	180	250	M8	9	6,4	6,2	28	28	45	20	10
EMB 230-38	10	80	185	105	265	230	230	300	15	M14	4,0	4,4	38	38	51	25	12,5

Tolerances / Subscript "1" = j6 "2" = G7

SPECIFICATIONS MM

MODEL	PRODUCT NUMBER	IEC B5 MOTOR FRAME	MIN HOLDING TORQUE	kW THERMAL DISSIPATION TO UP	INERTIA/COUPLING Kg. $m^2 \times 10^{-4}$ [lb. in. $s^2 \times 10^{-3}$]	MAX RPM	MIN DISENGAGEMENT AIR PRESSURE	SHIPPING WEIGHT
EMB 130-19	964910	80	45 Nm	0,22	14,0 [12.4]	10000	5,5 bar	7 kg
EMB 130-24	964911	90L, 90S	45 Nm	0,22	14,0 [12.4]	10000	5,5 bar	7 kg
EMB 180-28	965301	100L, 112M	100 Nm	0,22	39,0 [34.5]	5000	4,4 bar	17 kg
EMB 230-38	965303	132M	125 Nm	0,22	44,0 [38.9]	5000	5,5 bar	23 kg

Consult factory for 11 kW applications. For other than specified holding torque, contact Nexen.

MICRO FRICTION BRAKE

The Micro Friction Clutch and a Flange Adapter combine to form a brake assembly which provides:

- Maximum Operating Speed up to 3600 rpm
- Thermal Horsepower rating of 0.06 at 3600 rpm
- Static Torque capacity up to 18 In. Lbs. @ 80 psi
- Heat Sink capacity of 1900 Ft. Lbs.
- 0.375 inch **Standard Bore**
- 5 inch hose assembly with 0.125 NPT included

The Brake and Flange Adapter must be ordered separately. Use the slot in the Flange Adapter to anchor the pilot.

Micro Friction Brake

Component	Product Number	Bore (In)	Shipping Wt. (Lbs)
Micro Clutch	856800	0.375	3
Flange Adapter	856700	--	1

Set Screw for shaft included.
Required shaft insertion into clutch hub = minimum of 1 inch. From flange adapter end.

MICRO MODEL - APPROXIMATE DIMENSIONS (INCHES)

Pilot Mount

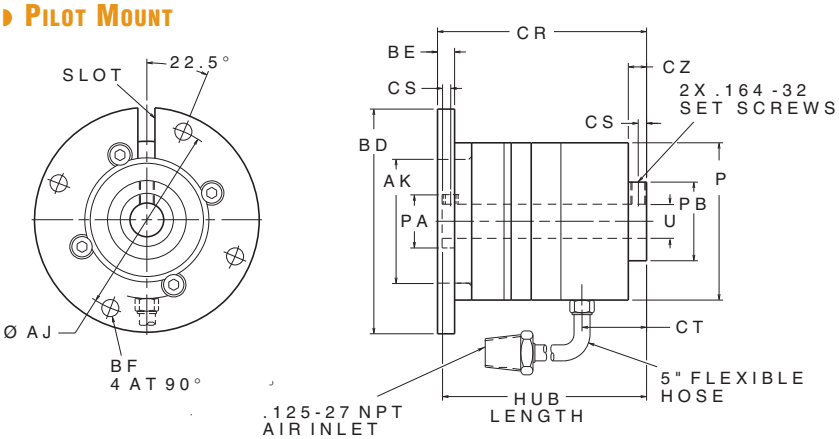

PRODUCT NUMBER	AJ	AK ±.002	BD	BE	BF	CR	CS	CT	CZ	P	PA	PB	U +.001 -.000
856800	2.125	1.382	2.50	0.19	0.190	2.33	0.09	0.72	0.20	1.75	0.59	0.88	0.375

PRODUCT NUMBER	HUB LENGTH	SLOT WD	SLOT DP
856800	2.27	0.19	0.38

Torque Vs. Air Pressure

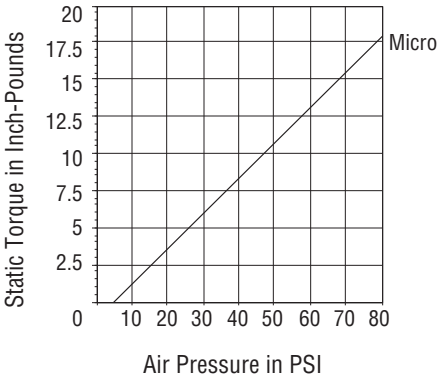

NOTE: Dynamic torque is approximately 85% of static torque.

BW Model Brakes

Component	Product Number	Bore (In)	Key Size (SQ)	Shipping Wt. (Lbs)
BW Clutch	800111	0.500	0.125	4
BW Clutch	800100	0.625	0.188	4
B-275 Clutch	802871	0.500	0.125	4
B-275 Clutch	802870	0.625	0.188	4
Flange Adapter	801200	--	--	1

Keys are included.
Required shaft insertion into clutch hub = minimum of 1.50 inches from Pilot side.

Torque Vs. Air Pressure

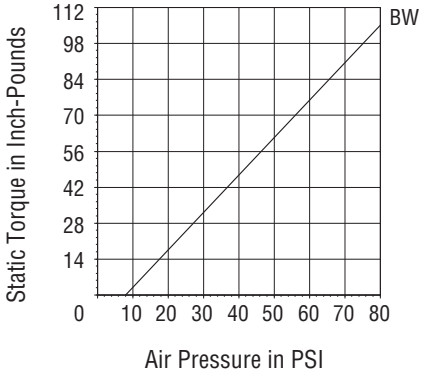

NOTE: Dynamic torque is approximately 85% of static torque.

BW MODEL BRAKES - APPROXIMATE DIMENSIONS (INCHES)

Pilot Mount

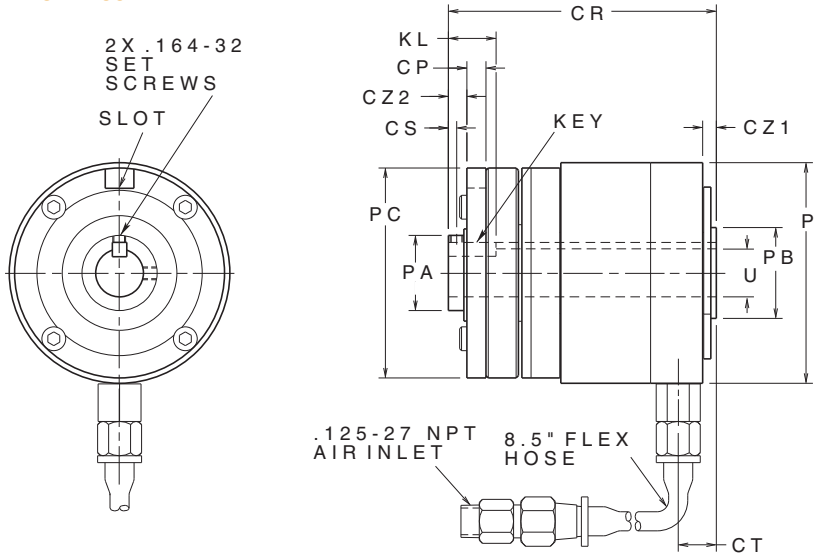

PRODUCT NUMBER	CP	CR	CS	CT	CZ1	CZ2	KL	P	PB	PC	U +.001 -.000	KEY (SQ)	SLOT WD	SLOT DP	PA
800100	0.25	3.51	0.11	0.50	0.18	0.24	0.62	2.89	1.19	2.75	0.625	0.188	0.375	0.250	.984
800111	0.25	3.51	0.11	0.50	0.18	0.24	0.62	2.89	1.19	2.75	0.500	0.125	0.375	0.250	.984

BANTAM WEIGHT MODEL BW FRICTION BRAKE

The BW Friction Brake and Flange Adapter combine to form a brake assembly which provides:

- Maximum Operating Speed up to 3600 rpm
- Thermal Horsepower rating of 0.13 @ 3600 rpm
- Static Torque capacity up to 100 In. Lbs. @ 80 psi
- Heat Sink capacity of 5,650 Ft. Lbs.
- **Standard Bore** sizes of 0.500 and 0.625 inches
- 8.5 inch hose included .

The Brake and Flange Adapter must be ordered separately. Use the slot in the Flange Adapter to anchor the pilot.

- BW is equipped with sealed, radial bearings and a single key splined hub.
- B-275 is equipped with sealed, radial bearings and a multitooth splined hub.

STRAIGHT BORE FRICTION BRAKES MODELS S-450, S-600 & S-800

- Static Torque capacity up to:
  S-450/440 In. Lbs. @ 80 psi
  S-600/840 In. Lbs. @ 80 psi
  S-800/1600 In. Lbs. @ 80 psi
- Maximum Operating Speed up to 1800 rpm
- Thermal Horsepower rating of:
  S-450/0.515 @ 1800 rpm
  S-600/1.300 @ 1800 rpm
  S-800/2.230 @ 1800 rpm
- Heat Sink capacity of:
  S-450/30,000 Ft. Lbs.
  S-600/60,000 Ft. Lbs.
  S-800/125,000 Ft. Lbs.
- Standard or Low Coefficient Facings

These self-adjusting air cooled brakes mount easily and come with:

- **Standard Bore Sizes:**
  S-450/1.125 inches
  S-600/1.375 inches
  S-800/1.938 inches
- Split friction facings for easy replacement without brake removal or disassembly
- Thru-shaft design can be **flange mounted** or **shaft mounted** with a torque pin

Options and Accessories include:

- **Bushings** That allow you to customize the bore to your shaft diameter
  S-450/4 Sizes
  S-600/7 Sizes
  S-800/7 Sizes
- Torque Pin Bracket allows you to anchor the housing
- Brake Safety Guard for protection

S-450, S-600 & S-800 Model Straight Bore Friction Brakes①

Model	Brake	Product Number	Max. Bore with Standard Keyseat (In)	Inertia In (Lb.In²)	Key Size (SQ)	Shipping Wt. (Lbs)
S-450	Standard Facing	827800	1.125	4.74	0.250	14
S-450	Low Coefficient Facing	827801	1.125	4.74	0.250	14
S-600	Standard Facing	827900	1.375	20.16	0.312	14
S-600	Low Coefficient Facing	827901	1.375	20.16	0.312	14
S-800	Standard Facing	828000	1.938	114.48	0.500	24
S-800	Low Coefficient Facing	828001	1.938	114.48	0.500	24

Keys are included.

Bushing Options

The purpose of Bushings is to reduce the brake bore size.
Bushings fit into the bore of the existing brake, reducing it to the size indicated.
Keys are provided with each Bushing.

Model	Product Number	Reduces Brake Bore Size to (In)	Shipping Wt. (Lbs)
S-450	819200	0.750	1
S-450	819300	0.875	1
S-450	819400	1.000	1
S-450	820000	No Bore/Customer machines	1
S-600	821800	0.750	2
S-600	820800	0.875	2
S-600	820900	1.000	2
S-600	821000	1.125	2
S-600	821100	1.188	2

Model	Product Number	Reduces Brake Bore Size to (In)	Shipping Wt. (Lbs)
S-600	821200	1.250	2
S-600	821900	No Bore/Customer machines	2
S-800	822700	1.000	2
S-800	822800	1.375	2
S-800	822900	1.500	2
S-800	823000	1.625	2
S-800	823100	1.688	2
S-800	823200	1.750	2
S-800	823800	No Bore/Customer machines	5

Accessories

Model	Component	Product Number	Shipping Wt. (Lbs)
S-450	Torque Pin Bracket	819900	1
S-450	Brake Safety Guard	817700	2
S-600	Torque Pin Bracket	821400	2
S-600	Brake Safety Guard	818300	2
S-800	Torque Pin Bracket	823400	2
S-800	Brake Safety Guard	826300	3

① Nexen's Advanced Performance 'S' Series Brakes provide high thermal capacity for unwind tension applications.
See pages 218 and 219

Torque Vs. Air Pressure

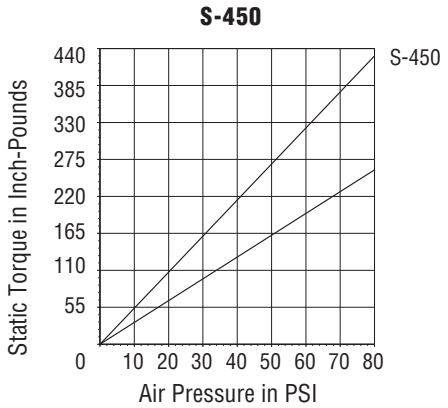

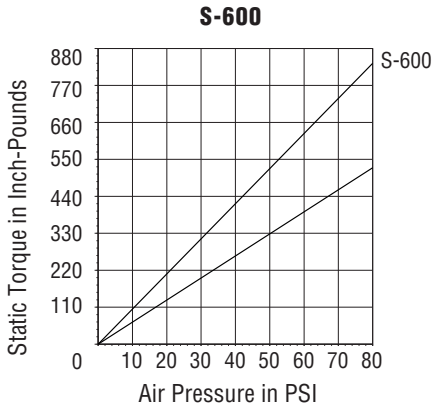

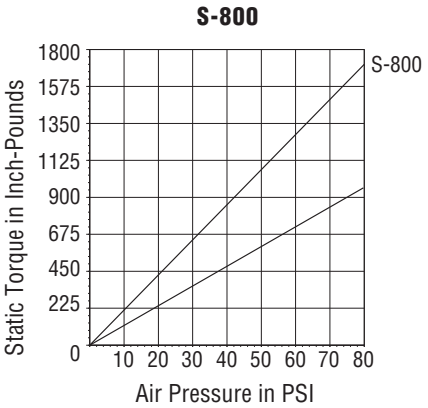

NOTE: Dynamic torque is approximately 85% of static torque.Static torque is 60% of standard facing torque with LOCO friction facings.

S-450, S-600 & S-800 MODEL STRAIGHT BORE FRICTION BRAKES - APPROXIMATE DIMENSIONS (INCHES)

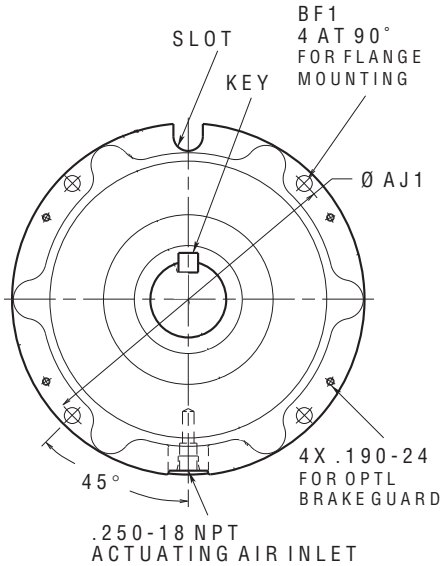

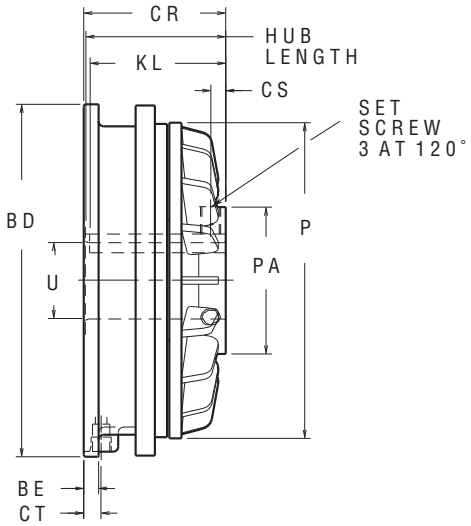

MODEL	PRODUCT NUMBER	AJ1	BD	BE	BF1	BF2	CR	CS	CT	KEY (SQ)	KL	P	PA	SET SCREWS	U +.001 -.000	SLOT WD	SLOT DP	HUB LENGTH
S-450	827800	5.310	5.94	0.25	0.28	--	2.51	0.18	0.44	.250	0.88	4.56	1.88	.250-20	1.125	0.38	0.65	2.50
S-450	827801	5.310	5.94	0.25	0.28	--	2.51	0.18	0.44	.250	0.88	4.56	1.88	.250-20	1.125	0.38	0.65	2.50
S-600	827900	6.500	7.19	0.38	0.359	--	3.20	0.25	0.41	.312	3.12	6.06	2.63	.375-16	1.375	0.63	0.66	3.13
S-600	827901	6.500	7.19	0.38	0.359	--	3.20	0.25	0.41	.312	3.12	6.06	2.63	.375-16	1.375	0.63	0.66	3.13
S-800	828000	8.380	9.00	0.38	.406	--	3.63	0.38	0.44	.500	3.56	8.06	3.75	.500-13	1.938	0.75	0.69	3.57
S-800	828001	8.380	9.00	0.38	.406	--	3.63	0.38	0.44	.500	3.56	8.06	3.75	.500-13	1.938	0.75	0.69	3.57

NOTE: Mating surface must be perpendicular to shaft within .010

Brake Safety Guard

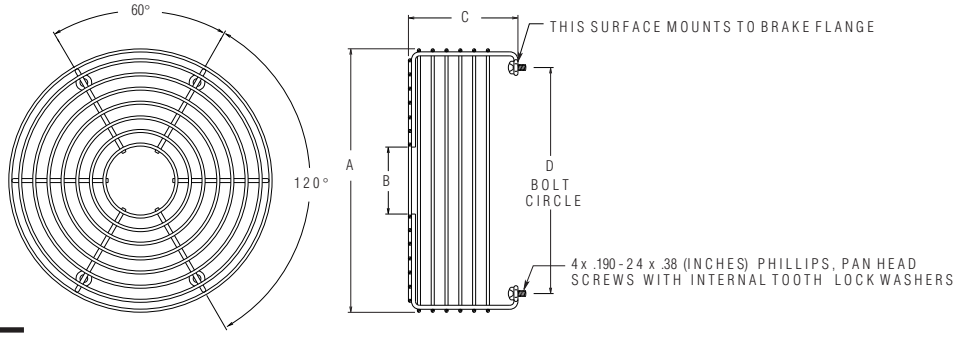

MODEL	PRODUCT NUMBER	A	B	C	D
S-450	817700	6.56	1.652	2.69	5.25
S-600	818300	7.87	2.00	3.28	6.75
S-800	826300	9.69	2.75	3.66	8.37

Torque Pin Bracket

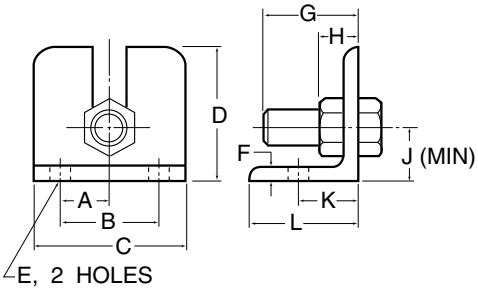

MODEL	PRODUCT NUMBER	A	B	C	D	E	F	G	H	J	K	L
S-450	819900	0.75	1.50	2.25	2.00	0.406	0.25	1.50	0.50	0.75	1.00	2.00
S-600	821400	1.00	2.00	3.00	2.50	0.406	0.25	1.625	.625	1.12	1.00	2.00
S-800	823400	1.12	2.25	3.50	3.00	0.469	0.31	2.00	0.75	1.19	1.38	2.50

STRAIGHT BORE FRICTION BRAKES MODELS S-1000, S-1200 & S-1400

- Static Torque capacity up to:
  S-1000/3450 In. Lbs. @ 80 psi
  S-1200/ 5500 In. Lbs. @ 80 psi
  S-1400/ 10,000 In. Lbs. @ 80 psi
- Maximum Operating Speed up to 1800 rpm
- Thermal Horsepower rating of:
  S-1000/ 3.0 @ 1800 rpm
  S-1200/ 6.3 @ 1800 rpm
  S-1400/ 12.5 @ 1800 rpm
- Heat Sink capacity of:
  S-1000/200,000 Ft. Lbs.
  S-1200/ 555,000 Ft. Lbs.
  S-1400/ 650,000 Ft. Lbs.
- Standard or Low Coefficient Facings

These self-adjusting air cooled brakes mount easily and come with:

- **Standard Bore Sizes:**
  S-1000/ 2.938 inches
  S-1200/ 3.375 inches
  S-1400/3.750 inches
- Split friction facings for easy replacement without brake removal or disassembly
- Thru-shaft design can be **flange mounted** or **shaft mounted** with a torque pin

Options and Accessories include:

- **Bushings** That allow you to customize the bore to your shaft diameter
  S-1000/9 Sizes
- Torque Pin Bracket allows you to anchor the housing
- Brake Safety Guard for protection

S-1000, S-1200 & S-1400 Model Straight Bore Friction Brakes①

Model	Brake	Product Number	Max. Bore with Standard Keyseat (In)	Inertia In (Lb.In²)	Key Size (SQ)	Shipping Wt. (Lbs)
S-1000	Standard Facing	828100	2.938	282.24	0.750	44
S-1000	Low Coefficient Facing	828101	2.938	282.24	0.750	44
S-1200	Standard Facing	822514	3.375	478.40	0.875	95
S-1200	Low Coefficient Facing	822517	3.375	478.40	0.875	95
S-1400	Standard Facing	822519	3.750	991.00	0.875	110
S-1400	Low Coefficient Facing	822524	3.750	991.00	0.875	110

Keys are included.

Bushing Options For S-1000 Brake

The purpose of Bushings is to reduce the brake bore size.
Bushings fit into the bore of the existing brake, reducing it to the size indicated.
Keys are provided with each Bushing.

Model	Product Number	Reduces Brake Bore Size to (In)	Shipping Wt.(Lbs)
S-1000	825800	1.250	4
S-1000	824700	1.938	4
S-1000	824800	2.000	4
S-1000	824900	2.188	4
S-1000	825000	2.250	4
S-1000	825100	2.438	4
S-1000	825200	2.500	4
S-1000	825300	2.750	4
S-1000	825900	No Bore/Customer machines	4

① Nexen's Advanced Performance 'S' Series Brakes provide high thermal capacity for unwind tension applications.
See pages 218 and 219

S-1200 and S-1400

Bore diameters smaller than standard are bored-to-order.

Accessories

Model	Component	Product Number	Shipping Wt. (Lbs)
S-1000	Torque Pin Bracket	825500	4
S-1000	Brake Safety Guard	828200	4
S-1200	Torque Pin Bracket	822515	6
S-1200	Brake Safety Guard	822516	7
S-1400	Torque Pin Bracket	822525	6
S-1400	Brake Safety Guard	822526	7

Torque Vs. Air Pressure

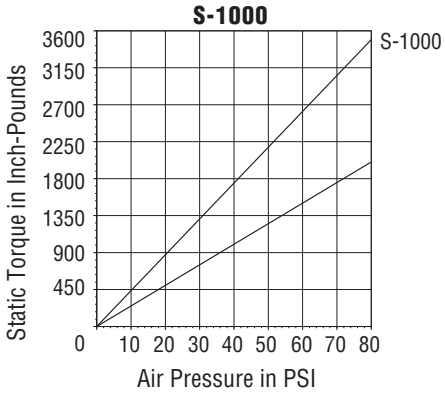

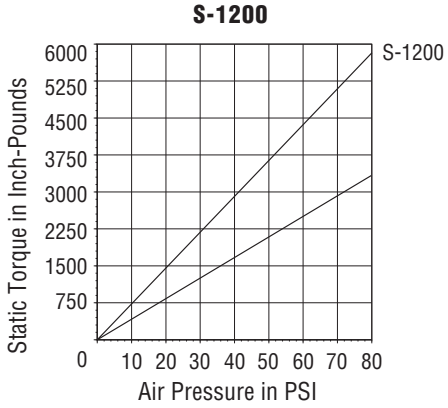

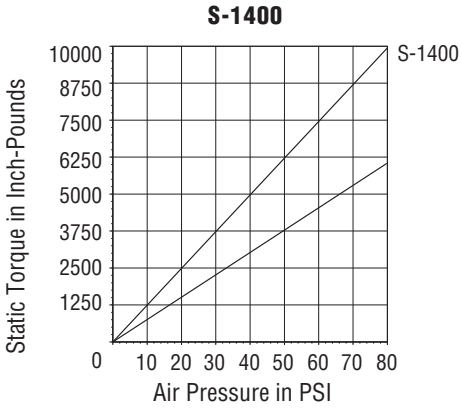

NOTE: Dynamic torque is approximately 85% of static torque.Static torque is 60% of standard facing torque with LOCO friction facings.

S-1000, S-1200 & S-1400 MODEL STRAIGHT BORE FRICTION BRAKES - APPROXIMATE DIMENSIONS (INCHES)

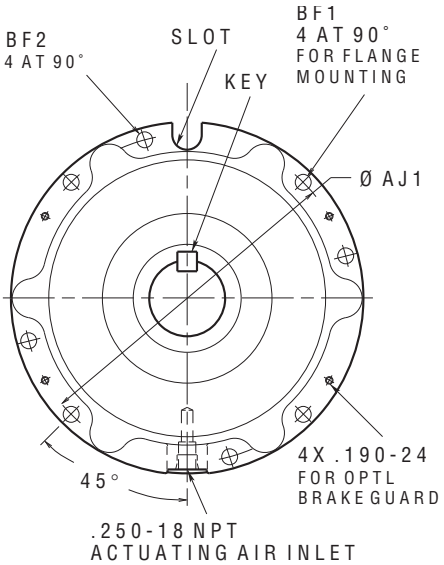

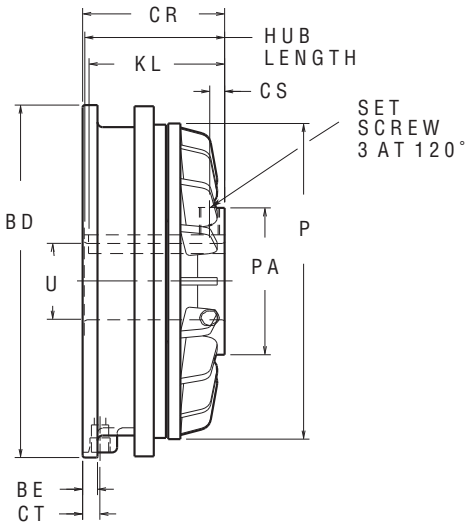

MODEL	PRODUCT NUMBER	AJ1	BD	BE	BF1	BF2	CR	CS	CT	KEY (SQ)	KL	P	PA	SET SCREWS	U +.001 -.000	SLOT WD	SLOT DP	HUB LENGTH
S-1000	828100	10.937	11.88	0.50	0.531	0.531	4.03	0.38	0.72	0.75	3.94	10.06	5.00	.500-13	2.938	0.88	0.91	3.97
S-1000	828101	10.937	11.88	0.50	0.531	0.531	4.03	0.38	0.72	0.75	3.94	10.06	5.00	.500-13	2.938	0.88	0.91	3.97
S-1200	822514	12.500	13.76	.70	.562	–	4.52	0.50	0.85	0.875	3.94	11.55	5.50	.500-13	3.375	1.00	1.10	4.95
S-1200	822517	12.500	13.76	.70	.562	–	4.52	0.50	0.85	0.875	3.94	11.55	5.50	.500-13	3.375	1.00	1.10	4.95
S-1400	822519	15.000	16.48	.82	.656	–	4.81	0.50	1.35	0.875	5.50	13.55	6.50	.500-13	3.750	1.13	1.31	5.50
S-1400	822523	15.000	16.48	.82	.656	–	4.81	0.50	1.35	0.875	5.50	13.55	6.50	.500-13	3.750	1.13	1.31	5.50

NOTE: Mating surface must be perpendicular to shaft within .010

Brake Safety Guard

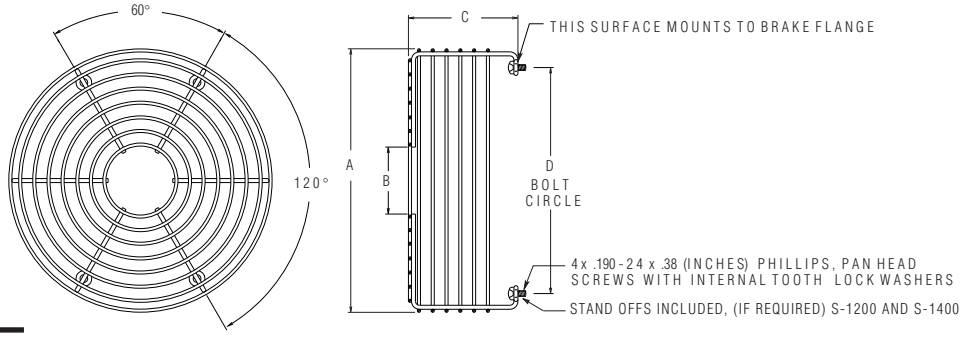

MODEL	PRODUCT NUMBER	A	B	C	D
T-1000	828200	12.44	3.75	5.09	11.12
T-1200	822516	14.18	3.75	4.73	12.75
T-1400	822526	16.77	4.30	4.77	15.00

Torque Pin Bracket

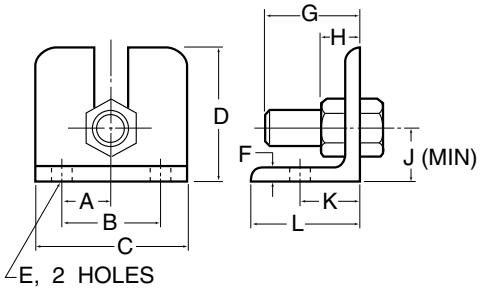

MODEL	PRODUCT NUMBER	A	B	C	D	E	F	G	H	J	K	L
T-1000	825500	1.25	2.50	4.00	4.00	0.53	0.375	2.50	.875	1.375	1.625	3.00
T-1200	822515	1.50	3.00	4.50	4.60	0.67	0.375	3.84	.920	1.750	1.910	3.45
T-1400	822525	1.50	3.00	4.50	4.60	0.67	0.375	3.84	.980	1.750	1.910	3.45

TAPERED BORE FRICTION BRAKES MODELS T-450, T-450A, T-600, T-600A & T-800, T-800A

- Static Torque capacity up to:
  T-450, T-450A/440 In. Lbs. @ 80 psi
  T-600, T-600A/840 In. Lbs. @ 80 psi
  T-800, T-800A/1600 In. Lbs. @ 80 psi
- Maximum Operating Speed up to 1800 rpm. Refer to "Thermal Capacity".
- Thermal Horsepower rating of:
  T-450/0.515 @ 1800 rpm
  T-450A/1.800 @ 1800 rpm
  T-600/1.300 @ 1800 rpm
  T-600A/4.500 @ 1800 rpm
  T-800/2.230 @ 1800 rpm
  T-800A/5.000 @ 1800 rpm
- Heat Sink capacity of:
  T-450/30,000 Ft. Lbs.
  T-600/60,000 Ft. Lbs.
  T-800/125,000 Ft. Lbs.
- Standard or Low Coefficient Facings

These self-adjusting air cooled brakes mount easily and come with:

- Tapered bore to accept QD Bushings for mounting flexibility
- Single plate finned friction discs provide high heat dissipation
- High dynamic torque capacity ensures fast load response
- Split friction facing for easy replacement without brake removal or disassembly

Options and Accessories include:

- Torque Pin Bracket allows you to anchor the housing
- Brake Safety Guard for protection
- **Tapered Bore** accepts **standard QD Bushings;**
  T-450/Size JA, T-600/Size SH & T-800/Size SK
  –NOT SUITABLE FOR FLANGE MOUNTING

T-450, T-450A, T-600A, T-600 & T-800, T-800 Model Tapered Bore Friction Brakes

Model	Brake	Product Number	Model	Brake	Product Number	Shipping Wt .(Lbs)	Inertia In (Lb.In²)
T-450	Standard Facing	819000	T-450A	Standard Facing	819003	14	4.74
T-450	LoCo* Facing	819001	T-450A	LoCo* Facing	819004	14	4.74
T-600	Standard Facing	820600	T-600A	Standard Facing	820604	14	20.16
T-600	LoCo Facing	820601	T-600A	LoCo Facing	820605	14	20.16
T-800	Standard Facing	824200	T-800A	Standard Facing	824202	24	114.48
T-800	LoCo Facing	824201	T-800A	LoCo Facing	824203	24	114.48

*Low Coefficient

QD Mounting Bushings

Quick Detachable "QD" Bushings are customer furnished. Bushings fit into the tapered bore of the brake, changing the bore to the size selected.

CAUTION: QD Bushings must be capable of carrying the torque produced by the brake. Check with the QD Bushing manufacturer for bushing torque ratings.

Torque Vs. Air Pressure

T-450, T-450A

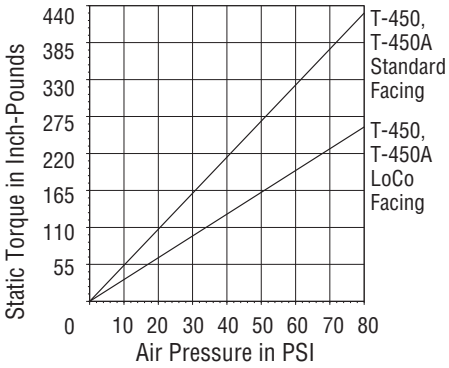

T-600, T-600A

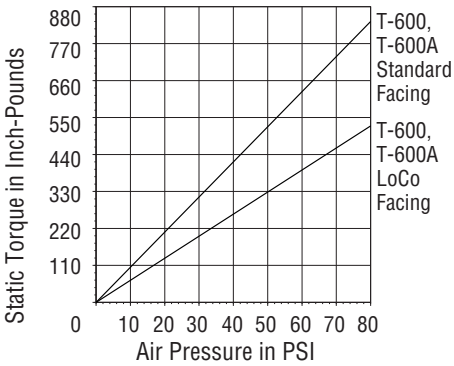

Accessories

Model	Component	Product Number	Shipping Wt. (Lbs)
T-450, T-450A	Torque Pin Bracket	819900	1
T-450, T-450A	Brake Safety Guard	817700	2
T-600, T-600A	Torque Pin Bracket	821400	2
T-600, T-600A	Brake Safety Guard	818300	2
T-800, T-800A	Torque Pin Bracket	823400	2
T-800, T-800A	Brake Safety Guard	826300	3

T-800, T-800A

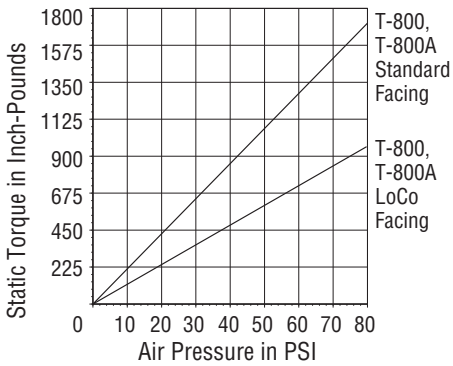

Thermal Capacity

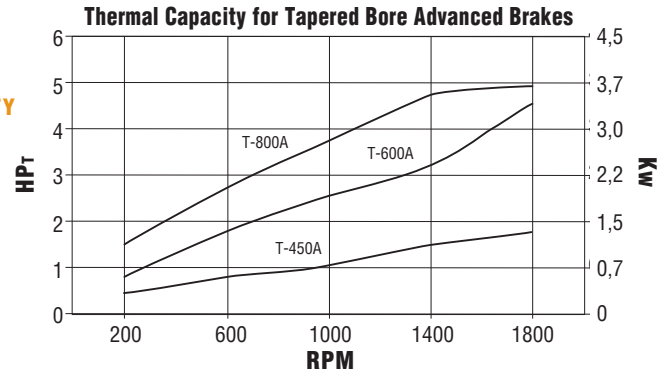

T-450, T-450A, T-600, T-600A & T-800, T-800A MODEL TAPERED BORE FRICTION BRAKES - APPROXIMATE DIMENSIONS (INCHES)

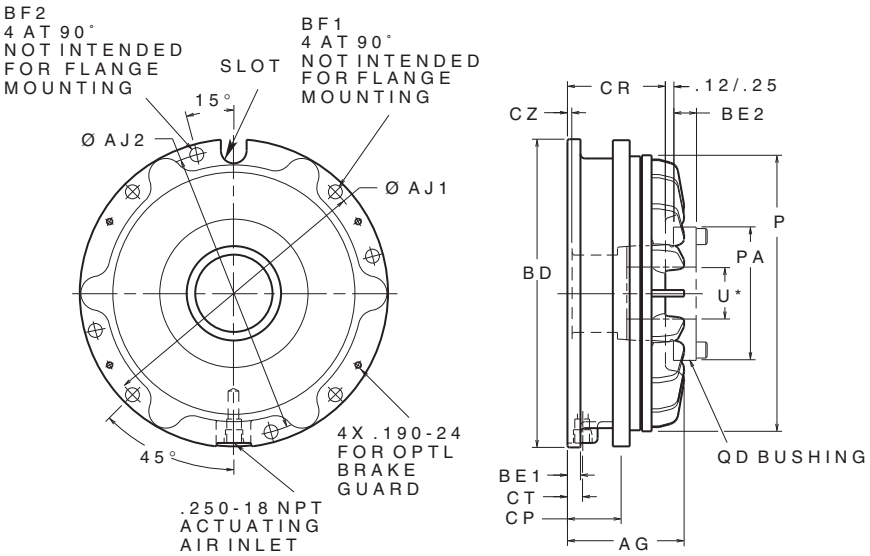

MODEL	PRODUCT NUMBER	MODEL	PRODUCT NUMBER	AG	AJ1	BD	BE1	BE2	BF1	CR	CT	CZ	P	PA	QD BUSHING	U*	SLOT WD	SLOT DP
T-450	819000	T-450A	819003	2.51	5.310	5.94	0.25	0.31	0.281	2.50	0.44	0.03	4.56	2.00	JA	1.000	0.38	0.65
T-450	819001	T-450A	819004	2.51	5.310	5.94	0.25	0.31	0.281	2.50	0.44	0.03	4.56	2.00	JA	1.000	0.38	0.65
T-600	820600	T-600A	820604	3.01	6.500	7.19	0.38	0.44	0.359	3.01	0.41	0.07	6.06	2.62	SH	1.375	0.63	0.66
T-600	820601	T-600A	820605	3.01	6.500	7.19	0.38	0.44	0.359	3.01	0.41	0.07	6.06	2.62	SH	1.375	0.63	0.66
T-800	824200	T-800A	824202	3.42	8.380	9.00	0.38	0.56	0.406	3.28	0.44	0.14	8.06	3.88	SK	2.125	0.75	0.69
T-800	824201	T-800A	824203	3.42	8.380	9.00	0.38	0.56	0.406	3.28	0.44	0.14	8.06	3.88	SK	2.125	0.75	0.69

* Maximum Bushing bore with standard keyway.

Brake Safety Guard

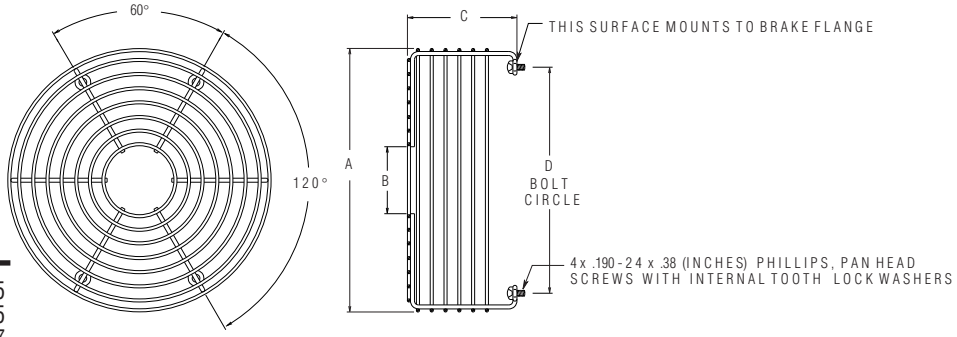

MODEL	PRODUCT NUMBER	A	B	C	D
T-450, T-450A	817700	6.56	1.62	2.69	5.25
T-600, T-600A	818300	7.875	2.00	3.281	6.75
T-800, T-800A	826300	9.69	2.75	3.66	8.37

Torque Pin Bracket

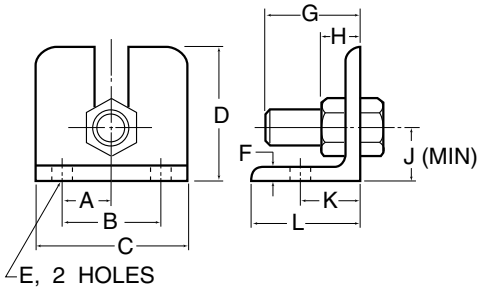

MODEL	PRODUCT NUMBER	A	B	C	D	E	F	G	H	J	K	L
T-450, T-450A	819900	0.75	1.50	2.25	2.00	0.406	0.25	1.50	0.50	0.75	1.00	2.00
T-600, T-600A	821400	1.00	2.00	3.00	2.50	0.406	0.25	1.625	.625	1.125	1.00	2.00
T-800, T-800A	823400	1.12	2.25	3.50	3.00	0.469	0.31	2.00	0.75	1.19	1.38	2.50

TAPERED BORE FRICTION BRAKES MODELS T-1000, T-1000A, T-1200 & T-1400

- Static Torque capacity up to:
  T-1000/3450 In. Lbs. @ 80 psi
  T-1000A/3450 In. Lbs. @ 80 psi
  T-1200/5500 In. Lbs. @ 80 psi
  T-1400/10,000 In. Lbs. @ 80 psi
- Maximum Operating Speed up to 1800 rpm
- Thermal Horsepower rating of:
  T-1000/3.0 @ 1800 rpm
  T-1000A/5.5 @ 1800 rpm
  T-1200/6.3 @ 1800 rpm
  T-1400/12.5 @ 1800 rpm
- Heat Sink capacity of:
  T-1000/200,000 Ft. Lbs.
  T-1200/ 555,000 Ft. Lbs.
  T-1400/ 650,000 Ft. Lbs.
- Standard or Low Coefficient Facings

These self-adjusting air cooled brakes mount easily and come with:

- Tapered bore to accept QD Bushings for mounting flexibility
- Single plate finned friction discs provide high heat dissipation
- High dynamic torque capacity ensures fast load response
- Split friction facing for easy replacement without brake removal or disassembly

Options and Accessories include:

- Torque Pin Bracket allows you to anchor the housing
- Brake Safety Guard for protection
- **Tapered Bore** accepts **standard QD Bushings;**
  T-1000/Size E, T-1000A/Size E,
  T-1200/Size E & T-1400/Size F

–NOT SUITABLE FOR FLANGE MOUNTING

T-1000, T-1000A, T-1200 & T-1400 Model Tapered Bore Friction Brakes

Model	Brake	Product Number	Model	Product Number	Shipping Wt. (Lbs)	Inertia In (Lb.In²)
T-1000	Standard Facing	824300	T-1000A	824305	44	282.24
T-1000	Low Coefficient Facing	824301	T-1000A	824306	44	282.24
T-1200	Standard Facing	822510			95	478.40
T-1200	Low Coefficient Facing	822518			95	478.40
T-1400	Standard Facing	822520			110	991.00
T-1400	Low Coefficient Facing	822523			110	991.00

QD Mounting Bushings

Quick Detachable "QD" Bushings are customer furnished. Bushings fit into the tapered bore of the brake, changing the bore to the size selected.

CAUTION: QD Bushings must be capable of carrying the torque produced by the brake. Check with the QD Bushing manufacturer for bushing torque ratings.

Accessories

Model	Component	Product Number	Shipping Wt. (Lbs)
T-1000, T-1000A	Torque Pin Bracket	825500	4
T-1000, T-1000A	Brake Safety Guard	828200	4
T-1200	Torque Pin Bracket	822515	6
T-1200	Brake Safety Guard	822516	7
T-1400	Torque Pin Bracket	822525	6
T-1400	Brake Safety Guard	822526	7

Torque Vs. Air Pressure

T-1000, T-1000A

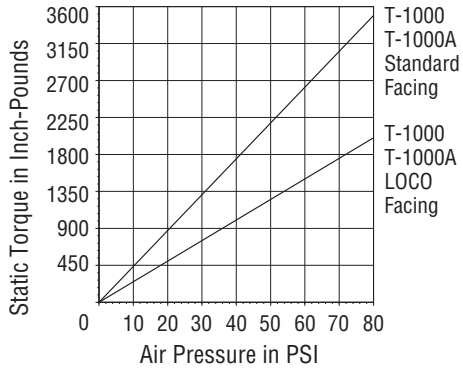

T-1200

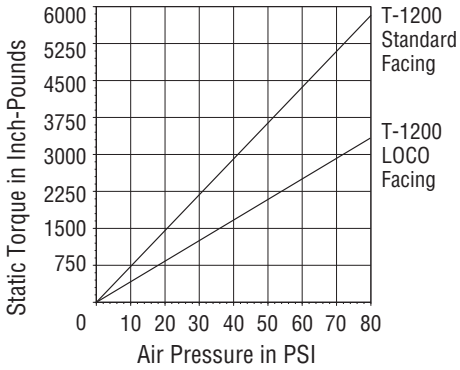

T-1400

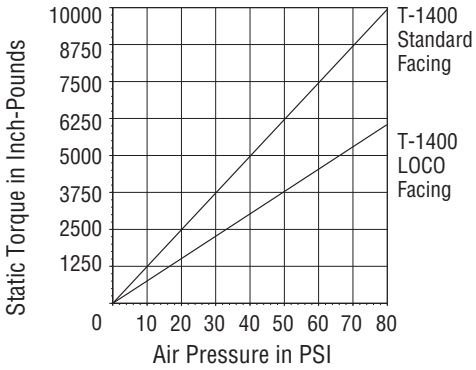

T-1000, T-1000A, T-1200 & T-1400 MODEL TAPERED BORE FRICTION BRAKES - APPROXIMATE DIMENSIONS (INCHES)

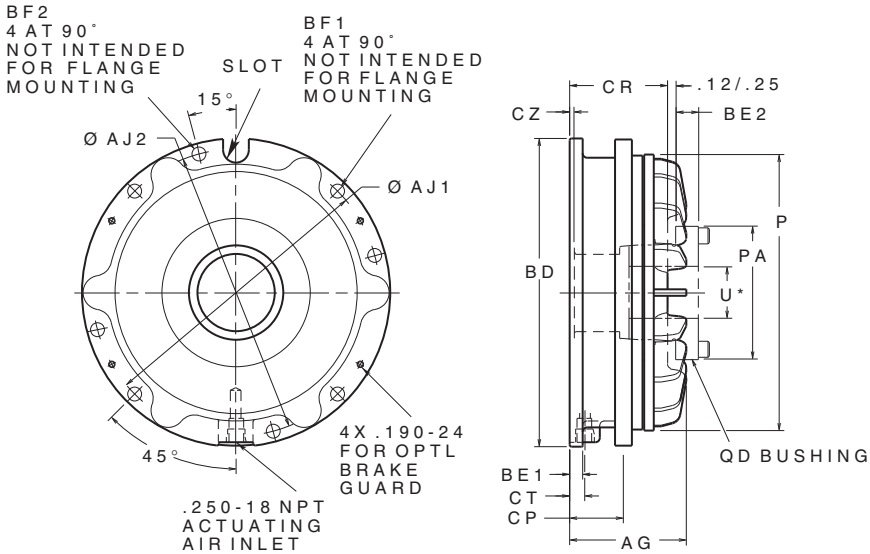

MODEL	PRODUCT NUMBERS	AG	AJ1	AJ2	BD	BE1	BE2	BF1	CR	CT	CZ	P	PA	QD BUSHING	U*	SLOT WD	SLOT DP
T-1000	824300 & 824301	4.00	10.937	11.000	11.88	0.50	0.88	0.531	4.22	0.72	0.09	10.06	6.00	E	2.875	0.88	0.91
T-1000A	824305 & 824306	4.00	10.937	11.000	11.88	0.50	0.88	0.531	4.22	0.72	0.09	10.06	6.00	E	2.875	0.88	0.91
T-1200	822510 & 822518	4.70	12.500	12.500	13.76	0.70	0.88	0.562	4.10	0.85	–	11.55	6.00	E	2.875	1.00	1.10
T-1400	822520 & 822523	5.59	15.000	15.000	16.48	0.82	1.00	0.656	4.81	1.35	–	13.55	6.62	F	3.250	1.125	1.31

Maximum Bushing bore with standard keyway.

Brake Safety Guard

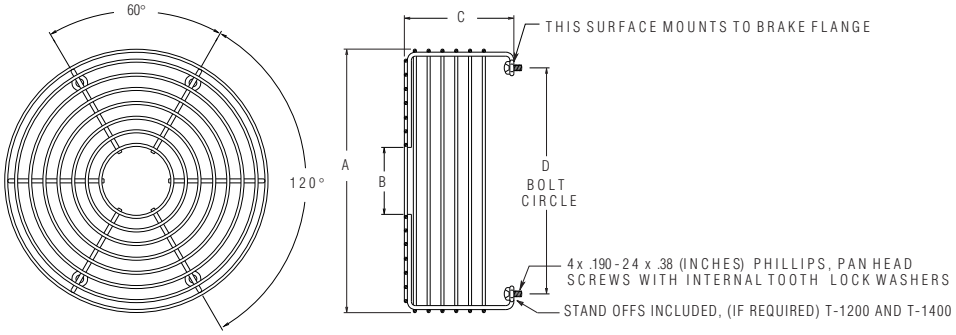

MODEL	PRODUCT NUMBER	A	B	C	D
T-1000, T-1000A	828200	12.44	3.75	5.09	11.12
T-1200	822516	14.18	3.75	4.73	12.75
T-1400	822526	16.77	4.30	4.77	15.00

Torque Pin Bracket

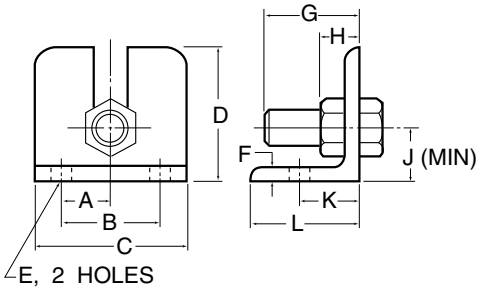

MODEL	PRODUCT NUMBER	A	B	C	D	E	F	G	H	J	K	L
T-1000, T-1000A	825500	1.25	2.50	4.00	4.00	0.53	0.375	2.50	.875	1.375	1.625	3.00
T-1200	822515	1.50	3.00	4.50	4.60	0.67	0.375	3.84	.920	1.750	1.910	3.45
T-1400	822525	1.50	3.00	4.50	4.60	0.67	0.375	3.84	.980	1.750	1.910	3.45

TAPERED BORE SPRING ENGAGED BRAKES MODELS TSE-450, TSE-600 & TSE-800

- Static Torque capacity up to:
  TSE-450/450 In. Lbs.
  TSE-600/985 In. Lbs.
  TSE-800/2500 In. Lbs.
- Maximum Operating Speed up to 1800 rpm
- Thermal Horsepower rating of:
  TSE-450/0.515 @ 1800 rpm
  TSE-600/1.300 @ 1800 rpm
  TSE-800/2.230 @ 1800 rpm
- Heat Sink capacity of:
  TSE-450/30,000 Ft. Lbs.
  TSE-600/60,000 Ft. Lbs.
  TSE-800/125,000 Ft. Lbs.

These spring engaged, air disengaged brakes mount easily and come with:

- Open spring sockets that allow you to add or remove springs to fit your torque needs
- Tapered bore to accept QD Bushings for mounting flexibility
- Single plate finned friction discs provide high heat dissipation
- High dynamic torque capacity ensures fast load response
- Split friction facing for easy replacement without brake removal or disassembly
- Flow restrictor valve controls disengagement air to prevent shock load on brake components

Options and Accessories include:

- Torque Pin Bracket allows you to anchor the housing
- Brake Safety Guard for protection
- **Tapered Bore** accepts **standard QD Bushings;**
  TSE-450/Size JA, TSE-600/Size SH & TSE-800/Size SK
  –NOT SUITABLE FOR FLANGE MOUNTING

TSE-450, TSE-600 & TSE-800 Model Tapered Bore Spring Engaged Brakes

Model	Component	Product Number	Number of Springs	Inertia In (Lb.In²)	Torque Rating (In Lb ± -10%)	MIN Disengagement Air Pressure ± 10%	Shipping Wt. (Lbs)
TSE-450	Brake	818862	6	4.74	240	50 PSI	13
TSE-450	Brake	818800	8	4.74	360	72 PSI	13
TSE-450	Brake	818861	10	4.74	450	90 PSI	13
TSE-600	Brake	820362	6	20.16	520	50 PSI	19
TSE-600	Brake	820300	8	20.16	785	72 PSI	19
TSE-600	Brake	820361	10	20.16	985	90 PSI	19
TSE-800	Brake	822495	6	114.48	1300	50 PSI	31
TSE-800	Brake	822494	8	114.48	2000	72 PSI	31
TSE-800	Brake	822496	10	114.48	2500	90 PSI	31

QD Mounting Bushings

Quick detachable "QD" Bushings are customer furnished. The brake bore is easily adapted to many shaft sizes with use of QD Bushing and the proper key. Bushings fit into the bore of the brake, changing the bore to the size selected.

Accessories

Model	Component	Product Number	Shipping Wt. (Lbs)
TSE-450	Torque Pin Bracket	819900	1
TSE-450	Brake Safety Guard	817700	2
TSE-600	Torque Pin Bracket	821400	2
TSE-600	Brake Safety Guard	818300	2
TSE-800	Torque Pin Bracket	823400	2
TSE-800	Brake Safety Guard	826300	3

Torque Vs. Air Pressure

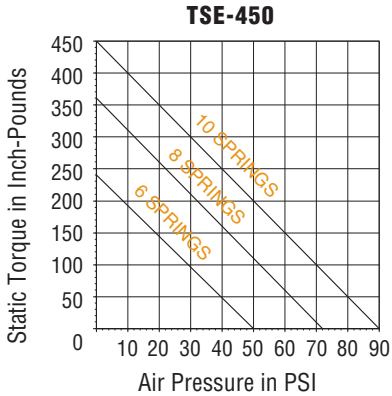

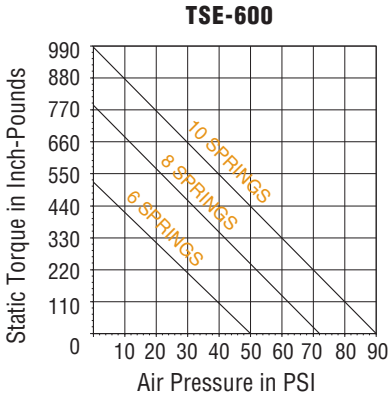

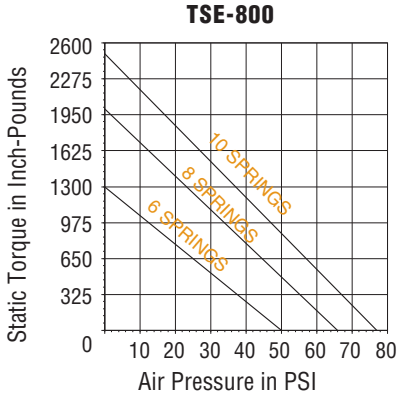

NOTE: Torque values for spring applied brakes will vary over the life of the brake as a function of spring force and the burnishing process of the lining. Over the life of the linings, torque values may exceed published values by up to 40%.

TSE-450, TSE-600 & TSE-800 MODEL TAPERED BORE SPRING ENGAGED BRAKES - APPROXIMATE DIMENSIONS (INCHES)

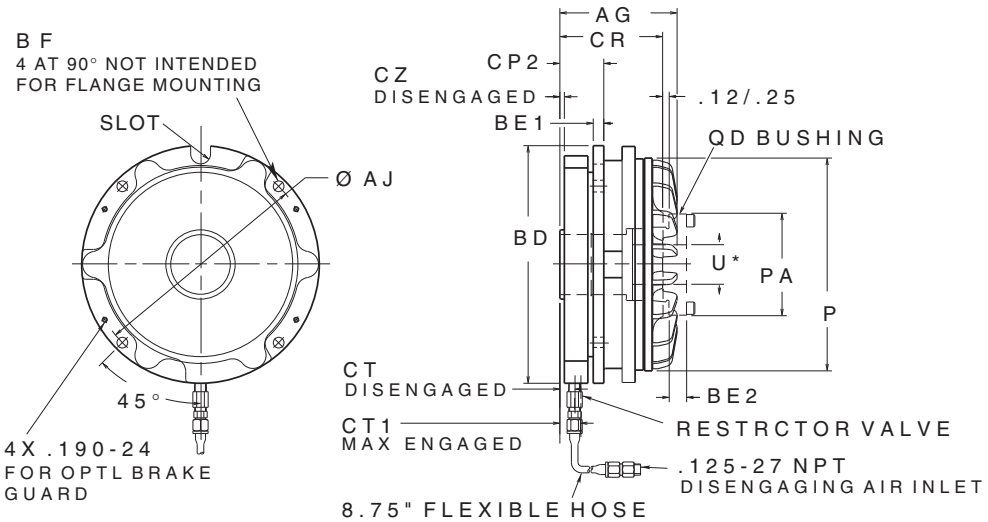

MODEL	PRODUCT NUMBER	AG	AJ	BD	BE1	BE2	BF	CP2	CR	CT	CT1	CZ	P	PA	U*	SLOT WD	QD DP	BUSHING
TSE-450	818862	3.57	5.312	5.94	0.27	0.31	0.281	1.32	3.12	0.35	0.49	0.01	4.56	2.00	1.000	0.375	0.66	JA
TSE-450	818880	3.57	5.312	5.94	0.27	0.31	0.281	1.32	3.12	0.35	0.49	0.01	4.56	2.00	1.000	0.375	0.66	JA
TSE-450	818861	3.57	5.312	5.94	0.27	0.31	0.281	1.32	3.12	0.35	0.49	0.01	4.56	2.00	1.000	0.375	0.66	JA
TSE-600	820362	4.06	6.500	7.19	0.40	0.44	0.359	1.45	3.47	0.33	0.47	-0.01	6.06	2.62	1.375	0.625	0.69	SH
TSE-600	820300	4.06	6.500	7.19	0.40	0.44	0.359	1.45	3.47	0.33	0.47	-0.01	6.06	2.62	1.375	0.625	0.69	SH
TSE-600	820361	4.06	6.500	7.19	0.40	0.44	0.359	1.45	3.47	0.33	0.47	-0.01	6.06	2.62	1.375	0.625	0.69	SH
TSE-800	822495	4.44	8.375	9.00	0.40	0.56	0.406	1.66	3.89	0.51	0.72	0.12	8.06	3.88	2.125	0.750	0.69	SK
TSE-800	822494	4.44	8.375	9.00	0.40	0.56	0.406	1.66	3.89	0.51	0.72	0.12	8.06	3.88	2.125	0.750	0.69	SK
TSE-800	822496	4.44	8.375	9.00	0.40	0.56	0.406	1.66	3.89	0.51	0.72	0.12	8.06	3.88	2.125	0.750	0.69	SK

*Maximum Bushing bore with standard keyway.

Brake Safety Guard

MODEL	PRODUCT NUMBER	A	B	C	D
TSE-450	817700	6.56	1.62	2.69	5.25
TSE-600	818300	7.88	2.00	3.28	6.75
TSE-800	826300	9.69	2.75	3.66	8.38

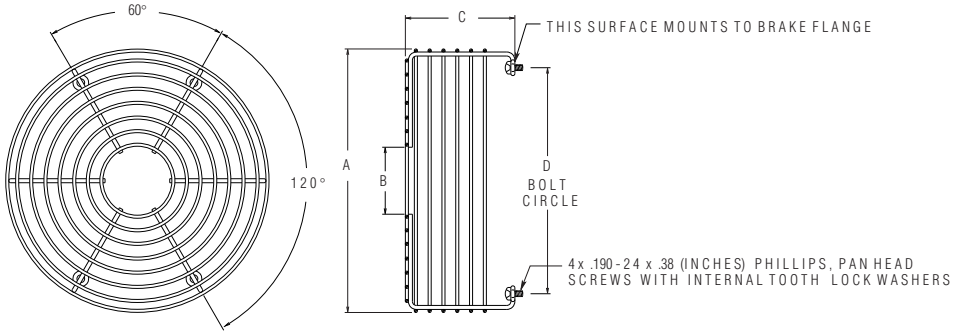

Torque Pin Bracket

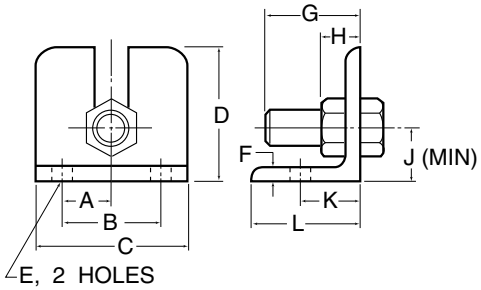

MODEL	PRODUCT NUMBER	A	B	C	D	E	F	G	H	J	K	L
TSE-450	819900	0.75	1.50	2.25	2.00	0.406	0.25	1.50	0.50	0.75	1.00	2.00
TSE-600	821400	1.00	2.00	3.00	2.50	0.406	0.25	1.625	0.625	1.125	1.00	2.00
TSE-800	823400	1.125	2.25	3.50	3.00	0.469	0.31	2.00	0.75	1.188	1.375	2.50

Note

For alternate torque arms see page 155.

TAPERED BORE SPRING ENGAGED BRAKES MODELS TSE-1000, TSE-1200 & TSE-1400

- Static Torque capacity up to:
  TSE-1000/3700 In. Lbs.
  TSE-1200/5500 In. Lbs.
  TSE-1400/8000 In. Lbs.
- Maximum Operating Speed up to 1800 rpm
- Thermal Horsepower rating of:
  TSE-1000/3.0 @ 1800 rpm
  TSE-1200/6.3 @ 1800 rpm
  TSE-1400/ 12.5 @ 1800 rpm
- Heat Sink capacity of:
  TSE-1000/200,000 Ft. Lbs.
  TSE-1200/ 555,000 Ft. Lbs.
  TSE-1400/ 650,000 Ft. Lbs.

These spring engaged, air disengaged brakes mount easily and come with:

- Open spring sockets that allow you to add or remove springs to fit your torque needs
- Tapered bore to accept QD Bushings for mounting flexibility
- Single plate finned friction discs provide high heat dissipation
- High dynamic torque capacity ensures fast load response
- Split friction facing for easy replacement without brake removal or disassembly
- Flow restrictor valve controls disengagement air to prevent shock load on brake components

Options and Accessories include:

- Torque Pin Bracket allows you to anchor the housing
- Brake Safety Guard for protection
- **Tapered Bore** accepts **standard QD Bushings;**
  TSE-1000/Size E, TSE-1200/Size E, & TSE-1400/Size F
  –NOT SUITABLE FOR FLANGE MOUNTING

TSE-1000, TSE-1200 & TSE-1400 Model Tapered Bore Spring Engaged Brakes

Model	Component	Product Number	Number of Springs	Inertia In (Lb.In²)	MIN Torque Rating (In Lb ± -10%)	Disengagement Air Pressure ± 10%	Shipping Wt. (Lbs)
TSE-1000	Brake	822562	6	282.24	2200	50 PSI	68
TSE-1000	Brake	822500	8	282.24	3000	72 PSI	68
TSE-1000	Brake	822561	10	282.24	3700	90 PSI	68
TSE-1200	Brake	822713	12	478.40	3750	70 PSI	113
TSE-1200	Brake	822714	14	478.40	4375	80 PS	113
TSE-1200	Brake	822710	16	478.40	5000	90 PSI	113
TSE-1400	Brake	822723	12	991.00	6000	70 PSI	131
TSE-1400	Brake	822724	14	991.00	7000	80 PSI	131
TSE-1400	Brake	822720	16	991.00	8000	90 PSI	131

QD Mounting Bushings

Quick detachable "QD" Bushings are customer furnished. The brake bore is easily adapted to many shaft sizes with use of QD Bushing and the proper key. Bushings fit into the bore of the brake, changing the bore to the size selected.

Accessories

Model	Component	Product Number	Shipping Wt. (Lbs)
TSE-1000	Torque Pin Bracket	825500	4
TSE-1000	Brake Safety Guard	828200	4
TSE-1200	Torque Pin Bracket	822515	6
TSE-1200	Brake Safety Guard	822516	7
TSE-1400	Torque Pin Bracket	822525	6
TSE-1400	Brake Safety Guard	822526	7

Torque Vs. Air Pressure

TSE-1000

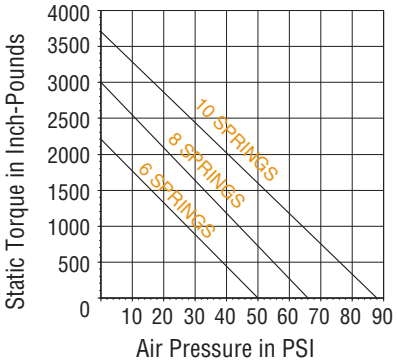

TSE-1200

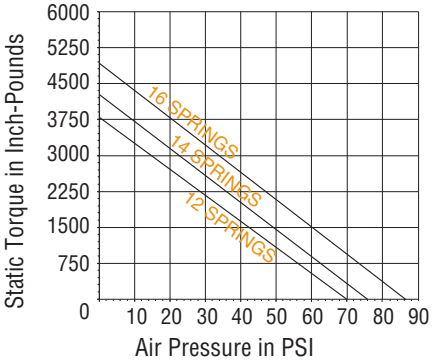

TSE-1400

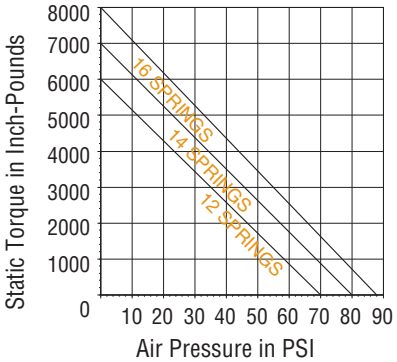

NOTE: Torque values for spring applied brakes will vary over the life of the brake as a function of spring force and the burnishing process of the lining. Over the life of the linings, torque values may exceed published values by up to 40%.

TSE-1000, TSE-1200 & TSE-1400 MODEL TAPERED BORE SPRING ENGAGED BRAKES - APPROXIMATE DIMENSIONS (INCHES)

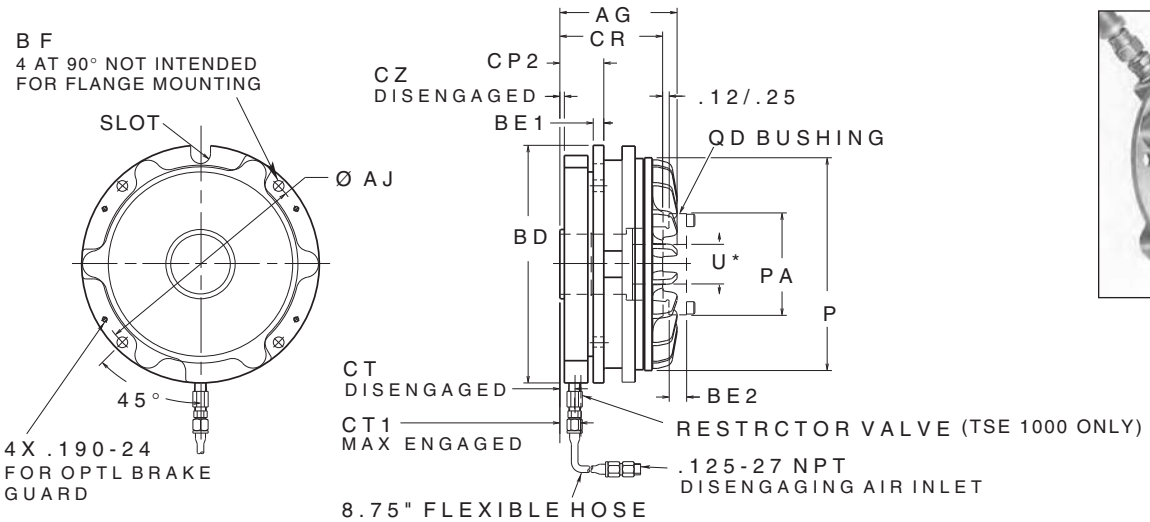

MODEL	PRODUCT NUMBER	AG	AJ	BD	BE1	BE2	BF	CP2	CR	CT	CT1	CZ	P	PA	U*	SLOT WD	SLOT DP	QD BUSHING
TSE-1000	822562	5.42	10.937	11.88	0.52	0.88	.531	1.71	4.61	0.39	0.60	-0.18	10.06	6.00	2.875	0.88	0.91	E
TSE-1000	822500	5.42	10.937	11.88	0.52	0.88	.531	1.71	4.61	0.39	0.60	-0.18	10.06	6.00	2.875	0.88	0.91	E
TSE-1000	822561	5.42	10.937	11.88	0.52	0.88	.531	1.71	4.61	0.39	0.60	-0.18	10.06	6.00	2.875	0.88	0.91	E
TSE-1200	822710	6.04	12.500	13.76	0.70	0.88	.562	2.54	5.44	1.71	2.02	-0.99	11.55	6.00	2.875	1.00	1.10	E
TSE-1200	822713	6.04	12.500	13.76	0.70	0.88	.562	2.54	5.44	1.71	2.02	-0.99	11.55	6.00	2.875	1.00	1.10	E
TSE-1200	822714	6.04	12.500	13.76	0.70	0.88	.562	2.54	5.44	1.71	2.02	-0.99	11.55	6.00	2.875	1.00	1.10	E
TSE-1400	822720	6.93	15.000	16.48	0.82	1.00	.656	2.94	6.15	1.71	2.02	-1.01	13.55	6.63	3.25	1.125	1.31	F
TSE-1400	822723	6.93	15.000	16.48	0.82	1.00	.656	2.94	6.15	1.71	2.02	-1.01	13.55	6.63	3.25	1.125	1.31	F
TSE-1400	822724	6.93	15.000	16.48	0.82	1.00	.656	2.94	6.15	1.71	2.02	-1.01	13.55	6.63	3.25	1.125	1.31	F

*Maximum Bushing bore with standard keyway.

Brake Safety Guard

MODEL	PRODUCT NUMBER	A	B	C	D
TSE-1000	828200	12.44	3.75	5.09	11.12
TSE-1200	822516	14.18	3.75	4.73	12.75
TSE-1400	822526	16.77	4.30	4.77	15.00

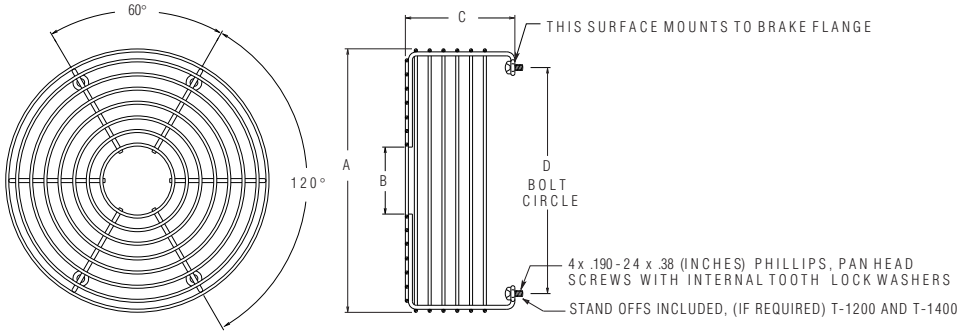

Torque Pin Bracket

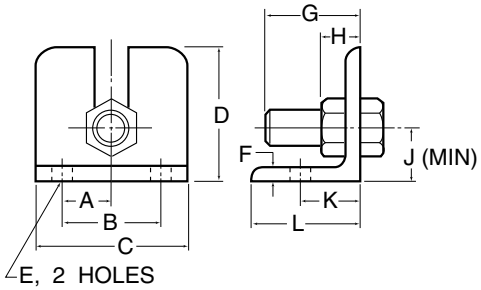

MODEL	PRODUCT NUMBER	A	B	C	D	E	F	G	H	J	K	L
TSE-1000	825500	1.25	2.50	4.00	4.00	0.53	0.375	2.50	.875	1.375	1.625	3.00
TSE-1200	822515	1.50	3.00	4.50	4.60	0.67	0.375	3.84	.920	1.750	1.910	3.45
TSE-1400	822525	1.50	3.00	4.50	4.60	0.67	0.375	3.84	.980	1.750	1.910	3.45

FMBES MOTOR BRAKE MODELS 625, 875, 1125 & 1375

The FMBES is a NEMA C-Flange mounted, spring-engaged, nickel-plated motor brake that combines spring-on and air-release actuation with other performance-enhancing features to provide optimal reliability and application flexibility. Mountable on single shaft electric motors with 56C to 215TC frame sizes, the FMBES uses spring-actuation and designed-in greater heat-sink capacity to eliminate the heat-related brake inefficiencies and failure commonly associated with electric motor brakes. Additionally, the FMBES' dual friction interface provides a large volume of useable friction material for longer facing life.

- **Bore Sizes** of 0.625, 0.875, 1.125 and 1.375 in.
- Static Torque capacity up to 900 inch lbs.
- Covers fractional hp through 10 hp
- Maximum Operating Speed up to 3600 rpm

FMBES Features and Benefits:

- Spring-engaged for holding in power-off conditions
- Self-adjustion for friction material wear a standard feature. Totally eliminates the necessity to shut down for periodic adjustments
- No special reqirements or additional parts for vertical-mounted applications
- Air-released, greater heat-sink capacity for cooler, more reliable performance
- Ideal for high-cycle applications
- Water protection per NEMA standard 1.26.55 (Waterproof machines)
- Torque from 17 to 75 ft. lbs. for varied applications, streamlined product selection
- Bearing arrangement designed for excellent overhung load capacity and bearing life
- Mounts on single shaft motors
- Side-mounted manual brake release
- Set screw to securely hold motor shaft key
- For additional corrosion protection, contact the factory

FMBES Double C-Faced Motor Brakes

FMBES is a NEMA C-Flange Mounted, Spring-engaged, Nickel-plated Motor Brake.

Model Number	Product Number	Bore (In)	Static Torque (In. Lbs)	HP_T Up To	Inertia lb. ft^2	MAX RPM	MIN Diseng. Air Pressure	Overhung Load Capacity (Lbs)	Shipping Wt. (Lbs)
FMBES-625-CC	827320	0.625	200	0.30	.024	3600	30	170	20
FMBES-625-CC	827323	0.625	100	0.30	.024	3600	30	170	20
FMBES-875-CC	827340	0.875	300	0.30	.024	3600	40	170	20
FMBES-875-CC	827343	0.875	100	0.30	.024	3600	40	170	20
FMBES-875-CC	827344	0.875	200	0.30	.024	3600	40	170	20
FMBES-1125-CC	827360	1.125	420	0.44	.104	1800	60	290	40
FMBES-1375-CC	827380	1.375	900	0.44	.104	1800	60	290	50

Motor Brake Controls

3-Way Air Controls, Normally Closed, Inline Mount

Volts	Product Number	Operating Range (PSI)	Effective Orifice (In)	Port Size (NPT)	Power Consumption (Watts)
24 VDC	948805	0 – 150	.0468	.125	6
90 VDC	948806	0 – 150	.0468	.125	6
120 VAC	948802	0 – 150	.0468	.125	6
240 VAC	948807	0 – 150	.0468	.125	6

3-Way Air Controls, Normally Closed, Air Inlet Mount

Volts	Product Number	Operating Range (PSI)	Effective Orifice (In)	Port Size (NPT)	Power Consumption (Watts)
24 VDC	948808	0 – 150	.0468	.125	6
90 VDC	948809	0 – 150	.0468	.125	6
120 VAC	948804	0 – 150	.0468	.125	6
240 VAC	948810	0 – 150	.0468	.125	6

NEMA Motor/Frame Selection Chart

Use this chart as specification and operational criteria for your application.

HP of Motor	RPM	Frame Number	Motor Shaft (In)	Brake Model Number
1/4	1800	56C	0.625	FMBES-625
1/4	1200	56C	0.625	FMBES-625
1/3	1800	56C	0.625	FMBES-625
1/3	1200	56C	0.625	FMBES-625
1/2	1800	56C	0.625	FMBES-625
1/2	1200	56C	0.625	FMBES-625
1/2	900	143TC	0.875	FMBES-875
3/4	1800	56C	0.625	FMBES-625
3/4	1200	143TC	0.875	FMBES-875
3/4	900	145TC	0.875	FMBES-875
1	1800	56TC	0.625	FMBES-625
1	1800	143TC	0.875	FMBES-875
1	1200	145TC	0.875	FMBES-875
1	900	182TC	1.125	FMBES-1125

HP of Motor	RPM	Frame Number	Motor Shaft (In)	Brake Model Number
1-1/2	1800	145TC	0.875	FMBES-875
1-1/2	1200	182TC	1.125	FMBES-1125
1-1/2	900	184TC	1.125	FMBES-1125
2	1800	145TC	0.875	FMBES-875
2	1200	184TC	1.125	FMBES-1125
2	900	213TC	1.375	FMBES-1375
3	1800	182TC	1.125	FMBES-1125
3	1200	213TC	1.375	FMBES-1375
3	900	215TC	1.375	FMBES-1375
5	1800	184TC	1.125	FMBES-1125
5	1200	215TC	1.375	FMBES-1375
7-1/2	1800	213TC	1.375	FMBES-1375
10	1800	215TC	1.375	FMBES-1375

FMBES DOUBLE C-FACED MOTOR BRAKES - APPROXIMATE DIMENSIONS (INCHES)

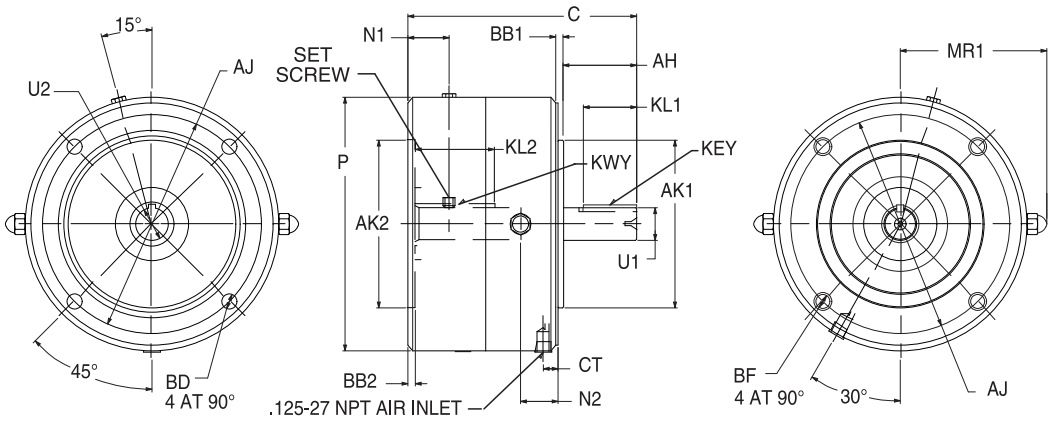

MODEL	PRODUCT NUMBER	AH	AJ	AK1 $^{+.000}_{-.002}$	AK2 $^{+.002}_{-.000}$	BB1	BB2	BD	BF	C	CT	KEY (SQ)	KL1	KWY WD	KWY OP	KL2	P	MR1	N1	N2	U1 $^{+.000}_{-.001}$	U2 $^{+.001}_{-.000}$
FMBES-625-CC	827320	2.12	5.875	4.500	4.500	0.06	0.20	0.41	.375-16	6.14	0.40	.188	1.43	.188	.094	2.12	6.81	3.93	1.10	1.06	.625	.625
FMBES-625-CC	827323	2.12	5.875	4.500	4.500	0.06	0.20	0.41	.375-16	6.14	0.40	.188	1.43	.188	.094	2.12	6.81	3.93	1.10	1.06	.625	.625
FMBES-875-CC	827340	2.12	5.875	4.500	4.500	0.06	0.20	0.41	.375-16	6.14	0.40	.188	1.43	.188	.094	2.12	6.81	3.93	1.10	1.06	.875	.875
FMBES-875-CC	827343	2.12	5.875	4.500	4.500	0.06	0.20	0.41	.375-16	6.14	0.40	.188	1.43	.188	.094	2.12	6.81	3.93	1.10	1.06	.875	.875
FMBES-875-CC	827344	2.12	5.875	4.500	4.500	0.06	0.20	0.41	.375-16	6.14	0.40	.188	1.43	.188	.094	2.12	6.81	3.93	1.10	1.06	.875	.875
FMBES-1125-CC	827360	2.63	7.250	8.500	8.500	0.25	0.20	0.53	.500-13	7.47	.542	.251	1.78	.251	.125	2.75	9.00	5.05	1.54	1.38	1.125	1.125
FMBES-1375-CC	827380	3.13	7.250	8.500	8.500	0.25	0.20	0.53	.500-13	7.85	.542	.314	1.78	.314	.156	2.75	9.00	5.05	1.54	1.38	1.375	1.375

SE MODEL SPRING ENGAGED BRAKES

These Spring Engaged Brakes provide protection to equipment when fast, dependable stops are required for non-cyclic applications:

- Static Torque capacity up to 1150 In. Lbs.
- Maximum Operating Speed up to 1800 rpm
- **4 bore sizes** up to 1.375 inches
- Thermal Horsepower rating up to 0.200

These air disengaged, spring engaged brakes are simply designed, yet are loaded with features:

- Restrictor Valve controls exhausted air during engagement, ensuring a smooth stop
- Only 3 moving parts insure durability and dependability
- Mounting flexibility–NEMA C **Flange mount** or **Shaft mount** capability. Not intended for vertical mount.
- No dynamic thrust load on bearings when unit is engaged
- No thrust load, or virtually no radial load, when unit is disengaged and motor is running
- Manual release mechanism allows ease of maintenance
- Optional Torque Arm anchors brake housing
- Optional Adapter Shaft for mounting between motor and reducer
- Additional options include Output Drive Unit and Mounting Foot for application flexibility

Order Brake, Output Unit, Adapter Shaft, Torque Arm and Mounting Foot separately

Model SE, Spring Engaged Brakes

Brake Model	Product Number	MAX Speed (RPM)	Bore (In)	HPt	Inertia Lb • In^2	MIN Disengagement Air Pressure	Shipping Wt. (Lbs)
SE-100	805900	1800	0.625	0.1	1.320	40 PSI	14
SE-200	806000	1800	0.875	0.1	1.280	50 PSI	14
SE-500	808200	1800	1.125	0.2	7.410	30 PSI	28
SE-1000	808300	1800	1.375	0.2	6.820	40 PSI	28

Output Drive Units

For Brake Model	Product Number	Shaft Diameter	Inertia Lb • In^2	Shipping Wt. (Lbs)
SE-100	932600	0.625	0.043	8
SE-200	932700	0.875	0.086	8
SE-500	933000	1.125	0.600	14
SE-1000	933100	1.375	0.907	15

Adapter Shaft

For Brake Model	Product Number	Shaft Diameter	Inertia Lb • In^2	Shipping Wt. (Lbs)
SE-100	805700	0.625	0.012	1
SE-200	805800	0.875	0.048	1
SE-500	812500	1.125	0.234	2
SE-1000	812600	1.375	0.542	2

Torque Arm

For Brake Model	Product Number	Shipping Wt. (Lbs)
SE-100	932900	1
SE-200	932900	1
SE-500	933200	2
SE-1000	933200	2

NEMA Motor Frame Selection Chart:

Brake Model	Fits Motor Frame Size
SE-100	56C
SE-200	143TC, 145TC, 182C, 184C
SE-500	213C, 214C, 182TC, 184TC
SE-1000	213TC, 215TC, 254UC, 256U

Mounting Foot

For Brake Model	Product Number	Shipping Wt. (Lbs)
SE-100	883000	8
SE-200	883000	8

Operating Specifications

For Brake Model	Torque (In Lbs)
SE-100	100
SE-200	225
SE-500	575
SE-1000	1150

SE Spring Engaged Brake on Thru-Shaft

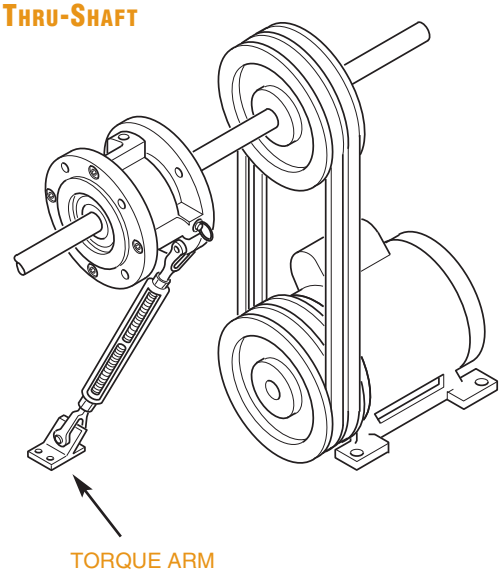

SE Spring Engaged Brake on Double Shaft Motor

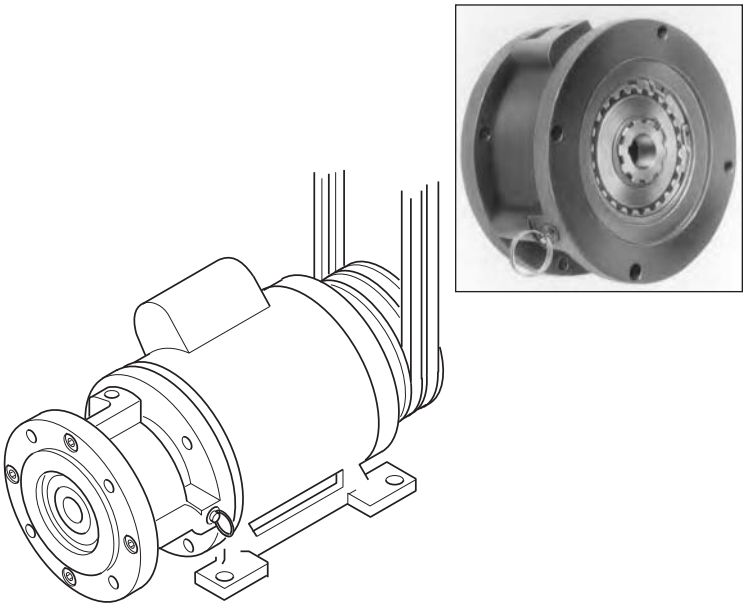

SE Spring Engaged Brake with Output Drive Unit & " L" Mounting Foot

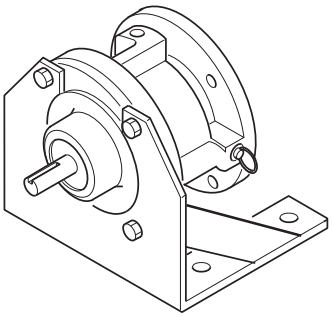

"L" mounting foot Product Number 883000 for Models SE-100 & SE-200 only. For component dimensions, see page 125.

SE Spring Engaged Brake with Gear Reducer and Single Shaft Motor

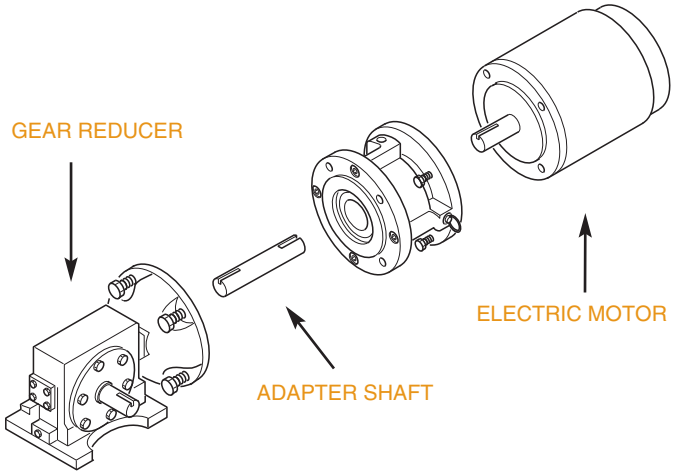

SE MODEL SPRING ENGAGED BRAKES- APPROXIMATE DIMENSIONS (INCHES)

Brake

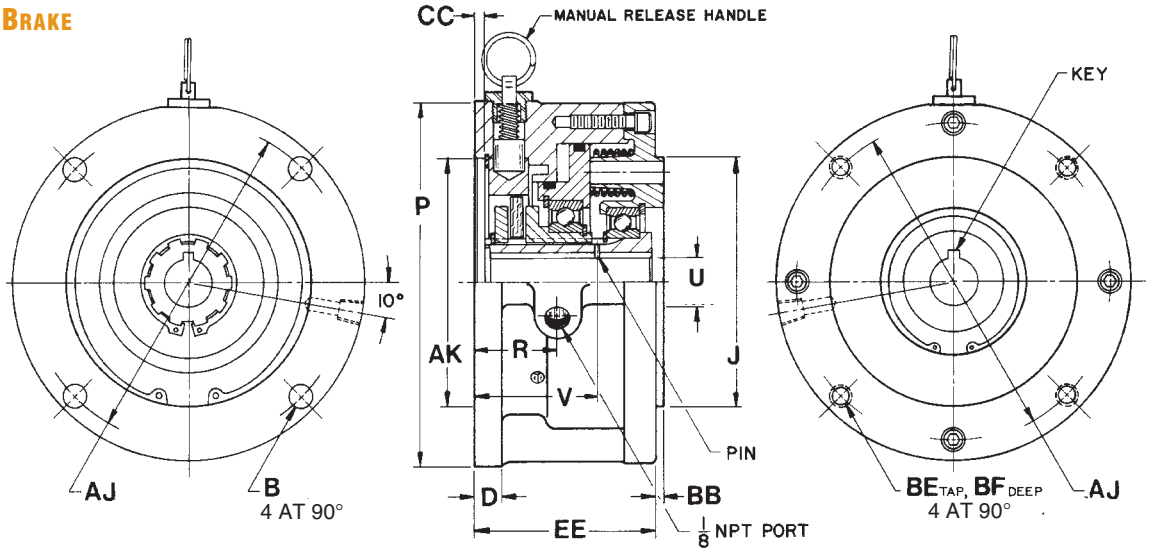

MODEL	PRODUCT NUMBER	AJ	AK +.001 -.000	B	BB	BE	BF	CC	D	EE	J +.001 -.000	P	R	V	KEY	PIN	U +.001 -.000
SE-100	805900	5.875	4.501	0.406	0.156	0.375-16	0.56	0.18	0.50	3.28	4.499	6.50	1.47	2.25	0.188 x 1.375	0.063	0.625
SE-200	806000	5.875	4.501	0.406	0.156	0.375-16	0.56	0.18	0.50	3.28	4.499	6.50	1.47	2.25	0.188 x 1.375	0.063	0.875
SE-500	808200	7.250	8.502	0.531	--	0.500-13	0.75	0.22	0.62	5.97	8.498	9.00	3.75	3.00	1.750 x 0.250	0.125	1.125
SE-1000	808300	7.250	8.502	0.531	--	0.500-13	0.75	0.22	0.62	5.97	8.498	9.00	3.75	3.50	0.312 x 2.250	0.125	1.375

Output Drive Unit

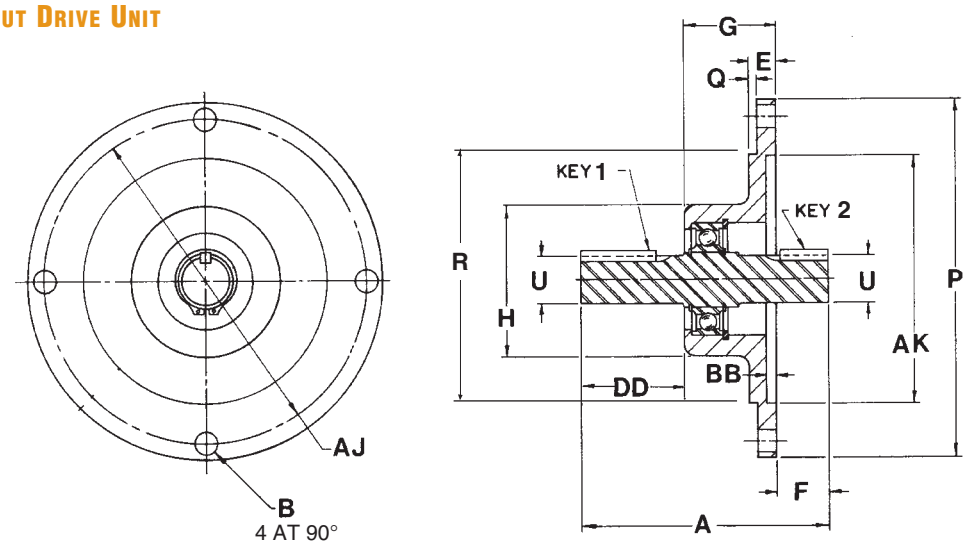

MODEL	PRODUCT NUMBER	A	AJ	AK +.001 -.000	B	BB	DD	E	F	G	H	P	Q	R +.001 -.000	U +.001 -.000	KEY1	KEY2
SE-100	932600	4.53	5.875	4.50	0.406	0.19	1.875	0.50	0.97	1.69	2.75	6.50	0.156	4.499	0.625	0.188 x 1.375	0.188 x 0.875
SE-200	932700	4.53	5.875	4.50	0.406	0.19	1.875	0.50	0.97	1.69	2.75	6.50	0.156	4.499	0.875	0.188 x 1.375	0.188 x 0.875
SE-500	933000	7.41	7.250	8.50	0.53	0.22	2.625	0.69	2.44	2.38	3.75	9.00	--	--	1.125	1.750 x 0.250	1.750 x 0.250
SE-1000	933100	7.62	7.250	8.50	0.53	0.22	3.125	0.69	2.12	2.38	3.75	9.00	--	--	1.375	0.312 x 2.00	0.312 x 2.00

SE MODEL SPRING ENGAGED BRAKES- APPROXIMATE DIMENSIONS (INCHES)

Adapter Shaft

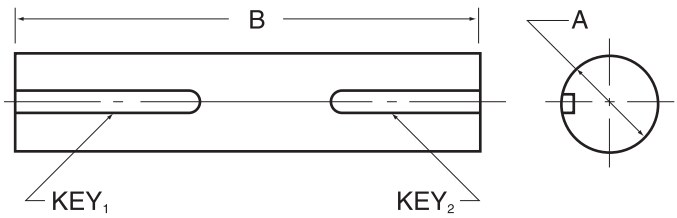

MODEL	PRODUCT NUMBER	A +.001 +.000	B	Key 1	Key 2
SE-100	805700	0.625	3.00	0.188 sq x 1.375	0.188 sq x 0.875
SE-200	805800	0.875	3.00	0.188 sq x 1.375	0.188 sq x 0.875
SE-500	812500	1.125	5.25	0.250 sq x 1.750	0.250 sq x 1.750
SE-1000	812600	1.375	5.47	0.313 sq x 2.000	0.313 sq x 2.000

SE Spring Engaged Brake with Output Drive Unit & " L" Mounting Foot

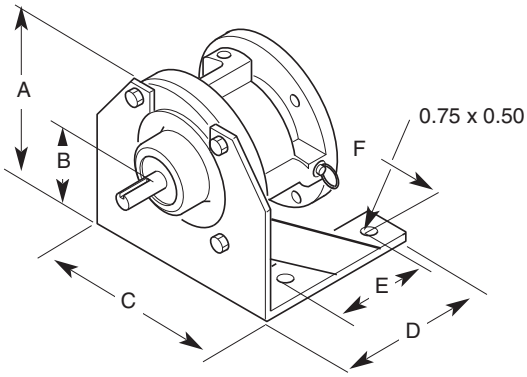

MODEL	PRODUCT NUMBER	A	B	C	D	E	F
SE-100	883000	7.00	4.50	8.19	7.00	5.25	6.50
SE-200	883000	7.00	4.50	8.19	7.00	5.25	6.50

Torque Arm

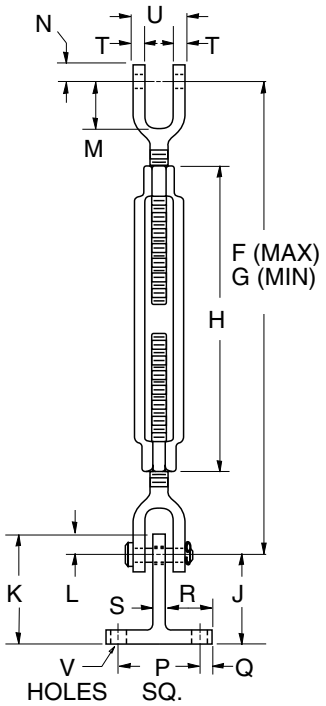

For Models SE-100 & SE-200

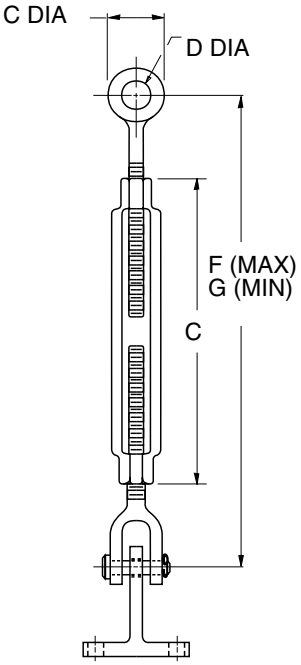

For Models SE-500 & SE-1000

MODEL	PRODUCT NUMBER	A	B	C	D	E	F	G	H	J	K	L	M	N	P	Q	R	S	T	U	V
SE-100	932900	--	--	--	--	--	12.62	8.62	5.56	1.62	2.00	0.38	0.88	0.31	1.50	0.25	0.88	0.25	0.22	0.50	0.313
SE-200	932900	--	--	--	--	--	12.62	8.62	5.56	1.62	2.00	0.38	0.88	0.31	1.50	0.25	0.88	0.25	0.22	0.50	0.313
SE-500	933200	14.38	10.38	7.12	0.531	1.25	14.38	10.38	--	1.62	2.00	0.38	--	--	1.50	0.25	0.88	0.25	--	--	0.313
SE-1000	933200	14.38	10.38	7.12	0.531	1.25	14.38	10.38	--	1.62	2.00	0.38	--	--	1.50	0.25	0.88	0.25	--	--	0.313

MB MODEL SPRING SET BRAKES

These Spring Set Brakes provide high torque in a compact unit:

- Static Torque capacity up to 1800 In. Lbs.
- Maximum Operating Speed up to 3600 rpm
- **Bore sizes** up to 1.875 inches
- Thermal Horsepower rating up to 0.450
- Designed to mount directly to NEMA "C" faced double shafted electric motors

CANNOT BE VERTICALLY MOUNTED

Order Brake and Hub separately

Model MB, Spring Set Brakes

Brake Model	Product Number	MAX Speed (RPM)	HPt	Inertia Lb • In^2	Disengagement Air Pressure	MIN Shipping Wt. (Lbs)
MB450S	801300	3600	0.18	0.039	65 PSI	15
MB600S	801305	3600	0.33	0.216	65 PSI	27
MB800S	801310	1800	0.45	0.677	65 PSI	30

MB450S Hub Options

Product Number	Bore (In)	Key Size (SQ)	Set Screw 3 AT 120°	Shipping Wt. (Lbs)
801320	0.500	None	None	2
801321	0.500	0.125	.190-32	2
801322	0.625	0.188	.190-32	2
801323	0.750	0.188	.190-32	2
801324	0.875	0.188	.190-32	2

MB600S Hub Options

Product Number	Bore (In)	Key Size (SQ)	Set Screw 3 AT 120°	Shipping Wt. (Lbs)
801330	0.875	None	None	4
801331	0.875	0.188	.190-32	4
801332	1.000	0.250	.312-18	4
801333	1.125	0.250	.312-18	4
801334	1.250	0.250	.312-18	4
801335	1.375	0.312	.375-24	4
801336	1.500	0.375	.375-24	4
801337	1.625	0.375	.375-24	3

MB800S Hub Options

Product Number	Bore (In)	Key Size (SQ)	Set Screw 3 Req'd	Shipping Wt. (Lbs)
801340	1.375	None	None	3
801341	1.375	0.312	.375-16	6
801342	1.500	0.375	.375-16	6
801343	1.625	0.375	.375-16	6
801344	1.750	0.375	.375-16	5
801345	1.875	0.500	.375-16	5

Torque

Model	TORQUE (In Lbs) New Lining	TORQUE (In Lbs) Worn Lining
MB450S	450	300
MB600S	1600	1100
MB800S	2600	1800

MB MODEL SPRING SET BRAKES - APPROXIMATE DIMENSIONS (INCHES)

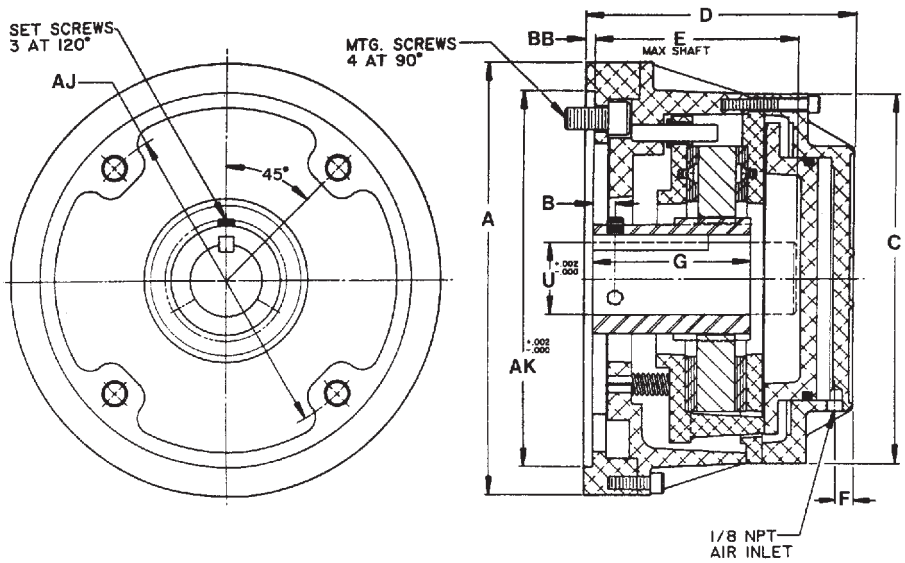

MODEL	PRODUCT NUMBER	A	AJ	AK $^{+.002}_{-.000}$	B	BB	C	D	E	F	G	MTG. SCREWS	U $^{+.002}_{-.000}$
MB450S	801300	7.75	5.875	4.501	0.25	0.156	6.50	5.23	3.75	0.39	2.69	.375-16	See Hub Option
MB600S	801305	9.81	7.250	8.501	0.50	0.218	8.38	6.18	4.62	0.42	3.63	.500-13	opposite page
MB800S	801310	12.25	9.000	10.501	0.50	0.218	10.81	6.88	5.19	0.43	3.88	.500-13	

NEMA Frame Selection Chart

Model	Frame Size
MB450S	56, 143T, 145T,
MB600S	182T, 184T, 213, 215, 213T, 215T, 254U, 256T, 256U, 254
MB800S	284U, 284T, 286U, 286T

SINGLE PUCK BRAKES

These light duty drag brakes are perfect for custom applications where space is limited and which do not require a full caliper:

Models 625 & 1000

- **2 Piston** sizes
- "O" ring sealed, simple design for light duty tension control applications

TC Models

- **3 coefficients** of friction facings
- Diaphragm actuated, spring returned brake for tension control or low cyclic duty applications

Single Puck Brakes

Model	Product Number	Torque Factor (f) 80 PSI	Shipping WT. (oz.)
625 Brake*	837100	7	4
1000 Brake	837000	17	7
TC-L (LOCO)	835131	40	28
TC-S (Standard)	835132	70	28
TC-H (HICO)	835133	90	28

*625 Air Hose must be ordered separately; Product Number 857000

TC Caliper Brakes Disc Diameter/Working Radius

Calculated Torque (T) = fR (Working Radius)

Disc Diameter	6	8	10	12	14	16
Working Radius (R)	2.500	3.500	4.000	4.500	5.500	6.500

Torque Vs. Air Pressure

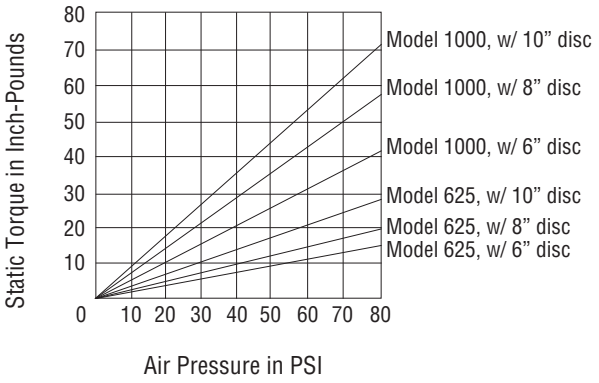

NOTE: Dynamic torque is approximately 85% of static torque.

SINGLE PUCK BRAKES - APPROXIMATE DIMENSIONS (INCHES)

Single Puck Caliper Brakes

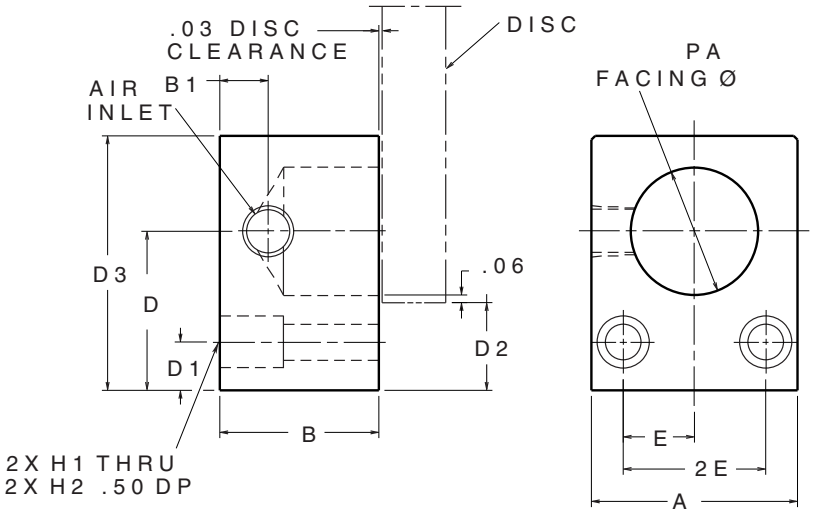

MODEL	PRODUCT NUMBER	A	B	B1	D	D1	D2	D3	E	2E	H1	H2	PA	AIR INLET
625	837100	1.25	1.00	0.25	1.00	0.31	0.63	1.50	0.31	0.62	0.22	0.34	0.62	.190-32 UNC
1000	837000	1.62	1.25	0.38	1.25	0.38	0.69	2.00	0.56	1.12	0.28	0.41	1.00	.125-27 NPT

TC Caliper Brakes

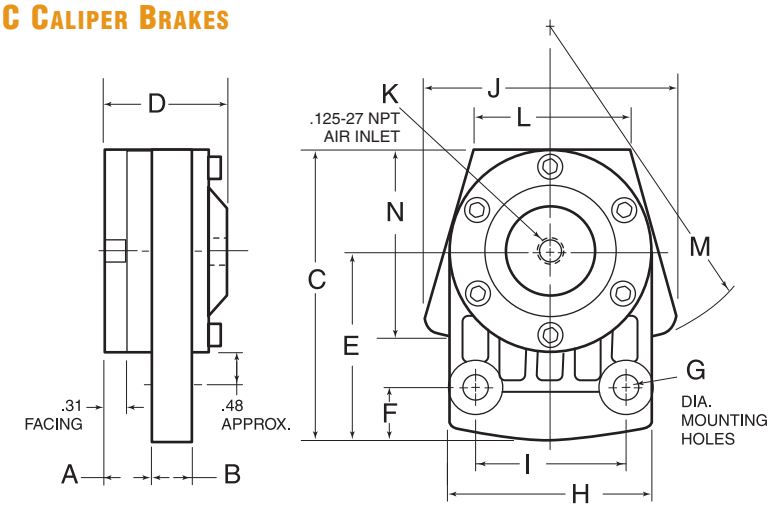

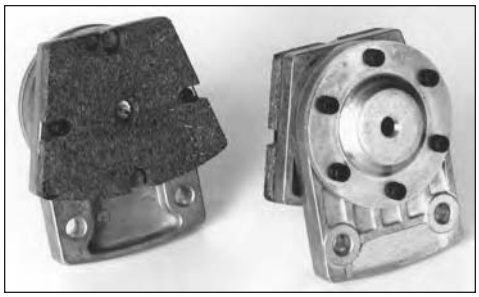

PRODUCT NUMBER	A	B	C	D	E	F	G	H	I	J	K	L	M	N
835131	.56	.69	4.13	1.70	2.69	.77	.34	2.88	2.13	3.63	.13 NPT	2.25	4.94	2.88
835132	.56	.69	4.13	1.70	2.69	.77	.34	2.88	2.13	3.63	.13 NPT	2.25	4.94	2.88
835133	.56	.69	4.13	1.70	2.69	.77	.34	2.88	2.13	3.63	.13 NPT	2.25	4.94	2.88

DB MODEL DISC CALIPER BRAKES

The design of this brake offers many features not found in other brakes of this type:

- Static Torque capacity up to 1040 In. Lbs. @ 80 psi w/16" Disk
- Brake Torque may be doubled or tripled by adding brake calipers
- Air Actuated DB brake ans spring engaged DBSE brake
- Arc contoured shoe provides large friction area, for greater facing life and stability
- Easily mounted in any position with T Bracket
- Disc Speeds up to 4500 rpm
- Disc Hubs use **QD Bushing** "SK" for shaft sizes from 0.5 to 2.125 inches/Standard Keyway.
- Spring return eliminates disc drag when disengaged
- Optional Air Hose Assembly comes with required fittings and hose for both air inlets

The Disc, Hub and Air Hose must be ordered separately. QD Bushing is customer furnished. Optional discs available from 10" to 16" diameter.

DB Model, Disc Caliper Brakes

Component	Product Number	MAX Bore (In)	Torque Factor (f)	Shipping Wt. (Lbs)
DB Brake w/ T Bracket	835000	2.500	144	8
DB Brake w/o T Bracket	835071	2.500	144	8
DBSE Brake w/t Bracket	835030	2.500	181	15
Air Hose Assembly	835400	—	—	1

Air Hose must be ordered separately.
Calculated torque (T) = fR (Working Radius)

Disc & Hub Options

The matching Hub is listed below each Disc.

Component	Product Number	Speed Up to (RPM)	Inertia Value (Lbs • in ^{2})	*Thermal Horsepower	Shipping Wt. (Lbs)	Working Radius (R)
Disc, 10 Inch	855500	4500	50.00	0.650	3	4.25
Hub, 10 Inch	856100		16.70		4	4.25
Disc, 12 Inch	855600	3800	104.00	0.950	5	5.25
Hub, 12 Inch	856200		27.90		5	5.25
Disc, 14 Inch	855700	3200	191.00	1.430	7	6.25
Hub, 14 Inch	856200		27.90		5	6.25
Disc, 16 Inch	855800	2800	316.00	2.930	9	7.25
Hub, 16 inch	856300		88.40		10	7.25

Discs and Hubs must be ordered separately.

* Continuous thermal dissipation at 450 RPM and ambient temperature 80°F. Minimize operation above 450°F for maximum friction facing wear life.

QD Mounting Bushings

Quick Detachable "QD" Bushings are customer furnished. Bushings fit into the bore of the disc, changing the bore to the size indicated.

Caution: QD Bushings must be capable of carrying the torque produced by the brake. Check with the QD Bushing manufacturer for bushing for torque ratings.

DB Model

DBSE Model

Torque Vs. Air Pressure

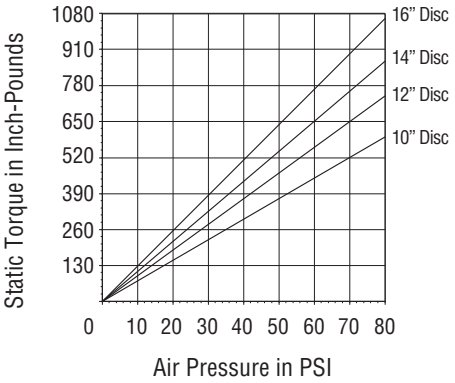

NOTE: Dynamic torque is approximately 85% of static torque.

Torque Vs. Air Pressure

Disk Diameter	mm	254.0	304.8	355.6	405.4
	in	[10.0]	[12.0]	[14.0]	[15.0]
Torque (Static)	Nm	79	98	166	136
	in /lbs	[700]	[866]	[1,032]	[1200]
Release Pressure	Bar	2.8	2.8	2.8	2.8
	PSI	40	40	40	40

DB MODEL DISC CALIPER BRAKES - APPROXIMATE DIMENSIONS (INCHES)

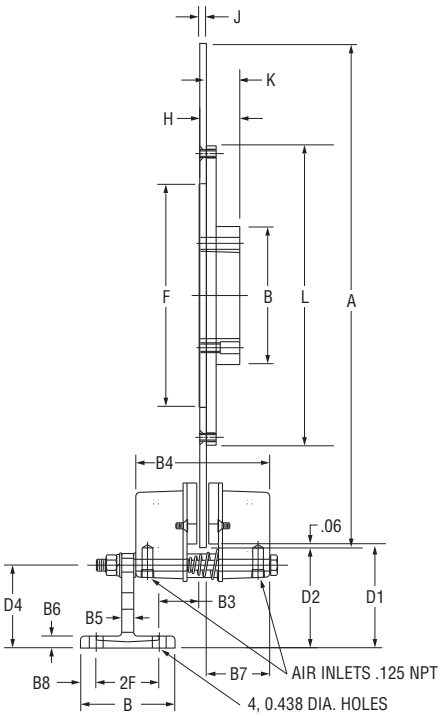

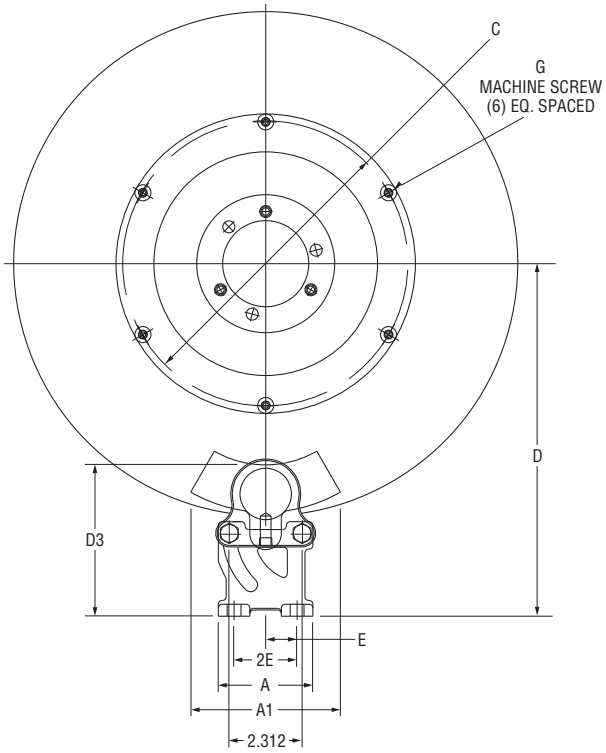

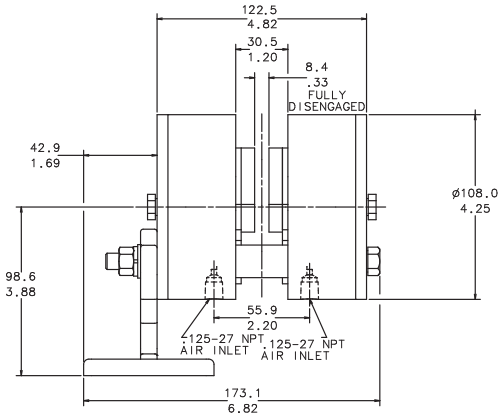

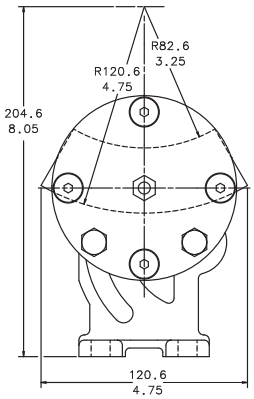

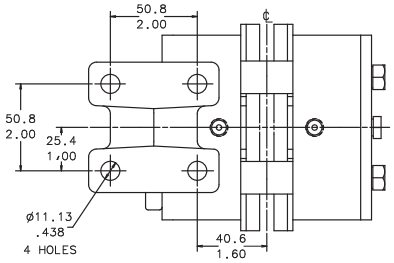

DISC (INCHES)	A	B	C	D	F	G	H	J	K	L
10	10.00	4.38	5.50	8.188	4.500	.150-24 x .38	1.25	.23	.75	6.0
12	12.00	4.38	6.50	9.188	5.500	.250-20 x .50	1.25	.23	.75	7.0
14	14.00	4.38	6.50	10.188	5.500	.250-20 x .50	1.25	.23	.75	7.0
16	16.00	4.38	9.00	11.188	7.093	.250-20 x .50	1.25	.23	.75	9.5

BRAKE (INCHES)	A	2E	E	D1	D2	D3	D4	B	2F	B3	A1	B4	B5	B6	B7	B8
10	3.00	2.00	1.00	3.19	3.25	4.80	2.62	3.00	2.00	1.27	4.75	4.25	0.38	.38	1.93	0.50
12	3.00	2.00	1.00	3.19	3.25	4.80	2.62	3.00	2.00	1.27	4.75	4.25	0.38	.38	1.93	0.50
14	3.00	2.00	1.00	3.19	3.25	4.80	2.62	3.00	2.00	1.27	4.75	4.25	0.38	.38	1.93	0.50
16	3.00	2.00	1.00	3.19	3.25	4.80	2.62	3.00	2.00	1.27	4.75	4.25	0.38	.38	1.93	0.50

BC MODEL AIR ACTUATED CALIPER BRAKES

BC Model Caliper Brakes provide:

- Static Torque capacity up to 8800 In. Lbs. @ 80 psi with 24 inch disc
- Air Actuated
- Caliper spacing is adjustable to fit .188 to 1.500 inch wide rotating discs and linear traveling devices
- Optional discs available from 16 to 24 inch diameter
- Disc Speeds up to 2800 rpm
- **QD Bushing** compatible, for shaft sizes up to 3.875 inches

The Disc must be ordered separately. QD Bushing is customer furnished.

BC Model, Air Actuated Caliper Brakes

Model	Product Number	Shipping Wt. (Lbs)
BC288A	835200	18
BC425A	835210	18

Disc & QD Bushing Options

Discs must be ordered separately. QD Bushings are customer furnished. For additional Disc details, see pages 174 and 175. Bushings fit into the bore of the brake disc hub, changing the bore to the size needed.

Caution: QD Bushings must be capable of carrying the torque produced by the caliper brake and disc selected. Check with the QD Bushing manufacturer for bushing torque ratings.

Torque Vs. Air Pressure

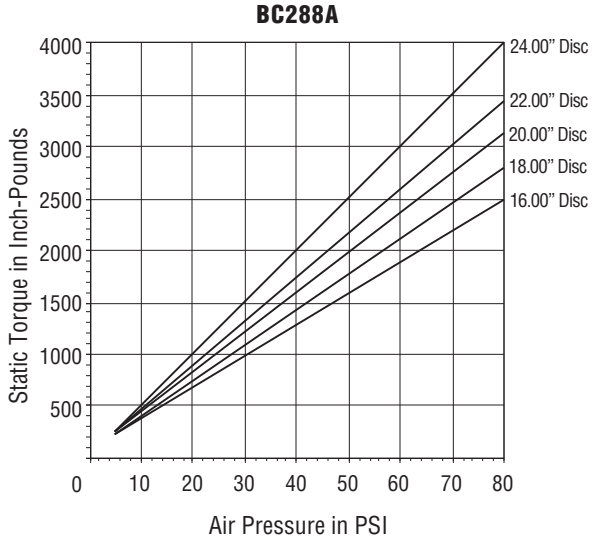

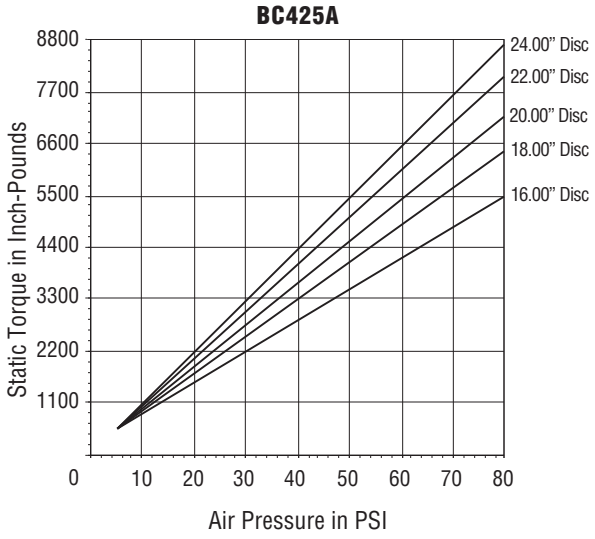

NOTE: Dynamic torque is approximately 85% of static torque.

BC MODEL AIR ACTUATED CALIPER BRAKES - APPROXIMATE DIMENSIONS (INCHES)

BC288A & BC425A

① = DISC THICKNESS + .06 (.03 GAP EA SIDE)
② HOLE LOCATION = 2 (F) + ①
③ OVERALL LENGTH = 2 (B1) + ①
④ MOUNTING SURFACE TO DISC CENTER = DISC RADIUS + D2

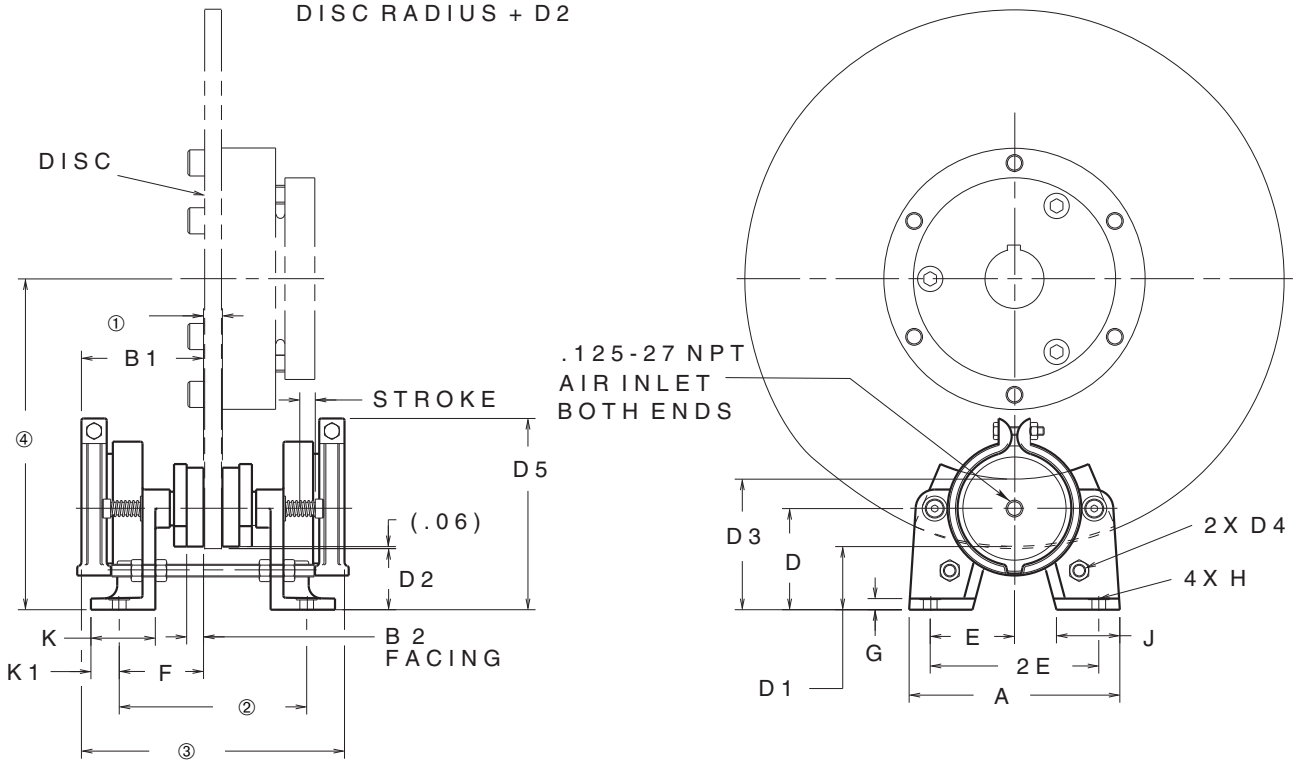

MODEL	PRODUCT NUMBER	A	B1	B2	D	D1	D2	D3	D4	D5	E	2E	F	G	H	J	K	K1	STROKE
BC288A	835200	6.25	3.62	0.50	3.00	1.87	1.81	3.87	.375-16 x 6.00	5.75	2.50	5.00	2.56	0.33	.406	1.88	1.91	0.84	0.44
BC425A	835210	8.00	3.93	0.50	3.81	2.56	2.50	4.56	.500-13 x 6.00	7.31	3.25	6.50	2.90	0.44	.531	2.03	2.32	0.94	0.38

BC MODEL SPRING ACTUATED CALIPER BRAKES

BC Model Caliper Brakes provide:

- Static Torque capacity up to 5300 In. Lbs. with 24 inch disc
- Spring Actuated
- Caliper spacing is adjustable to fit .188 to 1.500 inch wide rotating discs and linear traveling devices
- Optional discs available from 16 to 24 inch diameter
- Disc Speeds up to 2800 rpm
- **QD Bushing** compatible, for shaft sizes up to 3.875 inches
- Adjustable shoe provides greater facing life
- Spring engaged with manual release
- Facing adjustment allows full torque capacity throughout facing use

The Disc must be ordered separately. QD Bushing is customer furnished.

NOTE: Torque values for spring applied brakes will vary over the life of the brake as a function of spring force and the burnishing process of the lining. Over the life of the linings, torque values may exceed published values by up to 40%.

BC Model, Spring Actuated Caliper Brake

Model	Product Number	MIN Disengage Air Pressure	Shipping Wt. (Lbs)
BC288S	835220	87 PSI	19
BC425S	835230	83 PSI	34

Disc & QD Bushing Options

Discs must be ordered separately. QD Bushings are customer furnished. For additional Disc details, see pages 174 and 175. Bushings fit into the bore of the brake disc hub, changing the bore to the size needed.

Caution: QD Bushings must be capable of carrying the torque produced by the caliper brake and disc selected. Check with the QD Bushing manufacturer for bushing torque ratings.

Torque Vs. Air Pressure

BC288S

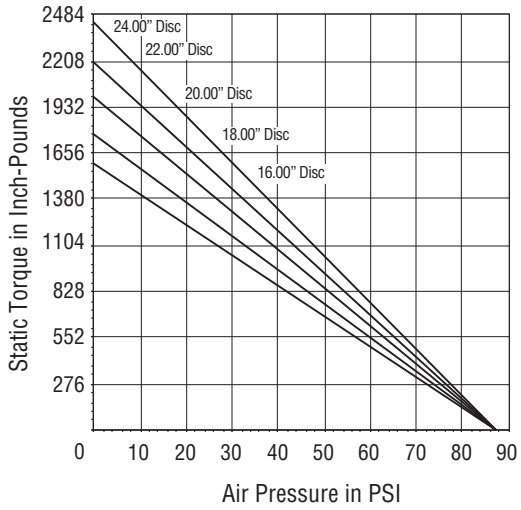

BC425S

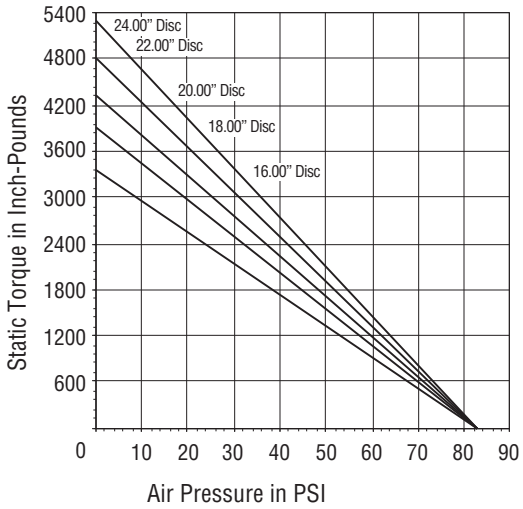

NOTE: Dynamic torque is approximately 85% of static torque.

BC MODEL SPRING ACTUATED CALIPER BRAKES - APPROXIMATE DIMENSIONS (INCHES)

BC288S & BC425S

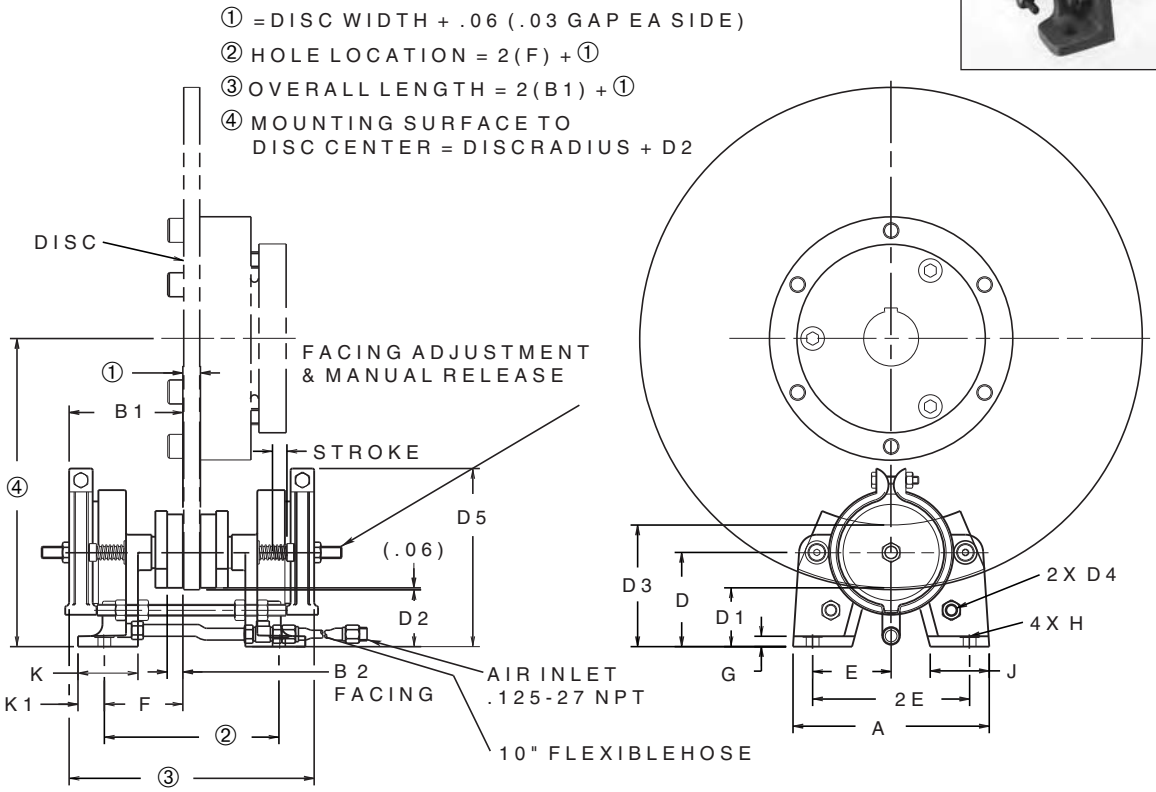

MODEL	PRODUCT NUMBER	A	B1	B2	D	D1	D2	D3	D4	D5	E	2E	F	G	H	J	K	K1	STROKE
BC288S	835220	6.25	4.50	0.50	3.00	1.87	1.81	3.87	.375-16 x 6.00	5.75	2.50	5.00	2.56	0.33	.406	1.88	1.91	0.84	0.44
BC425S	835230	8.00	5.12	0.50	3.81	2.56	2.50	4.56	.500-13 x 6.00	7.31	3.25	6.50	2.90	0.44	.531	2.03	2.32	0.94	0.38

BD MODEL AIR ACTUATED CALIPER BRAKES

BD Model Air Actuated Caliper Brakes provide:

- Static Torque capacity up to 19,000 In. Lbs. psi with 24 inch disc
- Air Actuated
- Actuators mount on either side of the brake
- Air connections can be rotated 360 degrees around actuator axis
- Multiply stopping power by installing more than one caliper brake per disc
- Shoes are mounted with detent pins for quick replacement
- Caliper spacing fits 0.500 inch wide discs
- SPC shoes fit on BD Model Caliper Brakes for longer life and higher peak input rate
- All pivot points have life-lubricated bearings
- Optional discs from 12 to 24 inch diameters
- Disc Speeds up to 3200 rpm with 14 inch discs
- **QD Bushing** compatible, for shaft sizes up to 3.875 inches

The Disc, Air Regulator and Valve must be ordered separately. QD Bushing is customer furnished.

BD Model, Air Actuated Caliper Brakes

Model	Product Number	Torque Factor	Shipping Wt. (Lbs)
BD, Air Actuated	933600	*See Torque Chart for Values by Disc Size*	35

Air Hose must be customer furnished.

Disc & QD Bushing Options

Discs must be ordered separately. QD Bushings are customer furnished. For additional Disc details, see pages 174 and 175. Bushings fit into the bore of the brake disc hub, changing the bore to the size needed.

Caution: QD Bushings must be capable of carrying the torque produced by the caliper brake and disc selected. Check with the QD Bushing manufacturer for bushing torque ratings.

NOTE: Air Regulator and Valve requirements will depend upon your application. Consult Nexen for proper specifications.

Torque Vs. Air Pressure

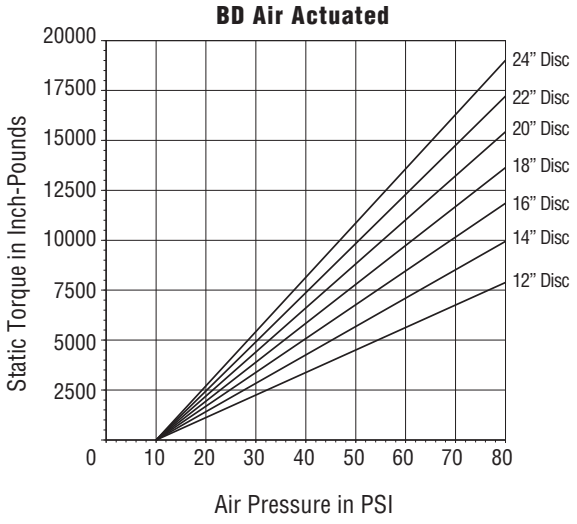

NOTE: Dynamic torque is approximately 85% of static torque.

BD MODEL AIR ACTUATED CALIPER BRAKES - APPROXIMATE DIMENSIONS (INCHES)

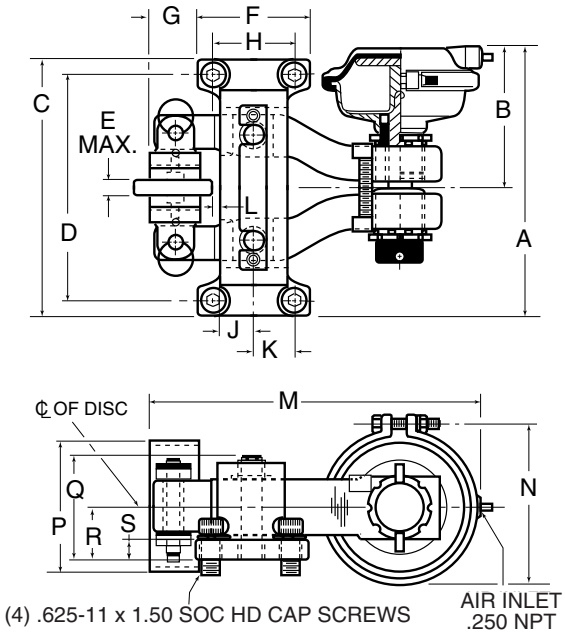

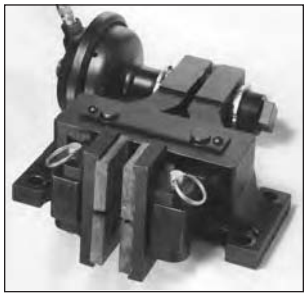

PRODUCT NUMBER	A	B*	C	D	E	F	G	H	J	K	L	M	N	P	Q	R	S
933600	9.81	5.75	9.31	8.188	0.75	4.12	1.75	3.00	1.25	1.50	0.25	12.62	5.69	4.81	3.75	1.875	0.75

*with fully worn facings. Please consult Nexen's website for current dimension information.

BD MODEL SPRING ACTUATED CALIPER BRAKES

BD Model Spring Actuated Caliper Brakes provide:

- Static Torque capacity up to 19,000 In. Lbs.
- Spring Actuated
- Actuators mount on either side of the brake
- Air connections can be rotated 360 degrees around actuator axis
- Multiply stopping power by installing more than one caliper brake per disc
- Shoes are mounted with detent pins for quick replacement
- SPC shoes fit on BD Model Caliper Brakes for longer life and higher peak input rate
- All pivot points have life-lubricated bearings
- Optional discs from 12 to 24 inch diameters
- Disc Speeds up to 3200 rpm with 14 inch discs
- **QD Bushing** compatible, for shaft sizes up to 3.875 inches

The Disc, Air Regulator and Valve must be ordered separately. QD Bushing is customer furnished.

BD Model, Spring Actuated, Air Released, Caliper Brakes

Model	Product Number	MIN Disengage Air Pressure	Shipping Wt. (Lbs)
BD, Spring Actuated, Air Released	933500	75 PSI	41

Disc & QD Bushing Options

Discs must be ordered separately. QD Bushings are customer furnished. For additional Disc details, see pages 174 and 175. Bushings fit into the bore of the brake disc hub, changing the bore to the size needed.

Caution: QD Bushings must be capable of carrying the torque produced by the caliper brake and disc selected. Check with the QD Bushing manufacturer for bushing torque ratings.

NOTE: Air Regulator and Valve requirements will depend upon your application. Consult Nexen for proper specifications.

Torque Vs. Air Pressure

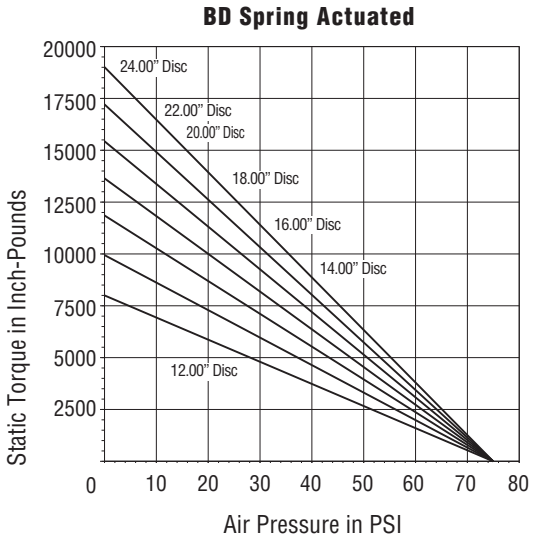

NOTE: Dynamic torque is approximately 85% of static torque.

BD Model, Spring Actuated, Hydraulic Released, Caliper Brakes

Model	Product Number	Torque Factor (f)	Maximum Pressure (PSI)	MIN Disengage Air Pressure (PSI)	Shipping Wt. (Lbs)
BD, Spring Actuated, Hydraulic Released	933700	2200 Lbs	1500	250	65
	933701	440 Lbs	1500	50	65
	933702	1500 Lbs	1500	170	65
	933703	650 Lbs	1500	75	65

Disc working radius (R) = DIA/2 -1.437, For 18" Disc and larger.
Calculated Torque = fR, Example: Product 933700 with a 24" Disc; 2200 x 10.563 = 23,000 In.Lbs.

BD MODEL SPRING ACTUATED CALIPER BRAKES - APPROXIMATE DIMENSIONS (INCHES)

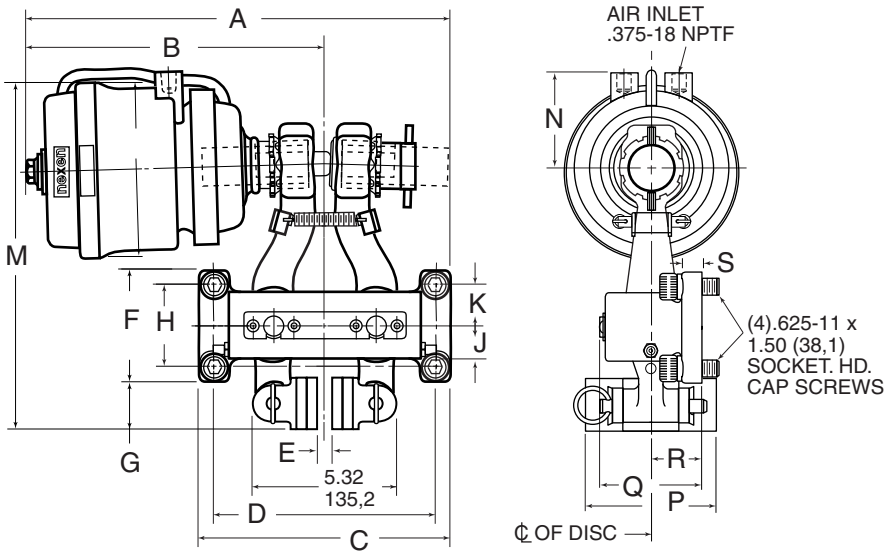

PRODUCT NUMBER	A	B*	C	D	E	F	G	H	J	K	M	N	P	Q	R	S
933500	15.64	11.00	9.31	8.188	0.75	4.12	1.75	3.00	1.25	1.50	12.94	3.51	4.81	3.75	1.875	0.75
	397,2	279,0	236,2	208,03	14,27	104,6	44,5	76,2	31,7	38,1	322,2	89,1	122,2	95,8	47,9	19,0

*with fully worn facings. Please consult Nexen's website for current dimension information.

BD MODEL SPRING ACTUATED, HYDRAULIC RELEASE CALIPER BRAKES - APPROXIMATE DIMENSIONS (INCHES)

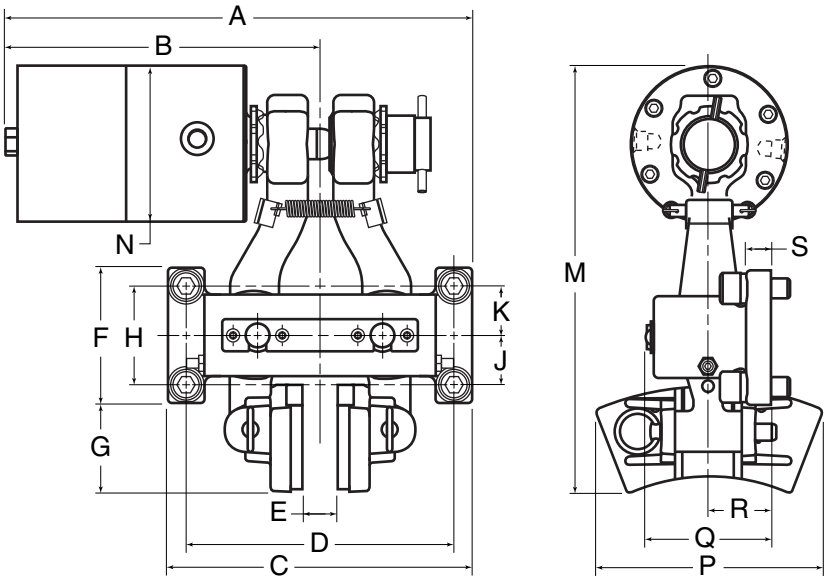

PRODUCT NUMBER	A	B	C	D	E	F	G	H	J	K	L	M	N	P	Q	R	S
933700	14.39	9.74	9.31	8.19	.911	4.12	2.69	3.00	1.25	1.50	0.25	13.03	4.76	7.00	3.77	1.88	0.75
933701	14.32	9.66	9.31	8.19	.561	4.12	2.69	3.00	1.25	1.50	0.25	13.03	4.76	7.00	3.77	1.88	0.75
933702	14.32	9.66	9.31	8.19	1.060	4.12	2.69	3.00	1.25	1.50	0.25	13.03	4.76	7.00	3.77	1.88	0.75
933703	14.32	9.66	9.31	8.19	1.060	4.12	2.69	3.00	1.25	1.50	0.25	13.03	4.76	7.00	3.77	1.88	0.75

SINGLE-POST BRAKE CALIPER VC500

Nexen's VC500 caliper brakes provide:

- Spring-actuated braking and clamping force for demanding industrial machinery
- A high torque rating 4785.9 Nm [42,350 in-lb]* that is maintained throughout the life of the friction facing
- Release pressure at 4.1 bar [60 psi]
- Spring actuated for safety
- A Long cycle life using a rear linkage design that actually increases clamping force as the facings wear
- A high performance unit compact in size to fit into tight spaces on automotive conveyor systems, large converting machines, saw mills, and many other applications.
- 80% smaller than older models
- High performance piston seal
- Optimized springs
- Time savings for maintenance managers and machine builders
- Comes fully assembled and calibrated for easy installation
- Quick-release pins on friction facing shoes reduce downtime
- Additional safety guards and redundant constraints
- Corrosion resistant paint for improved aesthetics

* Maximum static torque when burnished with a 24 inch disc.

VC500 Single-Post Brake Caliper

Specifications

Model	PRODUCT NUMBER	Static Torque*	Disc Diameters	Minimum Disengagement Pressure	Maximum Air Pressure	Shipping Weight
VC500	837450	4786 Nm [42,350 in-lb]	36–61 cm [14–24 in]	4.1 bar [60 psi]	8.3 bar [120 psi]	50 kg [110 lb]

*Maximum static torque when burnished with a 24inch disc.

VC500 Caliper Brake Torque Values
Calculated Torques Based On Torque Factor And Working Radius

Burnished Torque

PSI/in.	Disc Size mm [in.]								
	610 [24]	559 [22]	533 [21]	508 [20]	464 [18.25]	457 [18]	406 [16]	356 [14]	305 [12]
0	42350	38945	36909	34873	31309	30800	26728	22655	18583
10	36713	33237	31499	29762	26720	26286	22810	19335	15859
20	34462	31199	29568	27937	25082	24674	21412	18149	14887
30	30000	27160	25740	24320	21835	21480	18640	15799	12959
40	22587	20449	19379	18310	16439	16172	14034	11895	9757
50	11745	10633	10077	9521	8548	8409	7297	6185	5074
60	0	0	0	0	0	0	0	0	0

Unburnished Torque

PSI/in.	Disc Size mm [in.]								
	610 [24]	559 [22]	533 [21]	508 [20]	464 [18.25]	457 [18]	406 [16]	356 [14]	305 [12]
0	27235	24656	23367	22078	19822	19500	16921	14343	11765
10	22067	19978	18934	17889	16061	15800	13711	11622	9533
20	16620	15046	14260	13473	12096	11900	10326	8753	7179
30	11174	10116	9587	9058	8132	8000	6942	5885	4827
40	6285	5690	5392	5095	4574	4500	3905	3310	2715
50	1536	1390	1318	1245	1118	1100	954	809	663
60	0	0	0	0	0	0	0	0	0

VC500 SINGLE-POST BRAKE CALIPER - APPROXIMATE DIMENSIONS MM [INCHES]

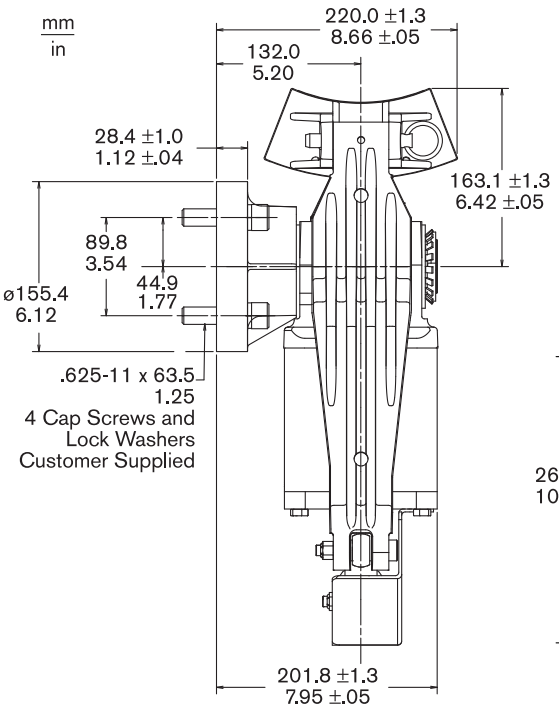

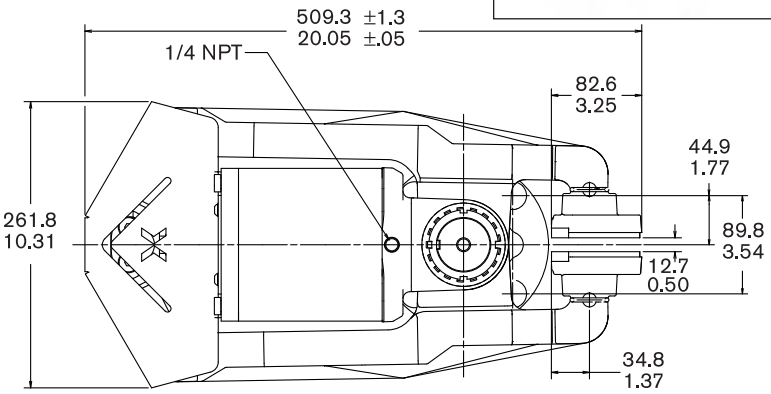

SPC MODEL AIR ACTUATED CALIPER BRAKES

SPC Single Post Caliper, Air Actuated Brake provides:

- Air Actuation
- Static Torque capability up to 50,000 In. Lbs.
- Brake actuator is moveable to permit a change in mechanical advantage which varies the torque range
- All models may be quickly and easily converted from one actuating system to another
- Arced brake shoes with quick removable pin mounting
- Pedestal style base is easily mounted in a small area
- Optional discs available from 16 to 24 inch diameter
- Disc Speeds up to 2800 rpm with 16 inch disc
- **QD Bushing** compatible, for shaft sizes up to 3.875 inches

The Brake, Actuator and Disc must be ordered separately. QD Bushing and Air Hose are customer furnished.

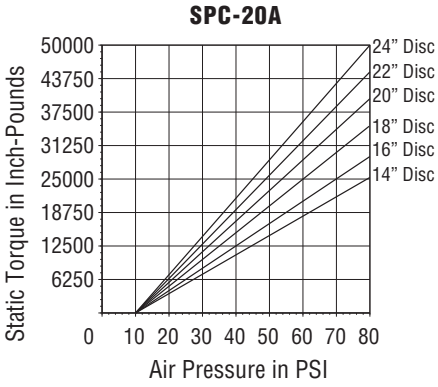

SPC Model, Single Post Air Actuated Caliper Brake

Ordering Information:
To achieve a complete brake assembly, you must order a Brake, the required number of Actuators and desired Disc. Performance values are dependent upon Actuator location, number of Actuators and Disc diameter. Determine performance required from the charts.

Model	Brake Product Number	# of Actuators Required	Actuator Product Number	Shipping Wt. (Lbs)
SPC-8A	837400	1	837500	77
SPC-12A	837400	1	837500	77
SPC-20A	837400	2	837500	83

Disc & QD Bushing Options

Discs must be ordered separately. QD Bushings are customer furnished. For additional Disc details, see pages 174 and 175. Bushings fit into the bore of the brake disc hub, changing the bore to the size needed.

Caution: QD Bushings must be capable of carrying the torque produced by the caliper brake and disc selected. Check with the QD Bushing manufacturer for bushing torque ratings.

Torque Vs. Air Pressure

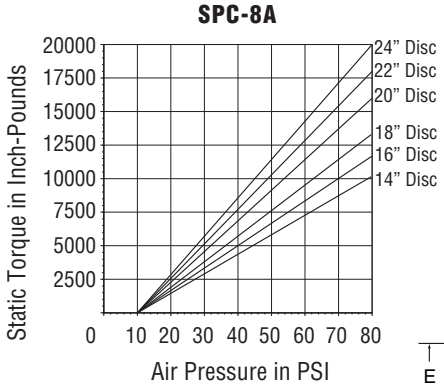

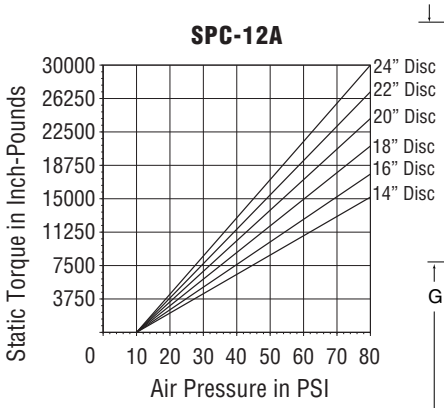

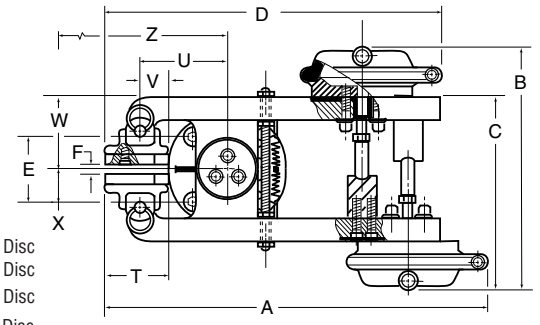

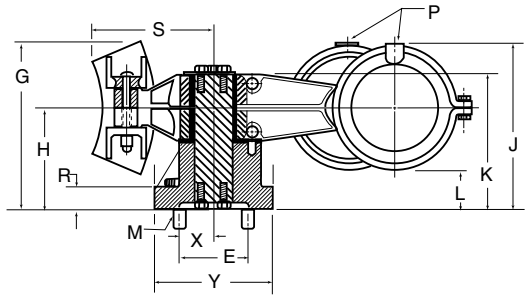

Air Actuated Dimensions

BRAKE PRODUCT NUMBER	ACTUATOR PRODUCT NUMBER	A	B①	C	D	E	F	G	H	J	K	L
837400	837500	19.69	13.81	11.31	17.31	3.53	0.56	8.44	5.19	8.50	6.88	1.94

M	P	R	S	T	U	V	W	X	Y	Z*
(4).625-11x 2.50	.375 NPT	1.12	6.31	3.17	4.50	1.38	3.62	1.77	6.12	3.00**

* disc center location **+ disc radius ① With fully worn linings

SPC MODEL SPRING ACTUATED CALIPER BRAKES

SPC Single Post Caliper Spring Actuated Caliper Brake provides:

- Spring Actuation
- Static Torque capability up to 50,000 In. Lbs.
- Brake actuator is moveable to permit a change in mechanical advantage which varies the torque range
- All Models may be quickly and easily converted from one actuating system to another
- Arced brake shoes with quick removable pin mounting
- Pedestal style base is easily mounted in a small area
- Optional discs available from 16 to 24 inch diameter
- Disc Speeds up to 2800 rpm with 16 inch disc
- **QD Bushing** compatible, for shaft sizes up to 3.875 inches

The Brake, Actuator and Disc must be ordered separately. QD Bushing and Air Hose are customer furnished.

SPC-20S

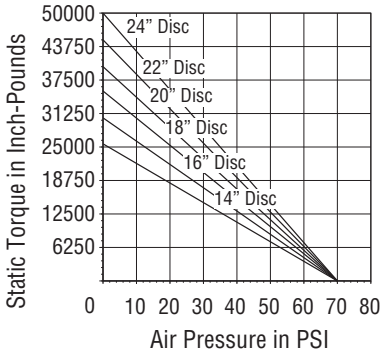

NOTE: Torque values for spring applied brakes will vary over the life of the brake as a function of spring force and the burnishing process of the lining. Over the life of the linings, torque values may exceed published values by up to 40%.

SPC Model, Single Post Spring Actuated Caliper Brake

Ordering Information:
To achieve a complete brake assembly, you must order a Brake, the required number of Actuators and desired Disc. Performance values are dependent upon Actuator location, number of Actuators and Disc diameter. Determine performance required from the charts.

Model	Brake Product Number	# of Actuators Required	Actuator Product Number	Shipping Wt. (Lbs)
SPC-8S	837400	1	837600	77
SPC-12S	837400	1	837600	77
SPC-20S	837400	2	837600	83

Disc & QD Bushing Options

Discs must be ordered separately. QD Bushings are customer furnished. For additional Disc details, see pages 174 and 175. Bushings fit into the bore of the brake disc hub, changing the bore to the size needed.

Caution: QD Bushings must be capable of carrying the torque produced by the caliper brake and disc selected. Check with the QD Bushing manufacturer for bushing torque ratings.

Torque Vs. Air Pressure

SPC-8S

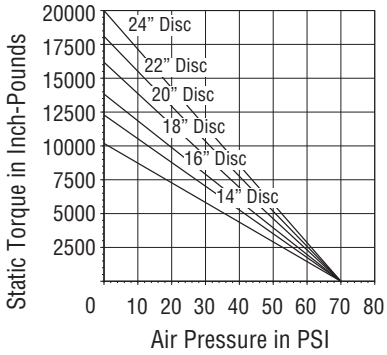

SPC-12S

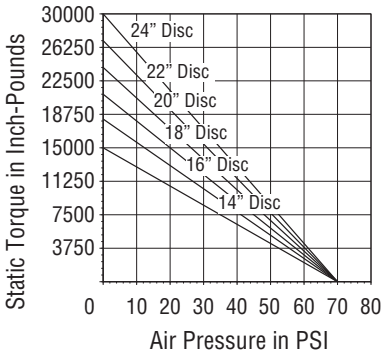

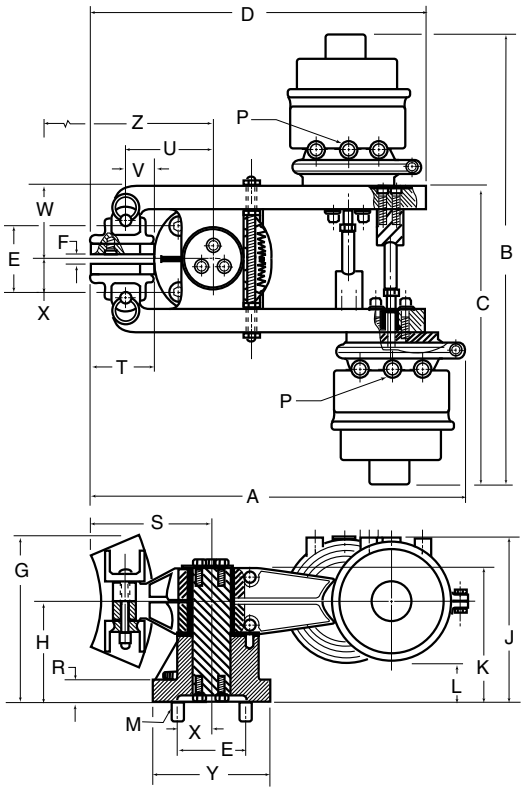

Spring Actuated Dimentions

BRAKE PRODUCT NUMBER	ACTUATOR PRODUCT NUMBER	A	B①	C	D	E	F	G	H	J	K	L
837400	837600	19.19	24.06	16.44	17.31	3.53	0.56	8.44	5.19	8.50	6.88	2.03

M	P	R	S	T	U	V	W	X	Y	Z*
(4).625-11x 2.50	.375 NPT	1.12	6.41	3.29	4.50	1.38	3.62	1.77	6.12	3.00**

* disc center location **+ disc radius ① With fully worn linings

CALIPER BRAKE DISCS

Caliper Brake Discs, Non-Ventilated

- 12 to 24 inch diameter non-ventilated discs
- Discs fit shaft sizes to 3.875 inches
- Disc torque factors and working radius vary by type of brake used (see chart at right for specifics)
- Customer supplied QD Bushings are used for shaft attachment and vary by disc (see chart at right)
- Discs must be ordered separately from the Caliper Brake

Caliper Brake Discs, Ventilated

- 18.25 to 24 inch diameter ventilated discs
- Design forces air across disc surfaces before heat sinks in
- Discs fit shaft sizes to 3.875 inches
- Thermal rating 2 to 12 Horsepower
- Disc torque factors and working radius vary by type of brake used (see chart at right for specifics)
- Customer supplied QD Bushings are used for shaft attachment and vary by disc (see charts at right)
- Discs must be ordered separately from the Caliper Brake

QD Bushings

- Quick Detach "QD" Bushings are customer furnished
- Bushings should be used with specific disc (see charts at right)

CAUTION: QD Bushings must be capable of carrying the torque produced by the brake. Check with the QD Bushing manufacturer for bushing torque ratings.

Caliper Brake Discs, Non-Ventilated

Disc Diameter	Product Number	Speed Up to (RPM)	Heat Sink Capacity (Ft. Lbs)	Inertia-WK^2 (Lbs • Ft^2)	Shipping Wt. (Lbs)
12.00 Inch	934201	3800	265,000	1.91	24
14.00 Inch	934202	3200	320,800	3.51	45
16.00 Inch	934203	2800	376,600	5.96	59
18.00 Inch	934204	2500	432,400	9.96	81
20.00 Inch	934205	2200	529,400	14.93	93
22.00 Inch	934206	2000	636,100	22.06	106
24.00 Inch	934207	1900	703,000	30.86	122

Caliper Brake Discs, Ventilated

Disc Diameter	Product Number	Speed Up to (RPM)	Heat Sink Capacity (Ft. Lbs)	Inertia-WK^2 (Lbs • Ft^2)	Shipping Wt. (Lbs)
18.25 Inch	934200	1500	1,500,000	15.97	75
21.00 Inch	934300	1300	2,100,000	24.28	90
24.00 Inch	934400	1100	2,700,000	42.79	110

Caliper Brake Discs, Non-Ventilated

Disc Diameter Type	Compatible QD Bushing	QD Bushing Bore Range	Keyway
12.00 Inch	SF	0.500 - 2.312	Standard
14.00 Inch	E	0.875 - 2.875	Standard
16.00 Inch	E	0.875 - 2.875	Standard
18.00 Inch	J	1.500 - 3.875	Standard
20.00 Inch	J	1.500 - 3.875	Standard
22.00 Inch	J	1.500 - 3.875	Standard
24.00 Inch	J	1.500 - 3.875	Standard

Caliper Brake Discs, Ventilated

Disc Diameter Type	Compatible QD Bushing	QD Bushing Bore Range	Keyway
18.25 Inch	J	1.500 - 3.875	Standard
21.00 Inch	J	1.500 - 3.875	Standard
24.00 Inch	J	1.500 - 3.875	Standard

Disc Torque Capacity & Working Radius by Brake Style

Brake Model	Torque Factor (f)	Disc Diameter: 12"	14"	16"	18"	20"	22"	24"
		Working Radius of Disc in Inches (R)						
BC288 (Air)	365	--	--	6.938	7.938	8.938	9.938	10.938
BC425 (Air)	800	--	--	6.938	7.938	8.938	9.938	10.938
BC288 (Spring)	224	--	--	6.938	7.938	8.938	9.938	10.938
BC425 (Spring)	485	--	--	6.938	7.938	8.938	9.938	10.938
BD	1790	4.475	5.562	6.625	7.625	8.625	9.625	10.625
SPC8	1900	4.203	5.375	6.500	7.563	8.563	9.563	10.563
SPC12	2800	4.203	5.375	6.500	7.563	8.563	9.563	10.563
VC500	4072	4.203	5.375	6.500	7.563	8.563	9.563	10.563
SPC20	4700	4.203	5.375	6.500	7.563	8.563	9.563	10.563

Calculated torque = fR

CALIPER BRAKE DISCS - APPROXIMATE DIMENSIONS (INCHES)

Non-Ventilated Discs

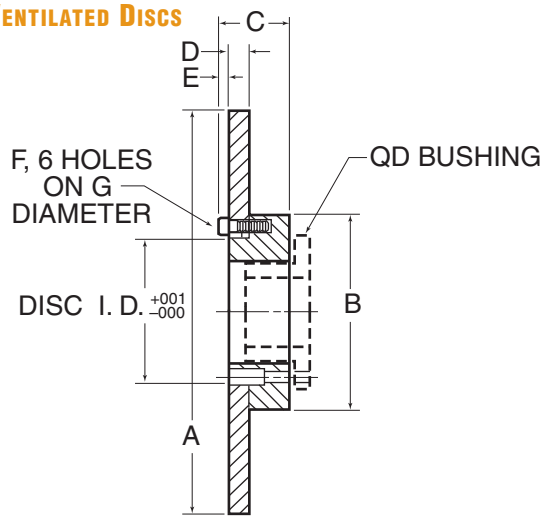

DISC WITH HUB PRODUCT NUMBER	A DISC DIA	B	C	D	E	QD BUSHING	MAX* BORE	DISC W/O HUB PRODUCT NUMBER	I.D.	F	G
934201	12.00	5.70	2.12	0.50	0.38	SF	2.312	934219	4.438	.34	5.094
934202	14.00	7.75	2.62	0.50	0.50	E	2.875	934220	5.750	.56	6.875
934203	16.00	7.75	2.62	0.50	0.50	E	2.875	934221	5.750	.56	6.875
934204	18.00	9.75	4.31	0.50	0.62	J	3.875	934222	7.250	.69	8.500
934205	20.00	9.75	4.31	0.50	0.62	J	3.875	934223	7.250	.69	8.500
934206	22.00	9.75	4.31	0.50	0.62	J	3.875	934224	7.250	.69	8.500
934207	24.00	9.75	4.31	0.50	0.62	J	3.875	934225	7.250	.69	8.500

*With std. keyway

Ventilated Discs

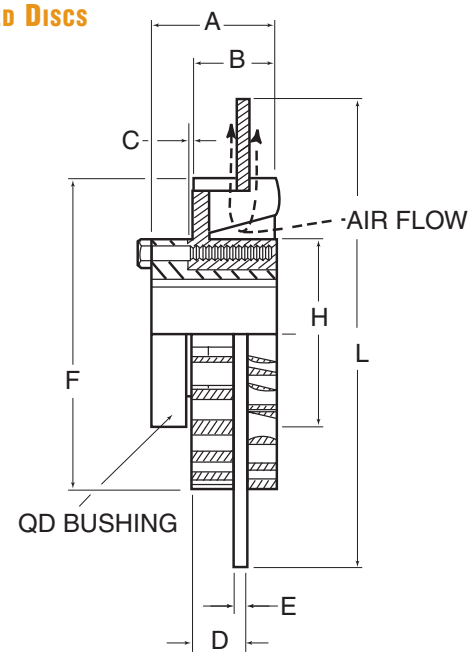

PRODUCT NUMBER	DISC DIA	A	B	C	D	E	F	H	QD BUSHING	MAX* BORE
934200	18.25	4.75	3.19	0.19	2.25	0.50	12.00	7.50	J	3.875
934300	21.00	4.75	3.19	0.19	2.25	0.50	12.00	7.50	J	3.875
934400	24.00	4.75	3.19	0.19	2.25	0.50	12.00	7.50	J	3.875

*With std. keyway

Heat Dissipation - Ventilated Discs

18.25" Disc

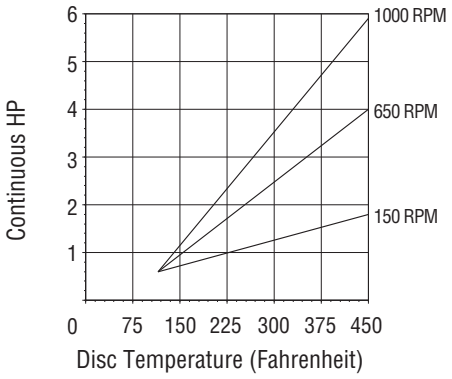

21.00" Disc

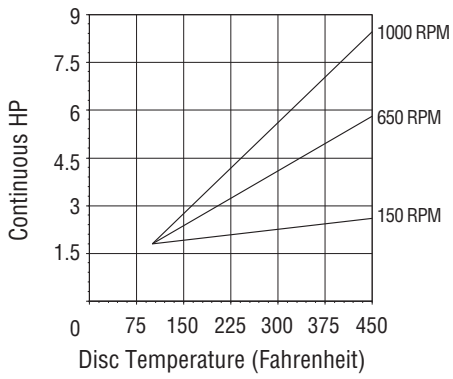

24.00" Disc

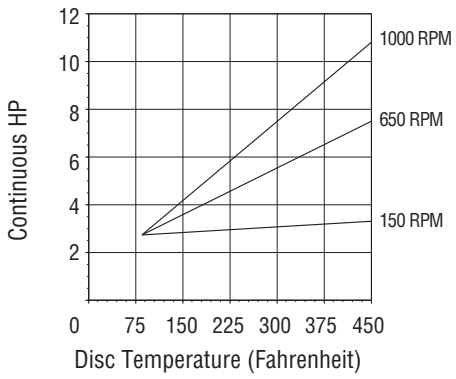

Note: For maximum wear life of friction facings, operation above 450° F with standard facings should be minimized.

MODEL J & K DRUM BRAKES

These Drum Brakes provide accurate tension control, light duty stopping, holding or continuous braking:

- Static Torque capacity up to 1200 In. Lbs. @ 80 psi
- Thermal Horsepower rating up to 0.500
- Air Actuated for accurate, economical operation
- Long wearing friction linings
- **2 Drums** for each Model, either with standard bore or no bore for customization
- Mounts directly on **shaft** or on a **self-centering mounting bracket**

Order Brake, Drum and Bracket separately for application convenience.

Model J Drum Brakes

Component	Product Number	HP_t	Inertia Lb • In^2	Shipping Wt. (Lbs)	Speeds up to RPM
Model J Brake only	841600	0.200		3	
Drum, No Bore	842000		2.160	2	5500
Drum, Bored	842300		2.160	2	5500
Bracket, Self-centering	842100			2	

Model K Drum Brakes

Component	Product Number	HP_t	Inertia Lb • In^2	Shipping Wt.. (Lbs)	Speeds up to RPM
Model K Brake only	843200	0.500		6	
Drum, No Bore	843600		9.790	6	5500
Drum, Bored	844000		9.790	6	5500
Bracket, Self-centering	843700			4	

Torque Vs. Air Pressure

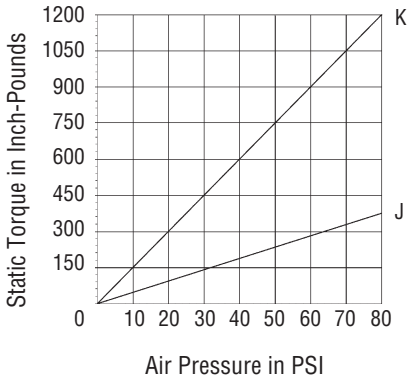

NOTE: Dynamic torque is approximately 85% of static torque.

MODEL J & K DRUM BRAKES - APPROXIMATE DIMENSIONS (INCHES)

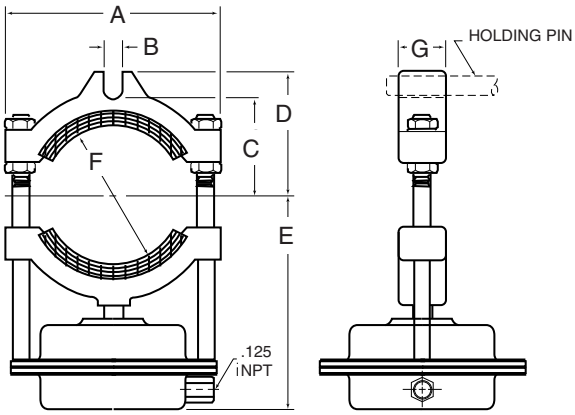

MODEL	PRODUCT NUMBER	A	B	C	D	E	F	G
J	841600	4.00	0.38	1.88	2.38	4.12	2.75	0.88
K	843200	5.25	0.62	2.62	3.38	5.71	4.00	1.25

Brake Drum

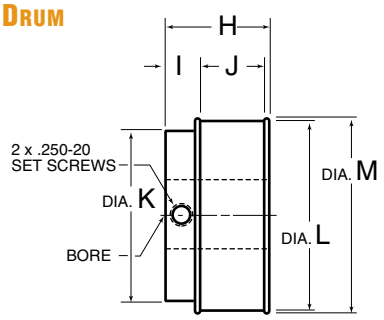

MODEL	PRODUCT NUMBER	H	I	J	K	L	M	BORE $^{+.001}_{-.000}$
J	842000	1.50	0.50	0.94	2.50	2.75	2.88	NONE, 2.000 MAX
J	842300	1.50	0.50	0.94	2.50	2.75	2.88	1.000
K	844000	2.12	0.62	1.38	2.62	4.00	4.12	1.000
K	843600	2.12	0.62	1.38	2.62	4.00	4.12	NONE, 2.000 MAX

Self-Centering Bracket

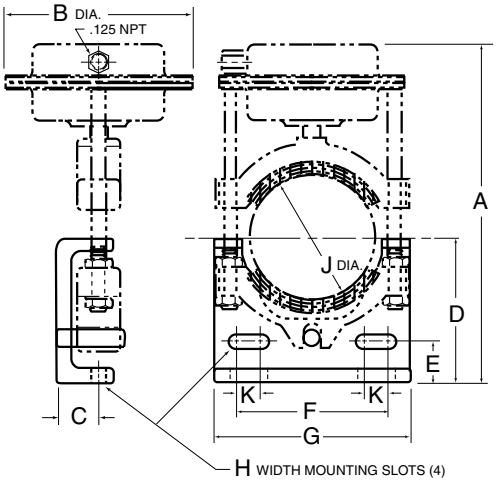

MODEL	PRODUCT NUMBER	A	B	C	D	E	F	G	H	J	K
J	842100	7.50	3.88	0.81	3.00	0.88	3.75	4.25	0.344	2.75	0.50
K	843700	9.62	5.00	1.25	3.88	1.25	5.12	5.75	0.406	4.00	0.62

MODEL 8K & 12K STANDARD DRUM BRAKES

These Drum Brakes are ideal for high torque and slow speed tension control applications:

- 8 inch or 12 inch Drum size
- Thermal Horsepower rating up to 3.000 HPt
- Static Torque capacity up to 3750 In. Lbs. @ 80 psi
- Each Model allows you to customize your drum bore
- **Shaft mounted** design
- Air Actuated for accurate, economical operation
- Long wearing friction linings

Order Brake and Drum separately.

Model 8K Drum Brakes

Component	Product Number	HP_t	Inertia Lb • In^2	Shipping Wt. (Lbs)	Speeds up to RPM
Model 8K Brake only	845200	1.500		12	
Drum, No Bore	845300		103.700	22	2700

Model 12K Drum Brakes

Component	Product Number	HP_t	Inertia Lb • In^2	Shipping Wt. (Lbs)	Speeds up to RPM
Model 12K Brake only	845500	3.000		18	
Drum, No Bore	845600		465.100	32	1800

Torque Vs. Air Pressure

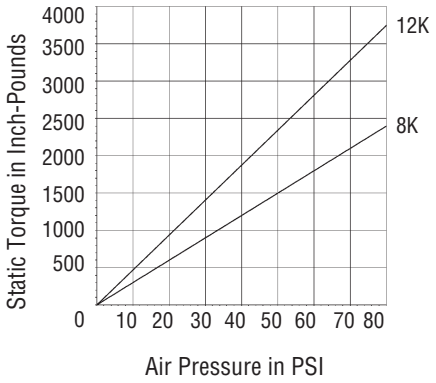

NOTE: Dynamic torque is approximately 85% of static torque.

MODEL 8K & 12K STANDARD DRUM BRAKES - APPROXIMATE DIMENSIONS (INCHES)

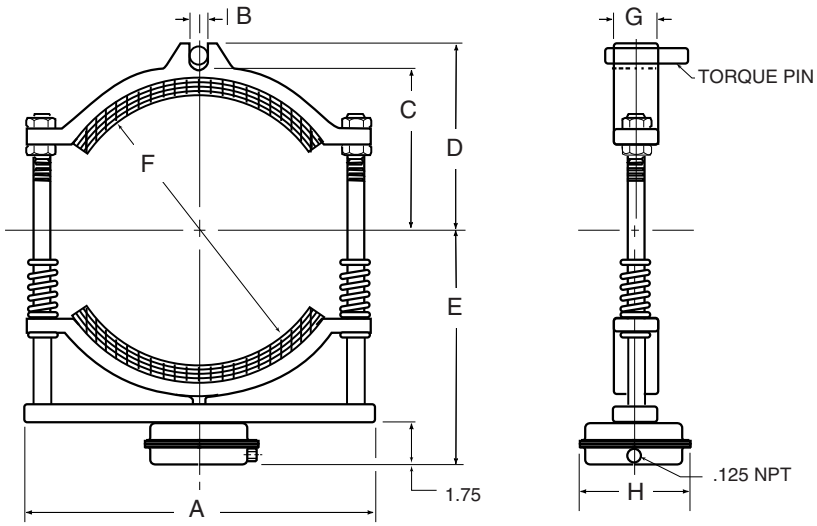

MODEL	PRODUCT NUMBER	A	B	C	D	E	F	G	H
8K	845200	10.75	0.75	4.88	6.00	7.88	8.00	2.00	5.00
12K	845500	15.00	0.88	7.19	8.19	10.25	12.00	2.00	5.00

Brake Drum

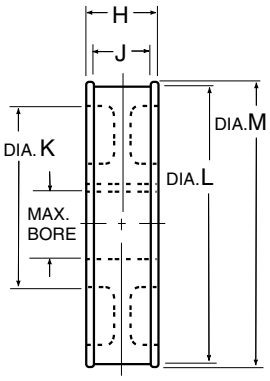

MODEL	PRODUCT NUMBER	H	J	K	L	M	MAX BORE $^{+.001}_{-.000}$
8K	845300	2.75	2.25	4.75	8.00	8.50	3.000
12K	845600	2.75	2.25	4.75	12.00	12.50	4.000

MODEL 4K, 8K & 12K HINGE TOP DRUM BRAKES

These Drum Brakes are ideal for high torque slow speed control applications:

- Hinged design for use with removable brake drums
- 4, 8 and 12 inch Drum sizes available
- Thermal Horsepower rating up to 3.000 HPt
- Static Torque capacity up to 3750 In. Lbs. @ 80 psi
- Each Model allows you to customize your drum bore
- **Shaft mounted** design
- Air Actuated for accurate, economical operation
- Long wearing friction linings

Order Brake and Drum separately.

Model 4K Hinge Top Drum Brakes

Component	Product Number	HP_t	Inertia Lb • In^2	Shipping Wt. (Lbs).	Speeds up to RPM
Model 4K Brake only	845100	0.500		8	
Drum, No Bore	843600		9.790	6	5500
Drum, Bored	844000		9.790	6	5500

Model 8K Hinge Top Drum Brakes

Component	Product Number	HP_t	Inertia Lb • In^2	Shipping Wt. (Lbs).	Speeds up to RPM
Model 8K Brake only	845400	1.500		18	
Drum, No Bore	845300		103.700	22	2700

Model 12K Hinge Top Drum Brakes

Component	Product Number	HP_t	Inertia Lb • In^2	Shipping Wt. (Lbs).	Speeds up to RPM
Model 12K Brake only	845700	3.000		29	
Drum, No Bore	845600		465.100	32	1800

Torque Vs. Air Pressure

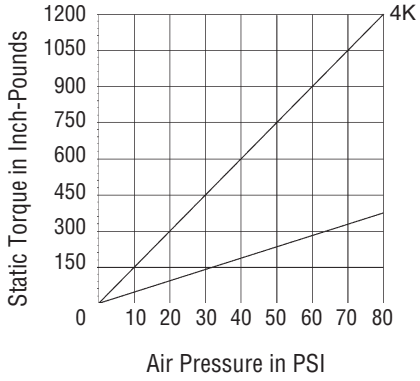

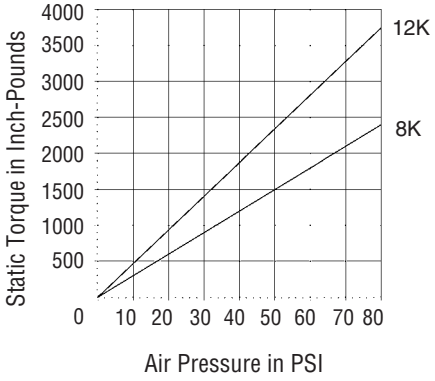

NOTE: Dynamic torque is approximately 85% of static torque.

MODEL 4K, 8K & 12K HINGE TOP DRUM BRAKES - APPROXIMATE DIMENSIONS (INCHES)

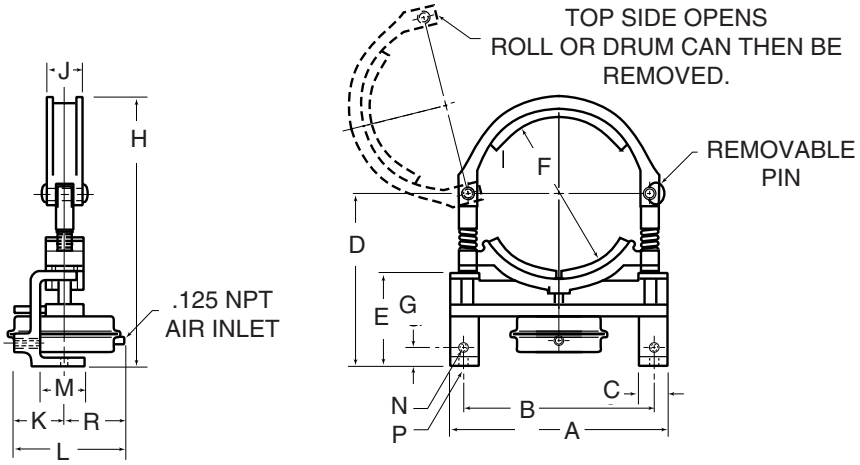

MODEL	PRODUCT NUMBER	A	B	C	D	E	F	G	H	J	K	L	M	N	P	Q	R
4K	845100	5.88	5.25	1.12	5.81	3.31	4.00	1.00	8.56	1.25	2.25	4.75	2.12	.375-16	0.44	1.69	2.50
8K	845400	11.25	9.75	1.50	9.09	4.88	8.00	1.00	14.06	2.00	2.62	5.12	2.06	.500-13	0.56	1.06	2.50
12K	845700	16.25	14.25	2.00	11.22	5.88	12.00	1.31	18.50	2.00	2.62	5.12	2.44	.750-10	0.78	1.31	2.50

Brake Drum

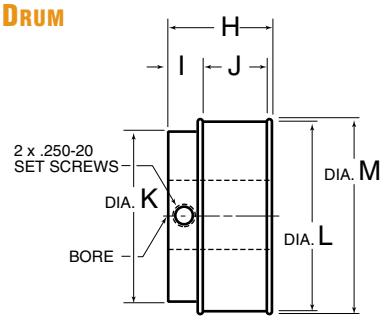

MODEL	PRODUCT NUMBER	H	I	J	K	L	M	BORE $^{+.001}_{-.000}$
4K	843600	2.12	0.62	1.38	2.62	4.00	4.12	NONE, 2.000 MAX
4K	844000	2.12	0.62	1.38	2.62	4.00	4.12	1.000

Brake Drum

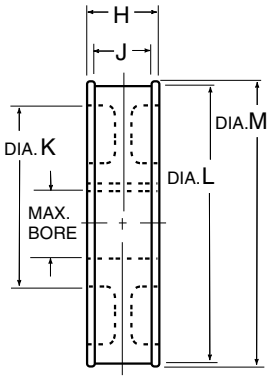

MODEL	PRODUCT NUMBER	H	J	K	L	M	MAX BORE $^{+.001}_{-.000}$
8K	845300	2.75	2.25	4.75	8.00	8.50	3.000
12K	845600	2.75	2.25	4.75	12.00	12.50	4.000

DUAL PLATE BRAKE MODELS DPB-9T & DPB-11T

- Static Torque capacity up to:

  DPB-9T/5500 In. Lbs. @ 80 psi

  DPB-11T/11,000 In. Lbs. @ 80 psi
- Maximum Operating Speed up to

  DPB-9T/2200 rpm

  DPB-11T/1800 rpm
- Thermal Horsepower rating of:

  DPB-9T/3.3 @ 2200 rpm

  DPB-11T/5.5 @ 1800 rpm
- Torque Arm assembly allows you to anchor the housing
- **Standard bore sizes:**

  DPB-9T/6 sizes; 1.187 to 2.375 inches

  DPB-11T/7 sizes; 1.187 to 2.875 inches
- **Accepts QD Bushings** for mounting flexibility; **DPB-9T/Size SK, DPB-11T/Size SF**

  Order Brake, Support Bushing and Torque Arm separately. QD Bushing is customer supplied.

DPB-9T& DPB-11T Dual Plate Brakes

Model	Brake Component	Product Number	MAX Speed (RPM)	HP_t	Shipping Wt. (Lbs)
DPB-9T	Brake	960000	2200	3.3	58
DPB-9T	Torque Arm	960100		--	11
DPB-11T	Brake	961000	1800	5.5	98
DPB-11T	Torque Arm	961100		--	13

Support Bushing/Bore Options

A Support Bushing is used in conjunction with a QD Bushing to reduce the brake bore. Bushings fit into the bore of the brake, reducing it to the size indicated.

Model	Brake Component	Product Number	Reduce Bore Size to: (In)	Shipping Wt. (Lbs)
DPB-9T	Support Bushing	960419	1.187	1
DPB-9T	Support Bushing	960423	1.437	1
DPB-9T	Support Bushing	960427	1.687	1
DPB-9T	Support Bushing	960430	1.875	1
DPB-9T	Support Bushing	960431	1.937	1
DPB-9T	Support Bushing	960434	2.125	1
DPB-9T	Bushing-Unfinished Bore	960400	0/1.130 ID MIN.	1
DPB-11T	Support Bushing	961430	1.875	2
DPB-11T	Support Bushing	961431	1.938	2
DPB-11T	Support Bushing	961434	2.125	2
DPB-11T	Support Bushing	961435	2.188	2
DPB-11T	Support Bushing	961438	2.375	2
DPB-11T	Support Bushing	961439	2.438	2
DPB-11T	Support Bushing	961440	2.500	2
DPB-11T	Bushing-Unfinished Bore	961400	0/1.375 ID MIN.	2

QD Mounting Bushings

Quick Detachable "QD" Bushings are customer furnished. Bushings fit into the bore of the brake, changing the bore to the size indicated.

CAUTION: QD Bushings must be capable of carrying the torque produced by the brake. Check with the QD Bushing manufacturer for bushing torque ratings.

Torque Vs. Air Pressure

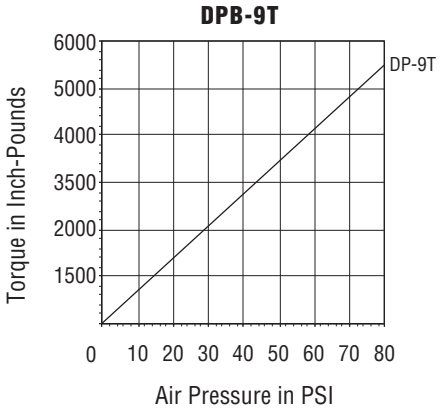

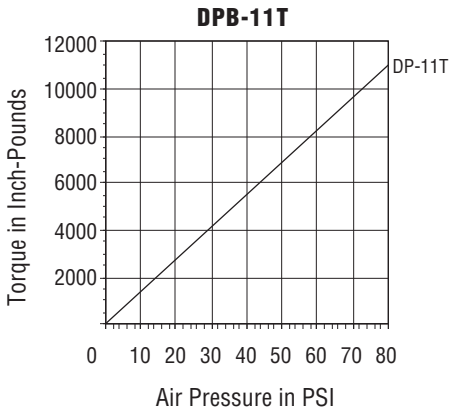

NOTE: Dynamic torque is approximately 85% of static torque.

DPB-9T& DPB-11 DUAL PLATE BRAKES - APPROXIMATE DIMENSIONS (INCHES)

Dual Plate Brake

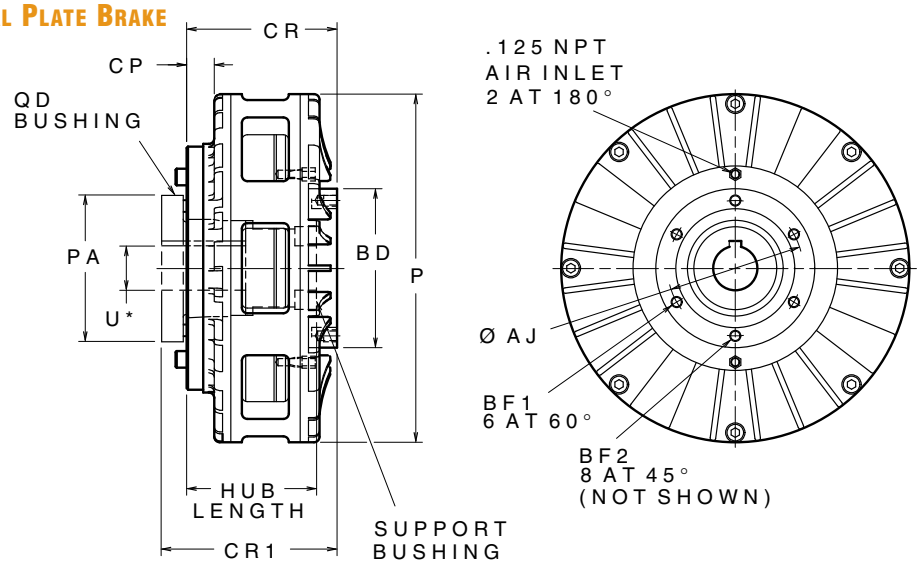

MODEL	PRODUCT NUMBER	AJ	BD	BF1	BF2	CP	CR	CR1	P	PA	HUB LENGTH	QD BUSHING	U*
DPB-9T	960000	4.250	4.83	.375-16	--	1.00	5.27	5.43	10.75	3.88	4.07	SK	2.375
DPB-11T	961000	4.750	5.50	.500-13	--	1.00	6.18	6.14	13.25	4.62	4.45	SF	2.875

*Maximum Bore without support bushings.

Torque Arm

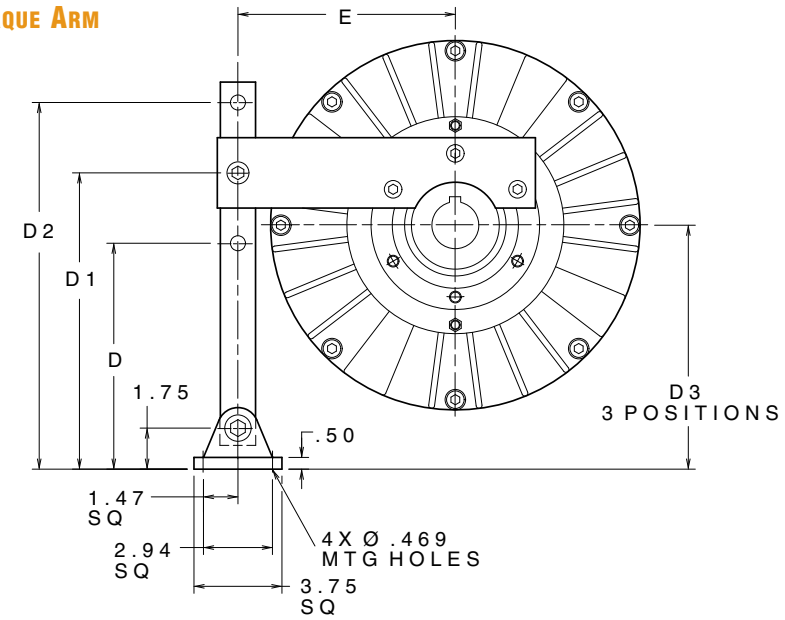

MODEL	PRODUCT NUMBER	D	D1	D2	D3 (3 POSITIONS) (D)	(D1)	(D2)	E
DPB-9T	960100	7.25	10.25	13.25	5.63	8.63	11.63	6.23
DPB-11T	961100	8.37	11.37	14.37	6.49	9.49	12.49	7.70

DUAL PLATE BRAKE MODELS DPB-13T & DPB-15T

- Static Torque capacity up to:

  DPB-13T/18,000 In. Lbs. @ 80 psi

  DPB-15T/36,000 In. Lbs. @ 80 psi
- Maximum Operating Speed up to

  DPB-13T/1200 rpm

  DPB-15T/900 rpm
- Thermal Horsepower rating of:

  DPB-13T/8.0 @ 1200 rpm

  DPB-15T/9.0 @ 900 rpm
- Torque Arm assembly allows you to anchor the housing
- **Standard bore sizes:**

  DPB-13T/3 sizes; 2.938 to 3.438 inches

  DPB-15T/2 sizes; 3.500 and 4.000 inches
- **Accepts QD Bushings** for mounting flexibility;
  DPB-13T/Size F, DPB-15T/Size J

  Order Brake, Support Bushing and Torque Arm separately. QD Bushing is customer supplied.

DPB-13T& DPB-15T Dual Plate Brakes

Model	Brake Component	Product Number	MAX Speed (RPM)	HP_t	Shipping Wt. (Lbs)
DPB-13T	Brake	962000	1200	8.0	200
DPB-13T	Torque Arm	962100		--	17
DPB-15T	Brake	963000	900	9.0	250
DPB-15T	Torque Arm	963100		--	21

Support Bushing/Bore Options

A Support Bushing is used in conjunction with a QD Bushing to reduce the brake bore. Bushings fit into the bore of the brake, reducing it to the size indicated.

Model	Brake Component	Product Number	Reduce Bore Size to: (In)	Shipping Wt. (Lbs)
DPB-13T	Support Bushing	962447	2.938	2
DPB-13T	Support Bushing	962454	3.375	2
DPB-13T	Support Bushing	962455	3.438	2
DPB-13T	Bushing-Unfinished Bore	962400	0/2.25 ID MIN.	2DPB-11T
DPB-15T	Support Bushing	963456	3.500	2
DPB-15T	Support Bushing	963463	3.938	2
DPB-15T	Bushing-Unfinished Bore	963400	0/3.00 ID MIN.	2

QD Mounting Bushings

Quick Detachable "QD" Bushings are customer furnished. Bushings fit into the bore of the brake, changing the bore to the size indicated.

CAUTION: QD Bushings must be capable of carrying the torque produced by the brake. Check with the QD Bushing manufacturer for bushing torque ratings.

Torque Vs. Air Pressure

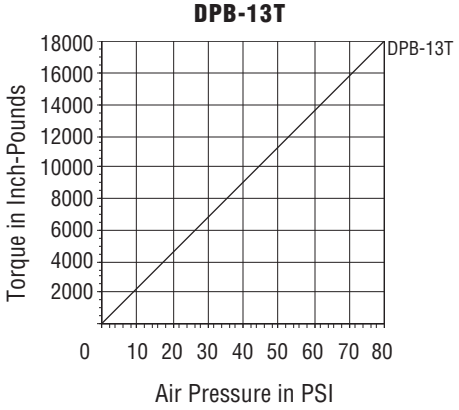

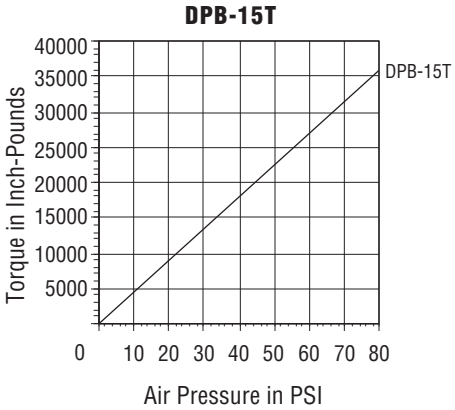

NOTE: Dynamic torque is approximately 85% of static torque.

DPB-13T& DPB-15 DUAL PLATE BRAKES - APPROXIMATE DIMENSIONS (INCHES)

Dual Plate Brake

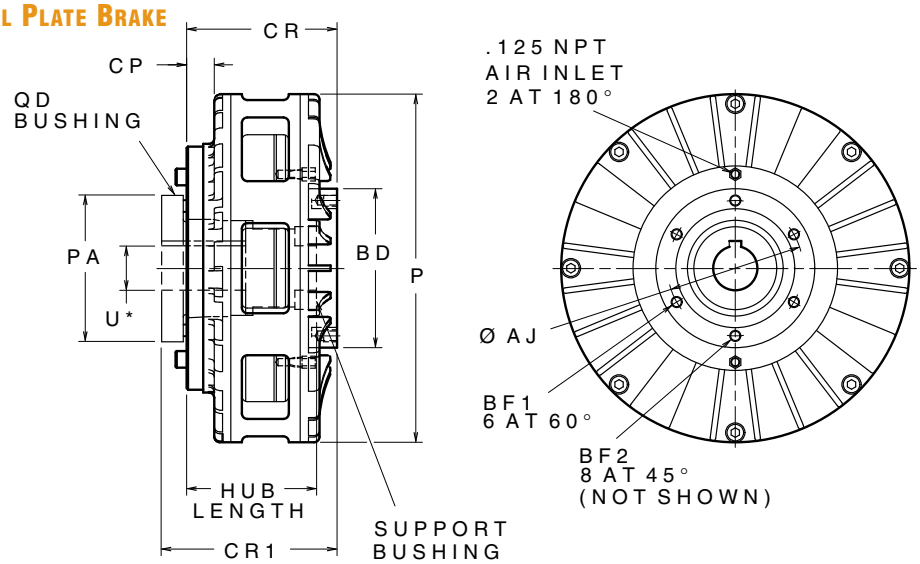

MODEL	PRODUCT NUMBER	AJ	BD	BF1	BF2	CP	CR	CR1	P	PA	HUB LENGTH	QD BUSHING	U*
DPB-13T	962000	6.125	7.19	.500-13	--	1.25	6.80	7.96	15.75	6.62	5.88	F	3.500
DPB-15T	963000	7.000	7.88	--	.500-13	1.13	7.28	8.65	18.00	7.25	6.63	J	4.000

*Maximum Bore without support bushings.

Torque Arm

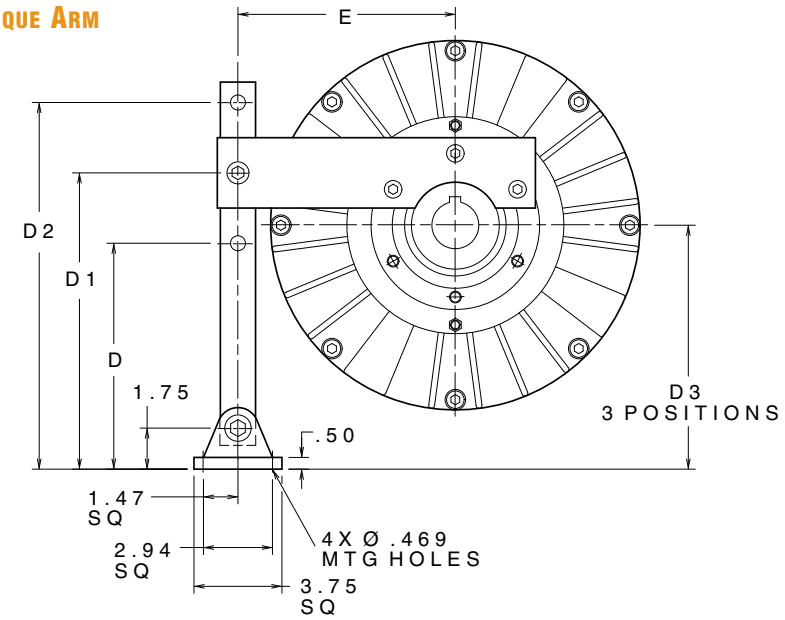

MODEL	PRODUCT NUMBER	D	D1	D2	D3 (3 POSITIONS) (D)	(D1)	(D2)	E
DPB-13T	962100	9.63	12.63	15.63	7.40	10.40	13.40	9.27
DPB-15T	963100	10.75	13.75	16.75	8.47	11.47	14.47	10.00

HEAVY DUTY SPRING ENGAGED BRAKE ELEMENTS DFB & QFB SERIES

This **16 Model** Series of spring engaged, air released **Dual Faced** and **Quad Faced Elements** are designed for heavy duty industrial applications requiring high torque and low inertia:

- Static Torque ratings up to 164,800 In. Lbs.
- Speeds up to 2200 rpm
- Thermal Horsepower values up to 14.7
- **Bore range** of 6.500 inches
- Brake can be **Thru-Shaft** or **Shaft-End** mounted. Units are inteded for horizontal shaft mounting only
- Dual Faced Elements have two interface surfaces, Quad Faced Elements have four interface surfaces
- Available with either Standard or High coefficient friction Facings
- Single or Double Disc Assemblies available in disc sizes from 11.500 to 25.000 inches
- Rugged design ensures long product life
- O-ring sealed piston & cylinder design reduces maintenance costs
- Air is supplied directly at the cylinder air inlets

With this Heavy Duty Series, tough applications are made easy. Each of the 16 Models are detailed on the next few pages.

Peak Input Rate

The DFB and QFB Series of Brakes are designed for applications requiring high torque and low inertia. The peak input rate may be the limiting factor in high inertia starts or stops, even though the Heat Sink Capacity is efficient.

The peak input rate capacity is the rate at which the brake absorbs heat at the friction interface during the deceleration period while interfaces are slipping, or until the load and the clutch are operating at the same speed. See page 368 in the Engineering Data Section for information explaining how to calculate the Peak Input Rate and how to avoid potential problems.

Heat Sink Capacities & Peak Input Rate

Model	Heat Sink Capacity (Ft Lbs)	Peak Input Rate(HP)	Effective Interface Areas
DFB 1150-S/H	390,000	105	117 in^2
DFB 1650-S/H	870,000	204	227 in^2
DFB 2200-S/H	1,187,000	297	330 in^2
DFB 2500-S/H	1,146,000	363	404 in^2
QFB 1150-S/H	780,000	210	234 in^2
QFB 1650-S/H	1,740,000	408	454 in^2
QFB 2200-S/H	2,374,000	594	660 in^2
QFB 2500-S/H	2,920,000	727	808 in^2

Continuous Rated Thermal Horsepower Dissipation vs RPM

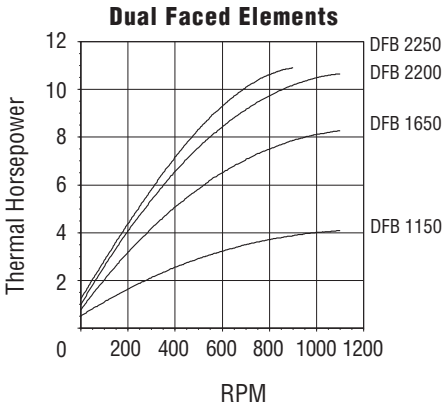

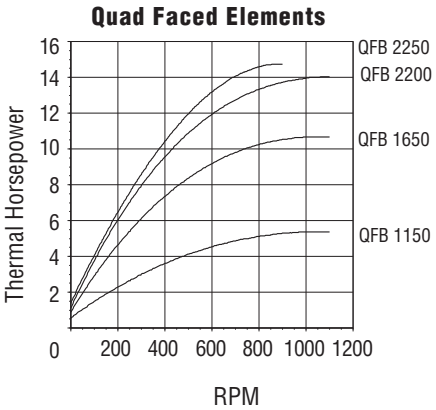

Shaft-End Mounted Brake Element

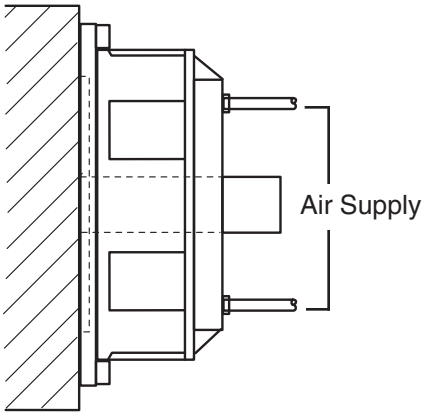

To Apply DFB & QFB Brakes

Element can be Shaft-End or Thru-Shaft Mounted, but must be in a horizontal position.

The housing is flange mounted to the machine frame.

The Hub is keyed to the shaft.

Air is supplied directly at the cylinder air inlets.

Brake Air Connection:

Connect the air supply directly to the two air ports, located 180 degrees apart in the cylinder.

DFB MODEL SERIES, SPRING ENGAGED BRAKE ELEMENTS

This **8 Model** Series of spring engaged, air released Dual Faced Elements are designed for heavy duty industrial applications requiring high torque and low inertia:

- Available with either Standard or High coefficient friction linings
- Available in disc sizes from 11.500 to 25.000 inches
- **Bore sizes** range up to 6.000 inches
- Static Torque ratings up to 82,400 In. Lbs.
- "O"-rIng sealed piston and cylinder design reduces maintenance costs
- Speeds up to 2200 rpm
- Thermal Horsepower values up to 10.9
- Rugged design insures long product life
- Air is supplied directly at the cylinder air inlets
- Brake can be **Thru-Shaft** or **Shaft-End** mounted
- Units are intended for horizontal shaft mounting only

How to Order DFB Brake Elements:

1. Determine which bore size you will need;
2. If you require a bore size other than the standard Hub bore, you can either order this special size from Nexen or machine it yourself.

Model	Product Number	Pilot Bore +.001/-.000	Max Bore	Torque Rating In. Lbs	Disc Inertia Lb. Ft^2	MAX Speed RPM	MIN Diseng. Air Pressure	Shipping Wt. (Lbs)
Standard Coefficient Friction Linings:								
DFB 1150-S	964072	1.000	2.500	6,100	2.800	2200	73 PSI	161
DFB 1650-S	964074	2.000	4.000	19,100	13.900	1500	70 PSI	286
DFB 2200-S	964076	2.500	6.000	33,600	45.100	1100	66 PSI	478
DFB 2500-S	964078	2.500	6.000	57,700	70.000	1000	66 PSI	603
High Coefficient Friction Linings:								
DFB 1150-H	964073	1.000	2.500	8,700	2.800	2200	73 PSI	161
DFB 1650-H	964075	2.000	4.000	27,200	13.,900	1500	70 PSI	286
DFB 2200-H	964077	2.500	6.000	48,000	45.100	1100	66 PSI	478
DFB 2500-H	964079	2.500	6.000	82,400	70.000	1000	66 PSI	603

Torque Capacities

Standard Coefficient Linings

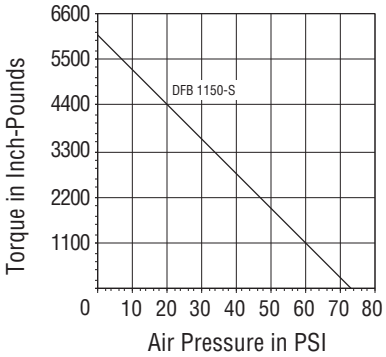

Standard Coefficient Linings

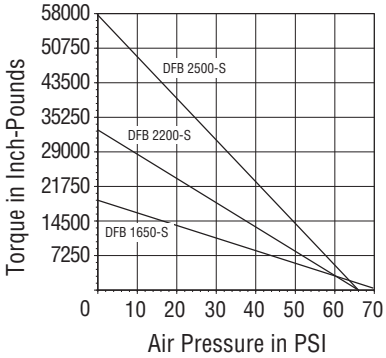

High Coefficient Linings

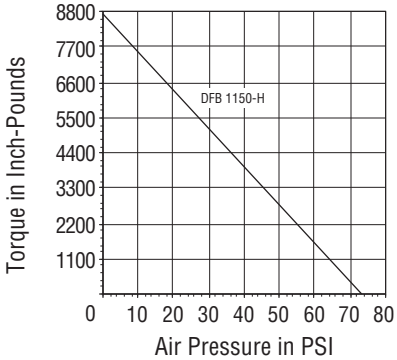

High Coefficient Linings

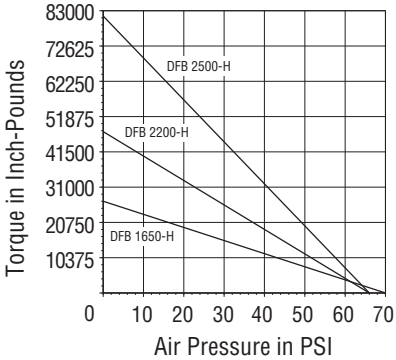

NOTE: Torque values for spring applied brakes will vary over the life of the brake as a function of spring force and the burnishing process of the lining. Published torque ratings are minimum values. Over the life of the linings, torque values may exceed published values by up to 40%.

DFB MODEL SPRING ENGAGED BRAKE ELEMENTS - APPROXIMATE DIMENSIONS (INCHES)

DFB Spring Engaged Brake

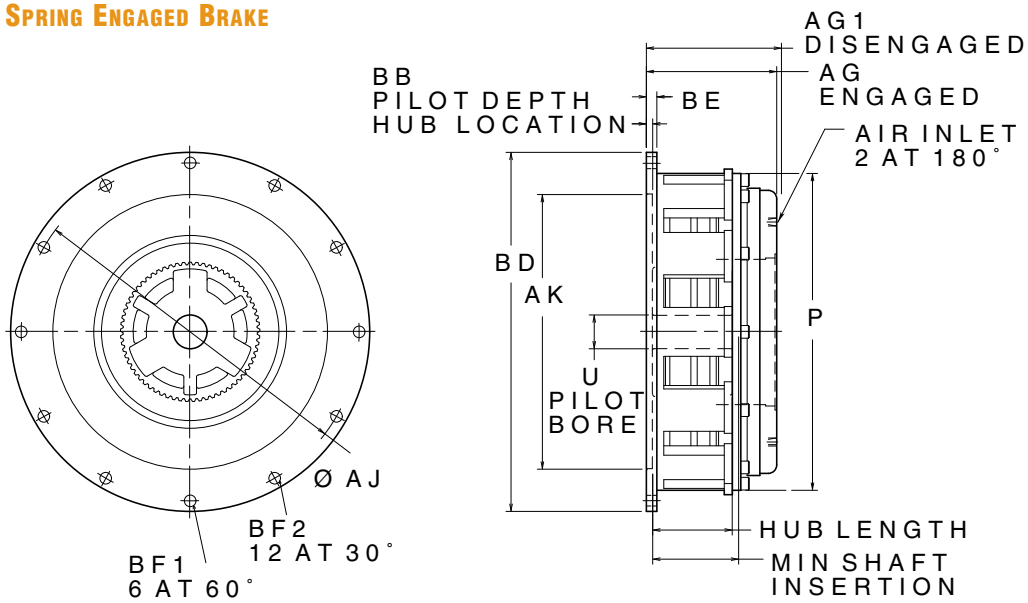

MODEL	PRODUCT NUMBER	AIR INLET NPT	HUB LENGTH	AG	AG1	AJ	AK±.001	BB	BD	BE	BF1	BF2	P	U +.001 -.000	MIN SHAFT INSERTION
DFB 1150-S	964072	.250	3.90	7.74	7.88	14.750	11.376	0.38	16.00	0.62	0.687	--	13.62	1.000	4.38
DFB 1150-H	964073	.250	3.90	7.74	7.88	14.750	11.376	0.38	16.00	0.62	0.687	--	13.62	1.000	4.38
DFB 1650-S	964074	.500	4.70	7.71	7.85	20.000	16.251	0.38	21.25	0.62	--	0.687	18.75	2.000	5.08
DFB 1650-H	964075	.500	4.70	7.71	7.85	20.000	16.251	0.38	21.25	0.62	--	0.687	18.75	2.000	5.08
DFB 2200-S	964076	.500	6.00	8.46	8.74	25.500	21.376	0.31	27.00	0.75	--	0.687	24.50	2.500	6.31
DFB 2200-H	964077	.500	6.00	8.46	8.74	25.500	21.376	0.31	27.00	0.75	--	0.687	24.50	2.500	6.31
DFB 2500-S	964078	.500	6.00	8.53	8.81	28.750	24.376	0.25	30.00	0.75	--	0.687	27.50	2.500	6.25
DFB 2500-H	964079	.500	6.00	8.53	8.81	28.750	24.376	0.25	30.00	0.75	--	0.687	27.50	2.500	6.25

Hub Bore Information

All standard Hubs are furnished in the bore listed in dimension "U" and without keyway or set screw. The Hub bore can be increased to a size equal to the maximum diameter indicated in the table. If you need to increase the bore size of the Hub, you have two options:

1. Nexen can supply you with a specified bore and matching keyway at your request for an extra charge;
2. You can machine your own bore and keyway, with the limits listed in the table.

The following table indicates bore sizes and corresponding key and set screw sizes.

Bore Size	Key Size (sq)	Set Screw Dia.
1.000-1.250	0.250	0.312
1.312-1.375	0.312	0.375
1.437-1.750	0.375	0.375
1.812-2.250	0.500	0.500
2.312-2.750	0.625	0.500
2.812-3.250	0.750	0.625
3.312-3.750	0.875	0.750
3.812-4.500	1.000	0.750
4.562-5.500	1.250	0.875
5.562-6.000	1.500	1.000

DFB Hub

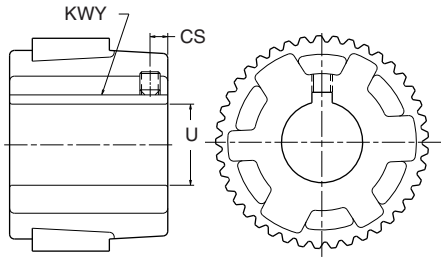

MODEL	CS
DFB 1150	0.44
DFB 1650	0.62
DFB 2200	0.75
DFB 2500	0.75

QFB MODEL SERIES, SPRING ENGAGED BRAKE ELEMENTS

This **8 Model** Series of spring engaged, air released Quad Faced Elements are designed for heavy duty industrial applications requiring high torque and low inertia:

- Available with either Standard or High coefficient friction linings
- Available in disc sizes from 11.500 to 25.000 inches
- **Bore sizes** range up to 6.000 inches
- Static Torque ratings up to 164,800 In. Lbs.
- "O"-ring sealed piston and cylinder design reduces maintenance costs
- Speeds up to 2200 rpm
- Thermal Horsepower values up to 14.7
- Rugged design insures long product life
- Air is supplied directly at the cylinder air inlets
- Brake can be **Thru-Shaft** or **Shaft-End** mounted
- Units are intended for horizontal shaft mounting only

Each of the 8 Models are detailed on the next 2 pages. Before looking at the details, first acquaint yourself with the important 'how to order' information.

How to Order QFB Brake Elements:

1. Determine which bore size you will need;
2. If you require a bore size other than the standard Hub bore, you can either order this special size from Nexen or machine it yourself.

Model	Product Number	Pilot Bore +.001/-.000	Max Bore	Torque Rating In. Lbs	Disc Inertia Lb. Ft^2	MAX Speed RPM	MIN Diseng. Air Pressure	Shipping Wt. (Lbs)
Standard Coefficient Friction Linings:								
QFB 1150-S	964080	1.500	3.250	12,200	5.600	2200	73 PSI	220
QFB 1650-S	964082	2.000	5.000	38,200	24.600	1500	70 PSI	392
QFB 2200-S	964084	3.000	6.500	67,200	90.000	1100	66 PSI	682
QFB 2500-S	964086	3.500	6.500	115,400	139.300	1000	66 PSI	848
High Coefficient Friction Linings:								
QFB 1150-H	964081	1.500	3.250	17,400	5.600	2200	73 PSI	220
QFB 1650-H	964083	2.000	5.000	54,400	24.600	1500	70 PSI	392
QFB 2200-H	964085	3.000	6.500	96,000	90.000	1100	66 PSI	682
QFB 2500-H	964087	3.500	6.500	164,800	139.300	1000	66 PSI	848

Torque Capacities

Standard Coefficient Linings

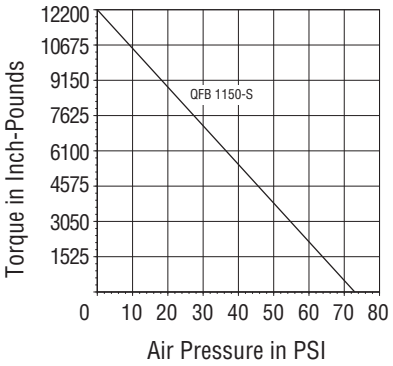

Standard Coefficient Linings

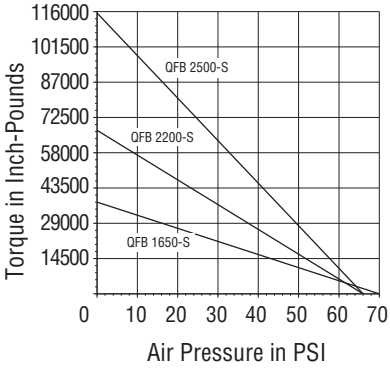

High Coefficient Linings

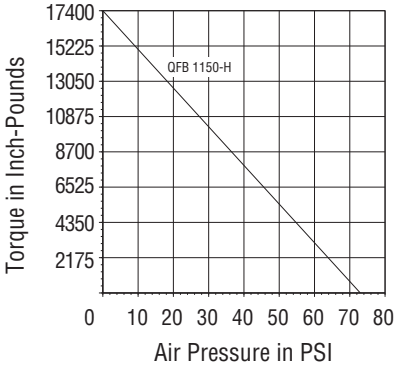

High Coefficient Linings

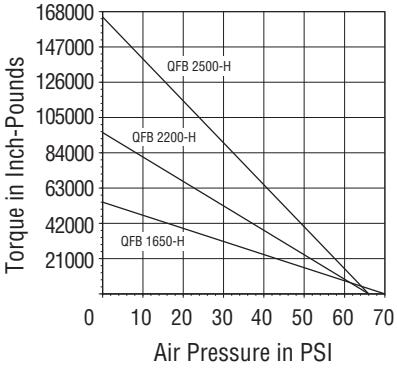

NOTE: Torque values for spring applied brakes will vary over the life of the brake as a function of spring force and the burnishing process of the lining. Published torque ratings are minimum values. Over the life of the linings, torque values may exceed published values by up to 40%.

QFB MODEL SPRING ENGAGED BRAKE ELEMENTS - APPROXIMATE DIMENSIONS (INCHES)

QFB Spring Engaged Brake

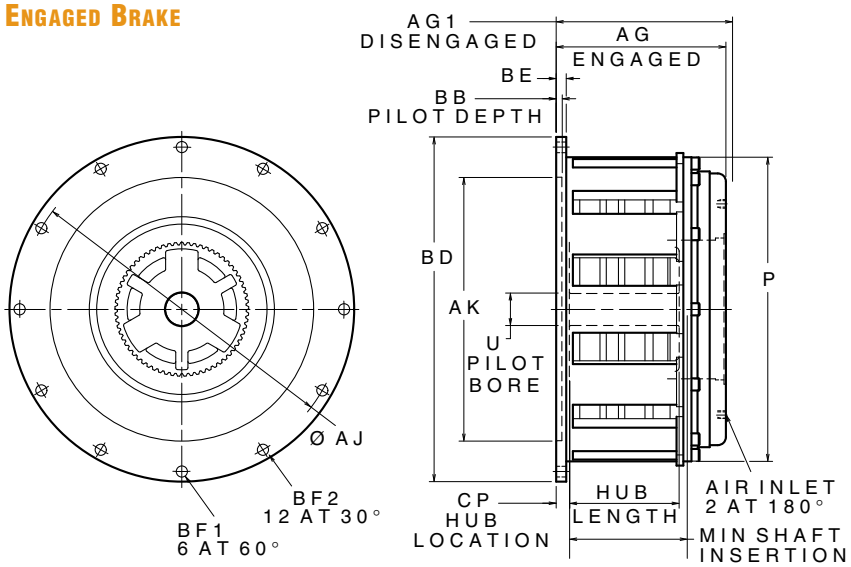

MODEL	PRODUCT NUMBER	AIR INLET NPT	HUB LENGTH	AG	AG1	AJ	AK±.001	BB	BD	BE	BF1	BF2	CP	P	U +.001 -.000	MIN SHAFT INSERTION
QFB 1150-S	964080	.250	5.88	10.48	10.62	14.750	11.376	0.38	16.00	0.62	0.687	--	0.90	13.62	1.500	6.78
QFB 1150-H	964081	.250	5.88	10.48	10.62	14.750	11.376	0.38	16.00	0.62	0.687	--	0.90	13.62	1.500	6.78
QFB 1650-S	964082	.500	6.75	10.45	10.59	20.000	16.251	0.38	21.25	0.62	--	0.687	0.83	18.75	2.000	7.62
QFB 1650-H	964083	.500	6.75	10.45	10.59	20.000	16.251	0.38	21.25	0.62	--	0.687	0.83	18.75	2.000	7.62
QFB 2200-S	964084	.500	7.88	11.58	11.86	25.500	21.376	0.31	27.00	0.75	--	0.687	1.06	24.50	3.000	8.94
QFB 2200-H	964085	.500	7.88	11.58	11.86	25.500	21.376	0.31	27.00	0.75	--	0.687	1.06	24.50	3.000	8.94
QFB 2500-S	964086	.500	7.88	11.67	11.95	28.750	24.376	0.25	30.00	0.75	--	0.687	1.09	27.50	3.500	8.97
QFB 2500-H	964087	.500	7.88	11.67	11.95	28.750	24.376	0.25	30.00	0.75	--	0.687	1.09	27.50	3.500	8.97

Hub Bore Information

All standard Hubs are furnished in the bore listed in dimension "U" and without keyway. The Hub bore can be increased to a size equal to the maximum diameter indicated in the table. If you need to increase the bore size of the Hub, you have two options:

1. Nexen can supply you with a specified bore and matching keyway at your request for an extra charge;
2. You can machine your own bore and keyway, within the limits listed in the table.

The following table indicates bore sizes and corresponding key & set screw sizes.

Bore Size	Key Size (sq)	Set Screw Dia.
1.000-1.250	0.250	0.312
1.312-1.375	0.312	0.375
1.437-1.750	0.375	0.375
1.812-2.250	0.500	0.500
2.312-2.750	0.625	0.500
2.812-3.250	0.750	0.625
3.312-3.750	0.875	0.750
3.812-4.500	1.000	0.750
4.562-5.500	1.250	0.875
5.562-6.000	1.500	1.000

QFB Hub Only

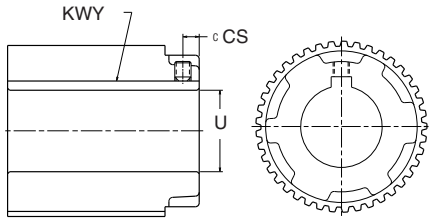

Model	CS
QFB 1150	0.50
QFB 1650	0.75
QFB 2200	0.75
QFB 2500	0.75

METRIC S SERIES STRAIGHT BORE FRICTION BRAKES, S-450, S-600, S-800 & S-1000

- Static Torque capacity up to:
  S-450/55 Nm & S-600/105 Nm
  S-800/197 Nm & S-1000/420 Nm
- Maximum Operating Speed up to 1800 rpm
- Thermal capacity rating of:
  S-450/380W @ 1800 rpm
  S-600/970W @ 1800 rpm
  S-800/1660W @ 1800 rpm
  S-1000/2230W @ 1800 rpm
- Heat Sink capacity up to:
  S-450 & 600/81,000 joules
  S-800 & S-1000/271,000 joules

These self-adjusting air cooled brakes mount easily and come with:

- **Standard Bore Sizes:**
  S-450/25 millimeters
  S-600/35 millimeters
  S-800/50 millimeters
  S-1000/75 millimeters
- **4 Minimum Bore Sizes** for custom machining
- Split friction facings for easy replacement without brake removal or disassembly
- Aluminum piston minimizes inerta for smoother response
- Thru-shaft design can be **flange mounted** or **shaft mounted** with a torque pin

Options and Accessories include:

- Torque Pin Bracket allows you to anchor the housing
- Brake Safety Guard for protection

Metric S-450, S-600, S-800 & S- 1000 Model Friction Brakes

Model	Component	Product Number	Bore (mm)	Key Size	Shipping Wt. (kg)
S-450	Brake, Standard Bore	827810	25	8 x 7	6,2
S-450	Brake, Minimum Bore	827811	13	--	6,2
S-600	Brake, Standard Bore	827910	35	10 x 8	6,2
S-600	Brake, Minimum Bore	827911	17	--	6,2
S-800	Brake, Standard Bore	828010	50	14 x 9	11
S-800	Brake, Minimum Bore	828012	21	--	11
S-1000	Brake, Standard Bore	828110	75	20 x 12	20
S-1000	Brake, Minimum Bore	828111	25	--	20

Minimum bore units are supplied unassembled with machinable hub.

Accessories

Model	Component	Product Number	Shipping Wt. (kg)
S-450	Torque Pin Bracket	819900	.45
S-450	Brake Safety Guard	817700	.90
S-600	Torque Pin Bracket	821400	.90
S-600	Brake Safety Guard	818300	.90
S-800	Torque Pin Bracket	823400	1.81
S-800	Brake Safety Guard	826300	1.36
S-1000	Torque Pin Bracket	825500	1.81
S-1000	Brake Safety Guard	828200	1.81

Torque Vs. Air Pressure

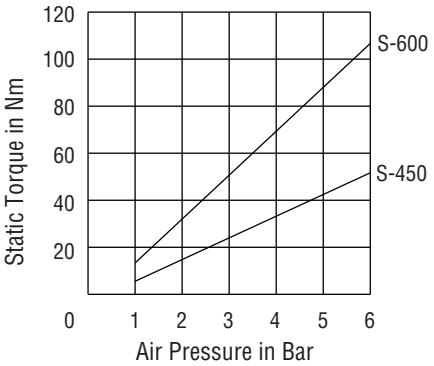

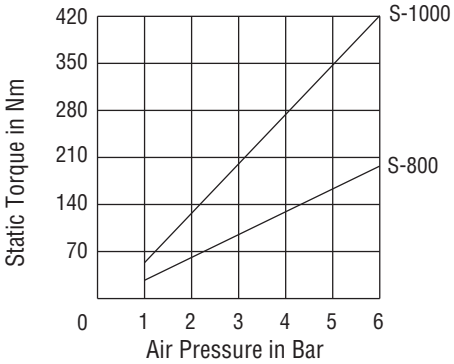

NOTE: Dynamic torque is approximately 85% of static torque.

Torque (In. Lbs.) = Nm x 8.849
PSI = Bar ÷ .0689

METRIC SERIES STRAIGHT BORE FRICTION BRAKES - APPROXIMATE DIMENSIONS (MILLIMETERS)

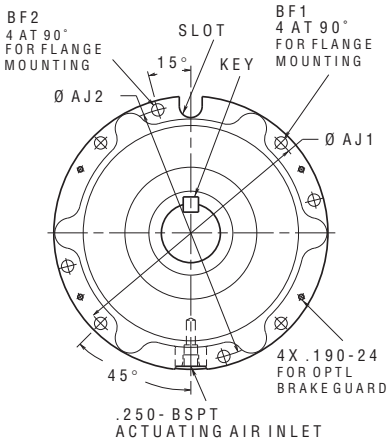

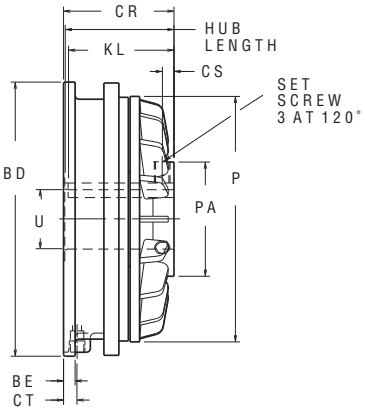

MODEL	PRODUCT NUMBER	P	PA	U H7	KL	BE	CR	CS	CT	AJ1	AJ2	BD	BF1	BF2	KEY	SET SCREWS	SLOT WD	SLOT DP	HUB LENGTH
S-450	827810	116	48	25	22	6	64	5	11	135	--	151	7	--	8 x 7	M5	10	16	64
S-600	827910	154	67	35	79	10	81	6	10	165	--	183	9	--	10 x 8	M6	16	17	79
S-800	828010	205	95	50	90	10	92	10	11	40	--	229	10	--	14 x 9	M6	20	18	91
S-1000	828110	256	127	75	100	13	103	10	18	278	279	302	13	13	20 x 12	M10	24	23	101

Brake Safety Guard

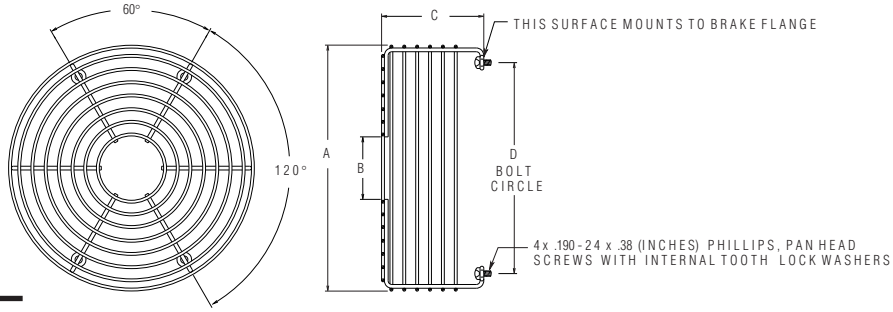

MODEL	PRODUCT NUMBER	A	B	C	D
S-450	817700	167	41	68	133
S-600	818300	200	51	83	171
S-800	826300	246	70	93	213
S-1000	828200	316	95	129	282

Torque Pin Bracket

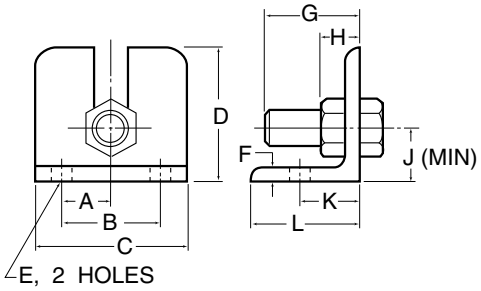

MODEL	PRODUCT NUMBER	A	B	C	D	E	F	G	H	J	K	L
S-450	819900	19	38,1	57	51	10,3	6	38	13	19	25,4	51
S-600	821400	25	50,8	76	64	10,3	6	41	16	28	25,4	51
S-800	823400	28	57,2	89	76	11,9	8	51	19	30	35,1	64
S-1000	825500	32	63,5	102	102	13,5	10	64	22	35	41,1	76

NOTE: Drawings are expressed in third angle projection.

METRIC SSE SERIES STRAIGHT BORE SPRING ENGAGED BRAKES, MODELS SSE-450 & SSE-600

- Static Torque capacity up to:
  SSE-450/50 Nm
  SSE-600/110 Nm
- Maximum Operating Speed up to 1800 rpm
- **Standard Bore Sizes:**
  S-450/25 millimeters
  S-600/35 millimeters
- Thermal capacity rating of:
  S-450/380W @ 1800 rpm
  S-600/970W @ 1800 rpm
- Heat Sink capacity up to:
  S-450/40,670 joules
  S-600/81,000 joules

These spring engaged, air disengaged brakes mount easily and come with:

- Open spring sockets that allow you to add or remove springs to fit your torque needs
- Split friction facings for easy replacement without brake removal or disassembly
- Single plate, finned friction discs provide high heat dissipation
- High dynamic torque capacity insures fast load response
- Flow restrictor valve controls disengagement air to prevent shock load on brake components

Options include:

- Torque Pin Bracket Allows you to keep the housing from spinning
- Brake Safety Guard for protection

Metric SSE-450 & SSE-600 Model Spring Engaged Brakes

Model	Component	Product Number	Number of Springs	Torque Rating Nm ± -10%	MIN Disengagement Air Pressure ± 10% (Bar)	Bore (mm)	Shipping Wt. (kg)
SSE-450	Brake	818830	6	27	4	25	6
SSE-450	Brake	818865	8	40	5	25	6
SSE-450	Brake	818866	10	50	6	25	6
SSE-600	Brake	820330	6	60	4	35	9
SSE-600	Brake	820365	8	90	5	35	9
SSE-600	Brake	820366	10	110	6	35	9

Torque values will exceed those shown after the brake has been burnished in.

Torque values for spring applied brakes will vary over the life of the brake as a function of spring force and the burnishing process of the lining. Over the life of the linings, torque values may exceed published values by up to 40%.

Accessories

Model	Component	Product Number	Shipping Wt. (kg)
SSE-450	Torque Pin Bracket	819900	.45
SSE-450	Brake Safety Guard	817700	.90
SSE-600	Torque Pin Bracket	821400	.90
SSE-600	Brake Safety Guard	818300	.90

Torque Vs. Air Pressure

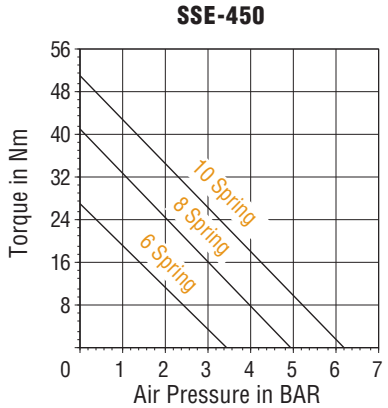

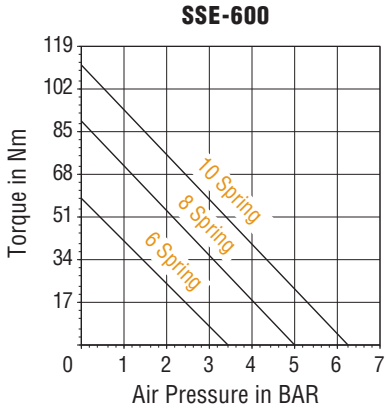

NOTE: Dynamic torque is approximately 85% of static torque.

Torque (In. Lbs.) = Nm x 8.849
PSI = Bar ÷ .0689

SSE-450 & SSE-600 MODEL STRAIGHT BORE SPRING ENGAGED BRAKES- APPROXIMATE DIMENSIONS (MILLIMETERS)

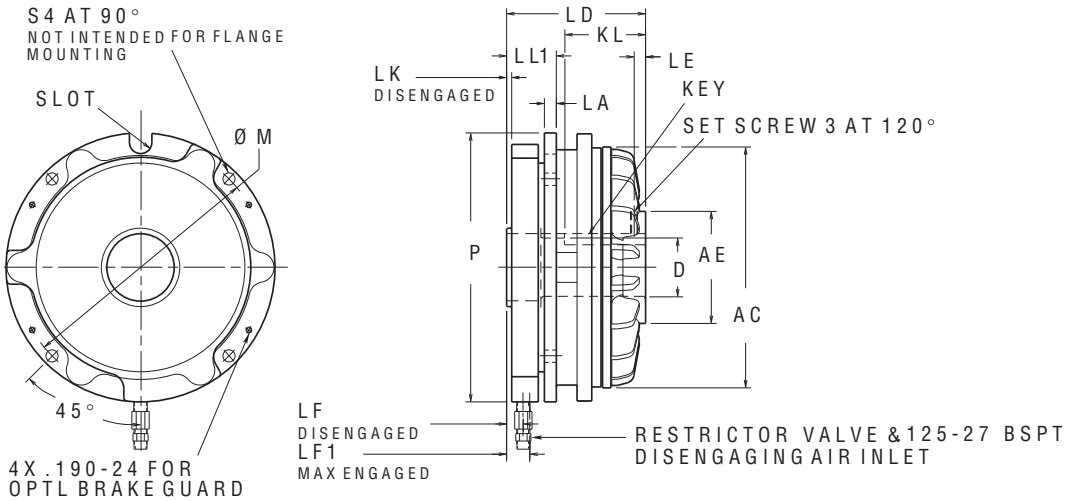

MODEL	PRODUCT NUMBER	AC	AE	D H7	KEY	KL	LA	LD	LE	LF	LF1	LK	LL1	M	P	S	SLOT WD	SLOT DP	SET SCREW
SSE-450	818830	116	48	25	7 x 8	22	7	90	5	9	12	0,3	34	135	151	7	10	17	M5
SSE-450	818865	116	48	25	7 x 8	22	7	90	5	9	12	0,3	34	135	151	7	10	17	M5
SSE-450	818866	116	48	25	7 x 8	22	7	90	5	9	12	0,3	34	135	151	7	10	17	M5
SSE-600	820330	154	67	35	8 x 10	79	10	108	6	8	12	-0,3	37	165	183	9	16	17	M6
SSE-600	820365	154	67	35	8 x 10	79	10	108	6	8	12	-0,3	37	165	183	9	16	17	M6
SSE-600	820366	154	67	35	8 x 10	79	10	108	6	8	12	-0,3	37	165	183	9	16	17	M6

NOTE: Drawings are expressed in third angle projection.

Brake Safety Guard

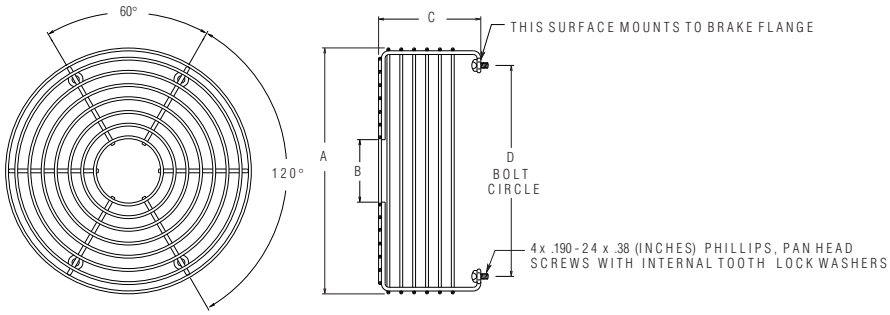

MODEL	PRODUCT NUMBER	A	B	C	D
SSE-450	817700	167	41	68	133
SSE-600	818300	200	51	83	171

Torque Pin Bracket

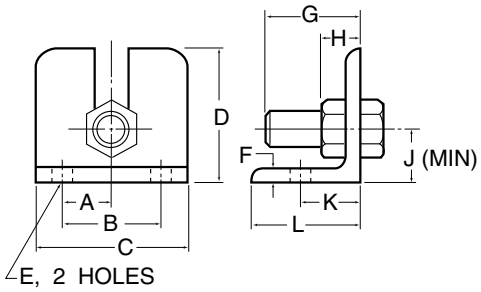

MODEL	PRODUCT NUMBER	A	B	C	D	E	F	G	H	J	K	L
SSE-450	819900	19	38,1	57	51	10	6	38	13	19	25	51
SSE-600	821400	25	50,8	76	64	10,3	6	41	16	28	25,4	51

METRIC SSE SERIES STRAIGHT BORE SPRING ENGAGED BRAKES, MODELS SSE-800 & SSE-1000

- Static Torque capacity up to:
  SSE-800/280 Nm
  SSE-1000/418 Nm
- Maximum Operating Speed up to 1800 rpm
- **Standard Bore Sizes:**
  S-800/50 millimeters
  S-1000/75 millimeters
- Thermal capacity rating of:
  S-800/1660W @ 1800 rpm
  S-1000/2230W @ 1800 rpm
- Heat Sink capacity up to:
  S-800/169,000 joules
  S-1000/271,000 joules

These spring engaged, air disengaged brakes mount easily and come with:

- Open spring sockets that allow you to add or remove springs to fit your torque needs
- Split friction facings for easy replacement without brake removal or disassembly
- Single plate, finned friction discs provide high heat dissipation
- High dynamic torque capacity insures fast load response
- Flow restrictor valve controls disengagement air to prevent shock load on brake components

Options include:

- Torque Pin Bracket Allows you to keep the housing from spinning
- Brake Safety Guard for protection

Metric SSE-800 & SSE-1000 Model Spring Engaged Brakes

Model	Component	Product Number	Number of Springs	Torque Rating Nm ± -10%	MIN Disengagement Air Pressure ± 10% (Bar)	Bore (mm)	Shipping Wt. (kg)
SSE-800	Brake	822430	6	147	4	50	14
SSE-800	Brake	822465	8	226	5	50	14
SSE-800	Brake	822466	10	280	6	50	14
SSE-1000	Brake	822530	6	248	4	75	31
SSE-1000	Brake	822565	8	340	5	75	31
SSE-1000	Brake	822566	10	418	6	75	31

Torque values will exceed those shown after the brake has been burnished in.

Torque values for spring applied brakes will vary over the life of the brake as a function of spring force and the burnishing process of the lining. Over the life of the linings, torque values may exceed published values by up to 40%.

Accessories

Model	Component	Product Number	Shipping Wt. (kg)
SSE-800	Torque Pin Bracket	823400	.90
SSE-800	Brake Safety Guard	826300	1.36
SSE-1000	Torque Pin Bracket	825500	1.81
SSE-1000	Brake Safety Guard	828200	1.81

Torque Vs. Air Pressure

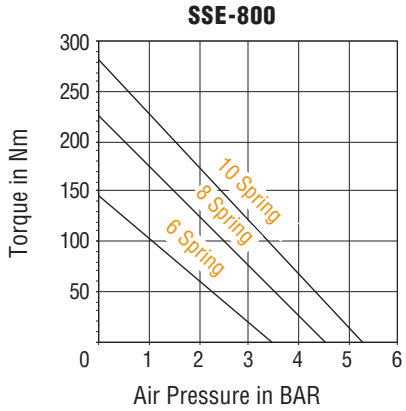

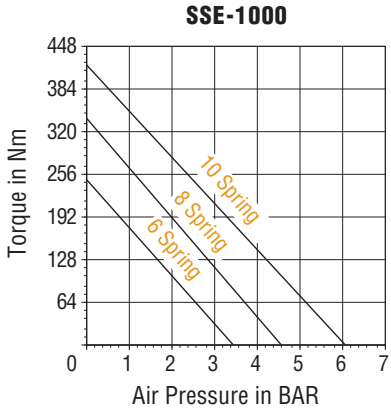

NOTE: Dynamic torque is approximately 85% of static torque.

Torque (In. Lbs.) = Nm x 8.849
PSI = Bar ÷ .0689

SSE-800 & SSE-1000 MODEL STRAIGHT BORE SPRING ENGAGED BRAKES- APPROXIMATE DIMENSIONS (MILLIMETERS)

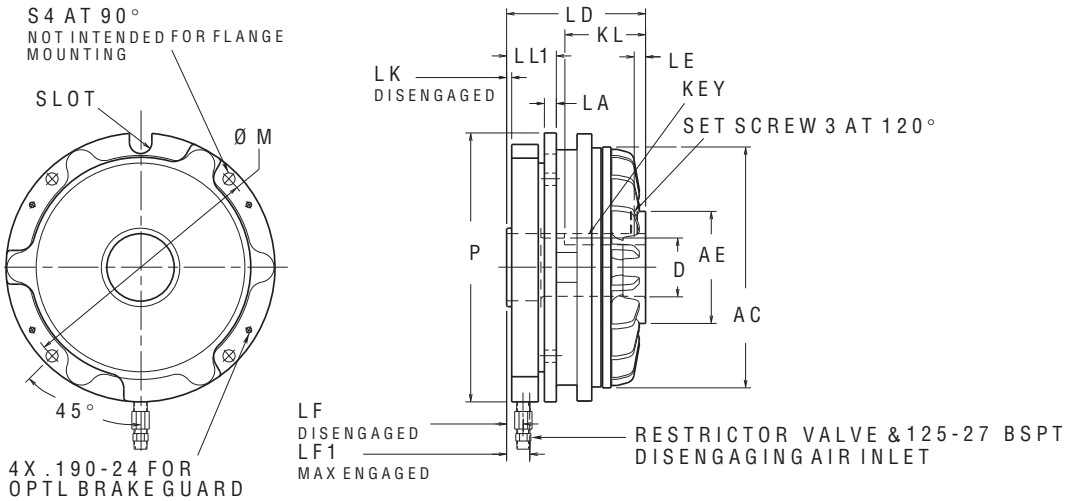

MODEL	PRODUCT NUMBER	AC	AE	D H7	KEY	KL	LA	LD	LE	LF	LF1	LK	LL1	M	P	S	SLOT WD	SLOT DP	SET SCREW
SSE-800	822430	205	95	50	10 x 14	90	10	118	10	15	20	5	42	213	229	10	19	18	M6
SSE-800	822465	205	95	50	10 x 14	90	10	118	10	15	20	5	42	213	229	10	19	18	M6
SSE-800	822466	205	95	50	10 x 14	90	10	118	10	15	20	5	42	213	229	10	19	18	M6
SSE-1000	822530	256	127	75	12 x 20	100	13	138	10	10	15	-5	43	278	302	13	22	23	M10
SSE-1000	822565	256	127	75	12 x 20	100	13	138	10	10	15	-5	43	278	302	13	22	23	M10
SSE-1000	822566	256	127	75	12 x 20	100	13	138	10	10	15	-5	43	278	302	13	2	23	M10

NOTE: Drawings are expressed in third angle projection.

Brake Safety Guard

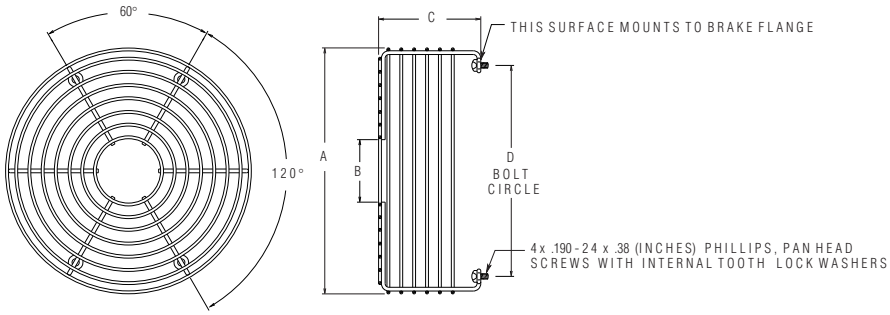

MODEL	PRODUCT NUMBER	A	B	C	D
SSE-800	826300	246	70	93	213
SSE-1000	828200	316	95	129	282

Torque Pin Bracket

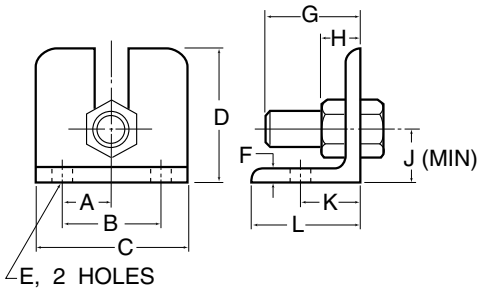

MODEL	PRODUCT NUMBER	A	B	C	D	E	F	G	H	J	K	L
SSE-800	823400	28	57,2	89	76	11,9	8	51	19	30	35,1	64
SSE-1000	825500	32	63,5	102	102	13,5	10	64	22	35	41,1	76

Product Function/Selection Chart

Product Groups	Friction Brakes	Caliper Brakes	Drum Brakes	Servo Motor Brakes	Linear Brakes	Spring Engaged Brakes	Dual Plate Brakes	High Capacity Brakes
General Features								
Number of Model Options	22 Standard 4 Metric	10 Standard 0 Metric	7 Standard 0 Metric	25 Standard		14 Standard 8 Metric	4 Standard 0 Metric	16 Standard 0 Metric
Functions								
Controlled Deceleration	Yes	Yes	Yes				Yes	
Cycling/Indexing	Yes	Yes					Yes	
Tension Control	Yes	Yes	Yes				Yes	
Stopping/Holding	Yes	Yes	Yes	Yes	Yes	Yes	Yes	Yes

In accordance with Nexen's established policy of constant product improvement, the specifications contained in this document are subject to change without notice. Technical data listed in this document are based on the latest information available at the time of printing and are also subject to change without notice. For current information, please consult:
www.nexengroup.com

TENSION CONTROL BRAKES

This Section Contains: . . . .Page

TENSION CONTROL BRAKES

Nexen XTB Tension Control Brakes...200-201
TCB 7 Tension Control Brakes.....202-203
XTB 10A & XTB 10 TC Brakes.....204-205
XTB 12A & XTB 12 TC Brakes.....206-207
XTB 14A & XTB 14 TC Brakes.....208-209
XTB 18A & XTB 18 & XTB 18 Dual Tension Control Brakes 210-211
XTB 22 & XTB 22 Dual TC Brakes 212-213
BTBA Tension Control Brakes.....214
BTBA 10 & 12 Tension Control Brakes 215
STB 600 & 940 Brakes.....216-217
S-450A, T-450A, S-600A, T-600A, S-800A,T-800A, S-1000A, T-1000A Advanced Series Straight & Tapered Bore Brakes 218-219
Recommended Tensions For Typical Applications 220
Technical Evaluation For Brakes 221
Magnetic Particle Brakes:
Refer to Nexen's Website
www.nexengroup.com
Magnetic Particle Brakes NBS-5 and NBS-10
Enter Product 911540 or 911541
TB800 Booster Amplifier
Enter Product 94542

NEXEN XTB TENSION CONTROL BRAKES

Cool performance for hotter profits.

The new airflow path design that keeps the XTB brake cool.

The caliper fins redirect dissipated heat out into space

It's just one feature of this brake that will help generate hotter profits. Its lower weight and rotational inertia will simplify installation and reduce web waste. Quick change components make maintenance a snap. Plus, Nexen technical service, parts and accessories are only a phone call away. No other tension control brake in the industry has such a comprehensive package of features. Affordably priced, the XTB series comes in various sizes to fit your application.

With all these features, it makes you wonder why you'd consider using any other tension control brake.

Keeping cool with the XTB airflow path.

Unlike other brake designs that can direct heat back into the brake, shaft and bearings, the XTB maximizes heat dissipation by deflecting it away from the brake components.

This unique airflow design uses fins on the rotor, hub back and calipers to throw dissipated heat into space, not into the brake or shaft. The design also helps draw cooler air around and over the brake.The new, one-piece lightweight rotor pulls cool air into the brake and draws it over the air hoses so they don't overheat and crack.

Note that air hoses run along the inner, not outer, circumference of the calipers. This keeps hose lengths to a minimum, to help protect them and keep them cool.

The airflow path then directs the air over the caliper fins. These fins redirect air out and away from the assembly.

Fins on the back of the hub also draw cool air back over the calipers to help cool the friction material and hoses.

Tests run with the brakes at maximum torque show the XTB shaft temperature at 140° F, (60° C), the shaft temperature of a competitive brake at 240° F, (115° C) .

Recommended shaft bearing temperatures are normally around 170 ° F, (76° C). If this heat is not directed away, it travels back into the brake and up the shaft to the bearings. This can cause brake fade, shaft crystallization and bearing seal meltdown.

Less weight for lower rotational inertia

Not only is Nexen's rotor lighter than other brake rotors, the entire brake weighs 40% of what other brakes weigh for up to 2/3 less rotational inertia. Lower weight and lower rotational inertia are critical because of the dynamics of the unwind roll. Tension is constant and the radius is changing constantly. Lower rotational inertia makes the XTB more precise at lower torques. This is especially important when running delicate materials that require precise tension, such as tissue or nylon.

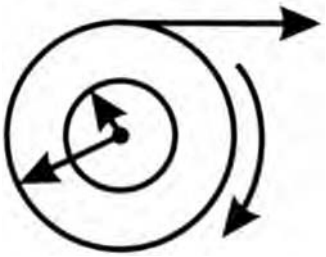

Unwind roll dynamics

$RPM = V/2\pi R$ V = product velocity (constant)
R = unwind roll radius

$I = wk^2$ I = inertia
w = weight
k = radius

Lower rotational inertia for less web waste

The XTB has up to 2/3 less rotational inertia than other brakes. Rotational inertia creates undesirable tension that can break your web before your material runs all the way to the core. And your web will break even earlier when running delicate materials.

Fins on the one-piece rotor help deflect hot air and draw cool air over the brake.

Why waste several hundred feet of product every roll due to breakage?

Precisely control each caliper pneumatically or electronically

There are 2 pistons that activate the friction pads on each caliper. Choose up to 9 calipers per brake, depending upon brake size.

Precise control of the air pressure to the calipers generates the low to high torque range. High torque maintains the tension needs on a large roll of material. Low torque yields the delicate control needed near the core.

You get this precision control by using Nexen's Three Stage Caliper Control to divide the number of XTB calipers into three groups, or stages.

Pneumatically control these stages individually or in combination. This gives you the effect of having several brakes with different torque ranges.

For the ultimate in precision unwind control, combine the Three Stage Caliper Control with a Nexen Electronic Tension Control System. Don't risk downtime by using another brake you can't accurately control.

For precise control, choose a Nexen pneumatic or electronic controller.

Choose from a full line of controllers

Choose either single caliper or three stage caliper control for pneumatic control. For electronic control, choose from several models that vary by programability, readout and control sophistication. Please consult Nexen for the best controller for your application.

Less weight for easier installation

40% less weight also makes XTB brakes easier to install and maintain. You will not need to adjust pad overhang or shim the pads for proper installation. A lighter brake also puts less strain on shafts, unwind rolls, bearings and stands.

Spring-loaded retaining pins make the friction pads easy to change

Friction pads change quickly without tools, springs or cotter keys.

Change the caliper friction pads by releasing two spring-loaded friction facing retaining pins that hold them in place. Replace them in seconds without tools, leaf springs, hitch pins. Pad retaining rod, pins or clips. There are no screws or cotter keys to remove or drop into the machinery. You do not even have to remove the caliper from the brake to change the friction pad.

Friction pads are completely interchangeable, so you won't need to stock different size pads for different size brakes. These features will maximize your uptime and keep maintenance simple.

Remove the disc without removing or disassembling the brake.

Change the disc without removing the brake from the shaft

Changing the disc on other brakes is no simple task. You must remove the brake from the shaft and mark the location for the new disc. Then you must disassemble it until you have enough access to remove the old disc. With the XTB, you can change the disc by pulling it from the shaft without removing the entire brake. The new disc can be installed without marking the disc location because the hub stays locked and located on the shaft.

Nexen Kits and Accessories

For information on Nexen kits, accessories or parts, including complete assemblies or individual rotors, hubs, mounting plates, friction pad kits or brake guards, call 800-843-7445.

GUARD

ROTOR/HUB/MOUNTING PLATE ASSEMBLY

FRICTION PAD KIT

CALIPER ASSEMBLY

Cool performance for hotter profits

The XTB brake gives you superior heat dissipation for worry-free performance, less weight for lower rotational inertia, and easier installation and maintenance. All this plus technical service from the folks who have been designing and manufacturing pneumatically actuated brakes for over 50 years. Add this to a full line of web controlling products with technical service to match and you won't go anywhere else for your web tension needs.

XTB Cooling Enhancement

Increase heat dissipation at lower RPMs for increased performance without upgrading brake size. This squirrel cage fan mounts on the brake guard and blows air onto the hub and deflects heat out through the disc. Use it at lower RPMs when the rotor is less effective at dissipating heat because of the lower speed. Works on all XTB tension control brakes. Operates on 110 volts. Don't buy a larger brake just to get higher heat dissipation specifications. Try this cooling enhancement first!

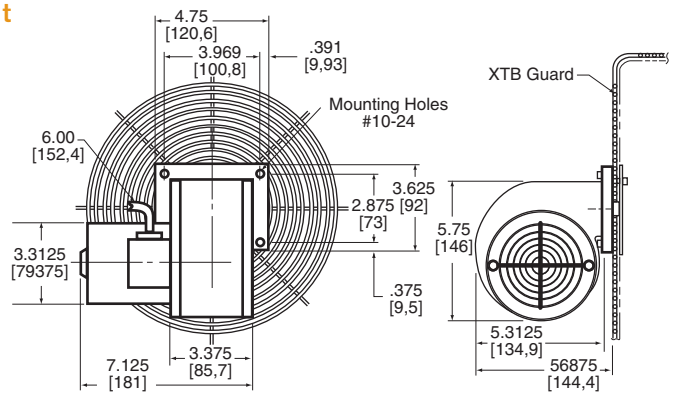

Ordering Information

Model	Product Number	Shipping Wt. Lbs.[kg]
XTB Cooling Enhancement	835175	6.0 [2,7]

TCB 7 *Tension Control Brakes*

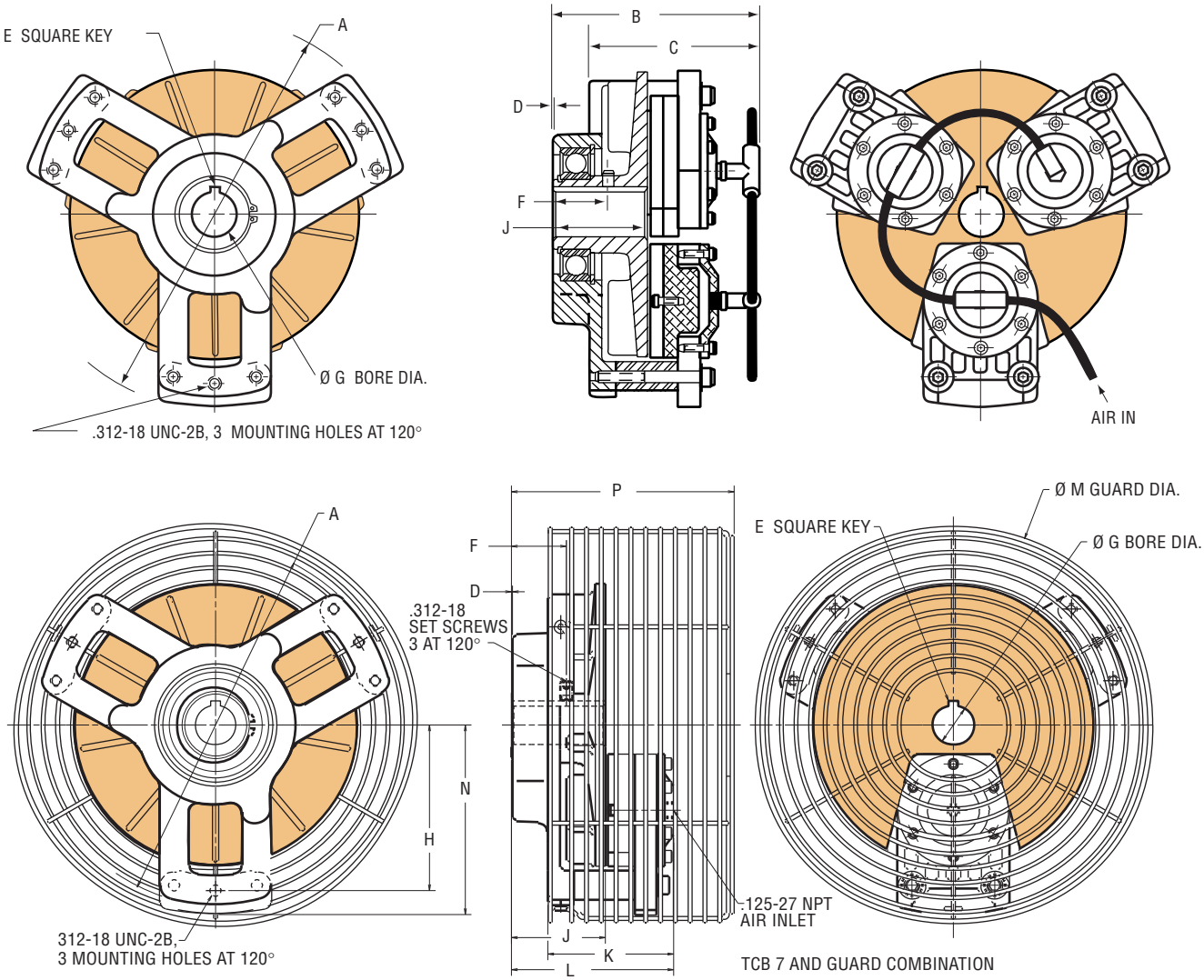

Note: Dimensions in INCHES [MM]

MODEL	A	B	C	D	E *	F	G	H	J	K	L	M	N	P
TCB 7	Ø 9.25	5.32	4.38	.03	.25 STD	1.41	1.125 $^{+.001}_{-.000}$	4.25	2.41	3.23	4.16	10.23	4.87	5.71
	Ø [235]	[135]	[111]	[0,76]	[6,35]	[35,8]	[28,6 $^{+.03}_{-.00}$]	[108,0]	[61,2]	[82,0]	[105,7]	[259,8]	[123,6]	[145,1]

* Bored-to-size rotors available upon request. See Bore & Keyway Dimensions.

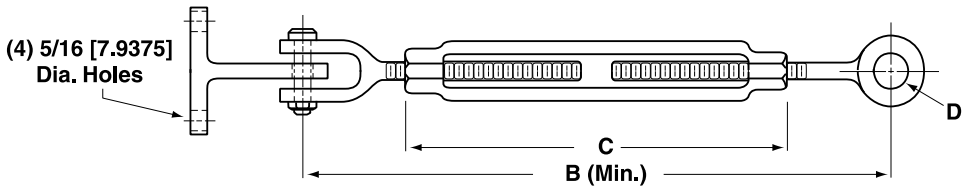

TORQUE ARM

Dimension	A	B	C	D
CUSTOMARY, INCH	14-3/8	10-3/8	7-1/8	17/32
METRIC, MM	[365,13]	[263,53]	[180,98]	[13,49]

TCB 7 *Tension Control Brakes*

TCB 7 TORQUE (INCH POUNDS)

Number of Calipers	Coefficient of Friction			
	0.15 (LoCo)		0.35 (Std)	
	80 PSI	1 PSI	80 PSI	1 PSI
1	80	2	140	4
2	160	4	280	8
3	240	6	420	12

Note: Rated torque may vary depending on operating conditions. Friction coefficients are nominal

THERMAL DISSIPATION VS RPM

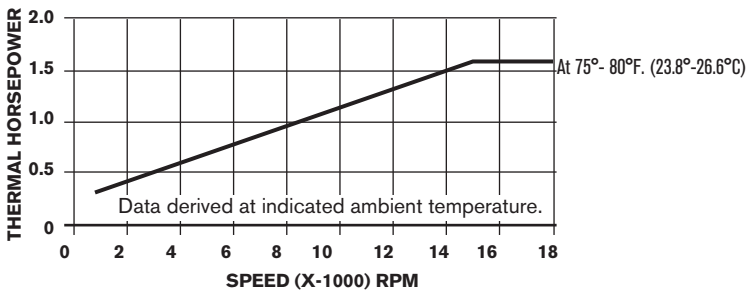

TCB 7 TORQUE (NEWTON METERS)

Number of Calipers	Coefficient of Friction			
	0.15 (LoCo)		0.35 (Std)	
	550 kPa	7 kPa	550 kPa	7 kPa
1	9	0,2	16	0,5
2	18	0,5	32	0,9
3	27	0,7	48	1,4

METRIC THERMAL DISSIPATION VS RPM

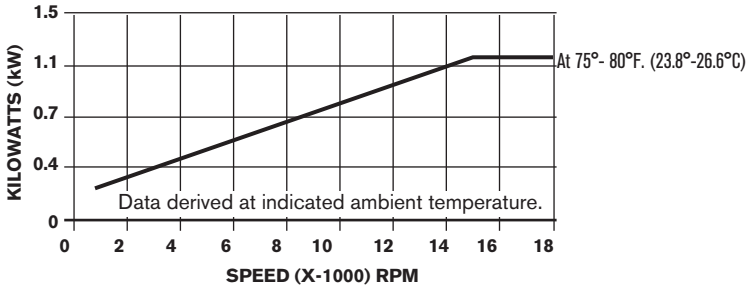

TCB 7 ORDERING INFORMATION

Model	Product Number	Speed Up To RPM [MM]	Coefficient of Friction	Hub Bore Diameter INCHES [MM]	Rotor Inertia Lb.Ft² [Kgm²]	Shipping Wt. lbs. [Kg]
TCB 7	835122	4000	0.35 (Std.) [9]	1.125 [28,575]	0.229 [0,010]	16.0 [0,51]
TCB 7	835129	4000	0.22 (LoCo) [5,58]	1.125 [28,575]	0.229 [0,010]	16.0 [0,51]

TCB 7 ACCESSORIES

For Model	Product Number	Description	Shipping Wt. lbs. [Kg]
TCB 7 with Std. Bore	835123	Bushing 0.75" (19,05 mm) Bore	1.0 [0,45]
	835124	Bushing 0.875" (22,23 mm) Bore	1.0 [0,45]
	835125	Bushing 1.0" (25,40 mm) Bore	1.0 [0,45]
	835165	Torque Arm (For TCB 7 only)	1.0 [0,45]
	835127	Facing Kit, Standard	1.5 [0,68]
	835128	Facing Kit, LoCo	1.5 [0,68]
	835186	Guard	15.0 [6,80]
	835182	Ring Guard	–

XTB 10A & XTB 10 *Tension Control Brakes*

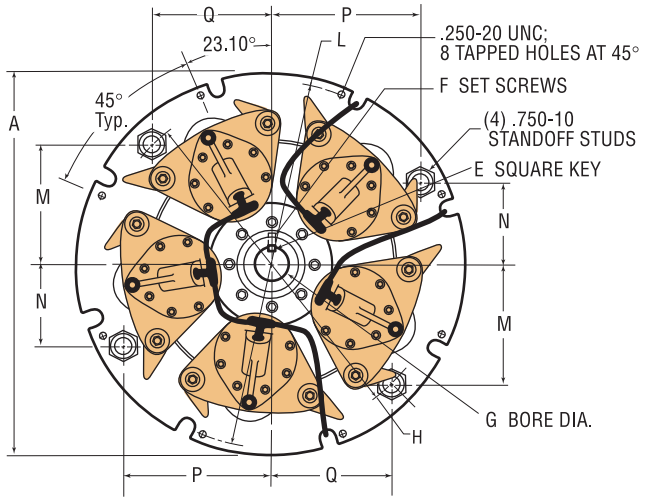

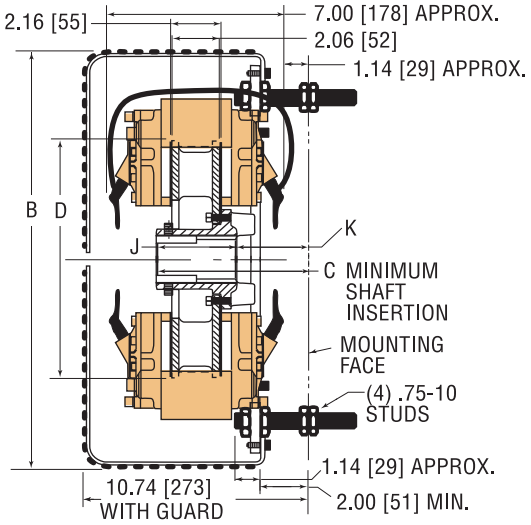

Note:
Dimensions in
INCHES
[MM]

MODEL	A W/OUT GUARD	B WITH GUARD	C	D	E *	F	G BORE RANGES * STD.	MIN.	MAX	H	J	K	L	M	N	P	Q
XTB 10A & XTB 10	16.00 [406]	17.25 [438]	6.30 [160]	10.0 [254]	.312 STD [8]	(3) .375-16 [9,525]	1.375 [35]	1.125 [29]	1.625 [41]	14.05 [357]	3.313 [84]	2.99 [76]	15.19 [386]	4.97 [126]	3.43 [87]	6.13 [156]	4.97 [126]

* Bored-to-size rotors available upon request. See Bore & Keyway Dimensions.

XTB 10A & XTB 10 TORQUE (INCH POUNDS)

Number of Calipers	Coefficient of Friction 0.15 (LoCo) 80 PSI	0.15 (LoCo) 1 PSI	0.30 (Std) 80 PSI	0.30 (Std) 1 PSI
1	458	6	662	9
2	916	11	1340	16
3	1374	17	2010	25
4	1832	23	2680	34
5	2290	29	3350	42

Note: Rated torque may vary depending on operating conditions.
Friction coefficients are nominal

XTB 10A & XTB 10 TORQUE (NEWTON METERS)

Number of Calipers	Coefficient of Friction 0.15 (LoCo) 550 kPa	0.15 (LoCo) 7 kPa	0.30 (Std) 550 kPa	0.30 (Std) 7 kPa
1	52	0,7	76	0,9
2	104	1,2	151	1,8
3	155	1,9	227	2,8
4	207	2,6	303	3,8
5	259	3,3	378	4,7

Torque Values for Ultra LoCo "Facings
Multily "LoCo" torque by 0.67 for the torque with Ultra LoCo facings.

Cross Drilled XTB 10A vs. XTB 10 THERMAL HORSEPOWER vs. SPEED (Speed Limited to 3400 RPM)

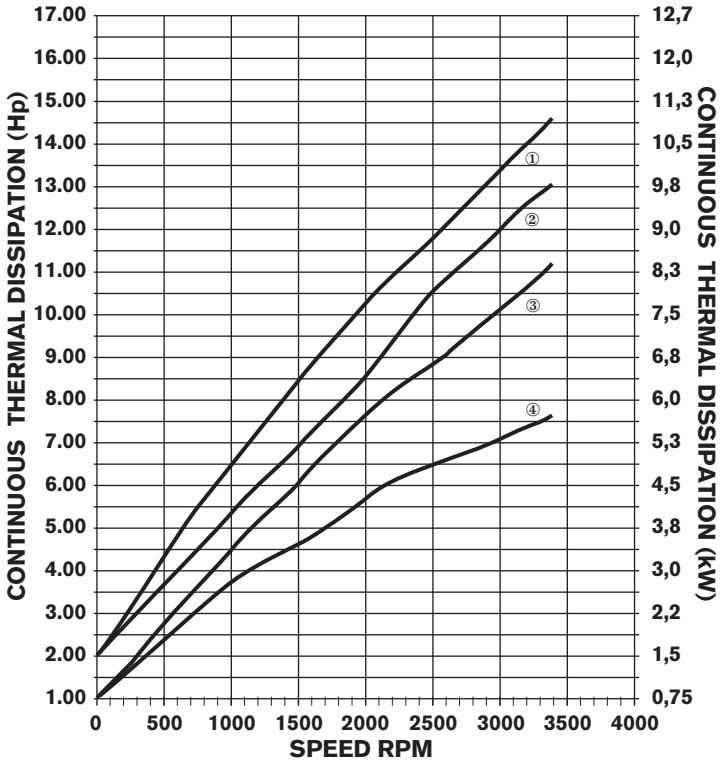

① XTB 10A, Optimum HP_t, Cross-Drilled Rotor ② XTB 10, Optimum HP_t, Standard Rotor
③ XTB 10A, Optimum Facing Wear, Cross-Drilled Rotor ④ XTB 10, Optimum Facing Wear, Standard Rotor

XTB 10A & XTB 10 *Tension Control Brakes*

BORE AND KEYWAY DIMENSIONS

Bore Range	Key (Square)	Keyway Tolerance
1.125 – 1.250 [28,58 – 29,21]	0.250 [6,35]	+.002 –.000 [+0,05 – 0,0]
1.312 – 1.375 [33,32 – 34,92]	0.312 [7,92]	+.002 –.000 [+0,05 – 0,0]
1.437 – 1.625 [36,50 – 41,28]	0.375 [9,53]	+.002 –.000 [+0,05 – 0,0]

Note: Bushings not acceptable for XTB applications. Bore sizes not indicated are available (see Min./Max. ranges on dimensional drawing).

ORDERING INFORMATION

XTB Tension Controlled Brakes are custom assembled for each application. Consult with Nexen Technical Service to determine your exact needs.

Quantity	Description	Shipping Wt. Lbs. [Kg]
1	Rotor, Hub, & Mounting Plate Assembly	See below
1–5	Caliper Assemblies as required	See below
1–5	Friction Facing Kits as required	See below
1	Guard (Product No. 835446)	17 [7,7]

ROTOR, HUB & MOUNTING PLATE

Best thermal dissipation if brake is ordered for direction of rotation. Reduce by 10% for 0-500 RPM and reduce by 25% for 501-1800 RPM.

Model (CCW)	Hub Bore Diameter INCHES [MM]	Product Number	Model (CW)	Hub Bore Diameter INCHES [MM]	Product Number	Max. RPM	Rotor Inertia Lb.Ft² [Kgm²]	Shipping Wt. Lbs. [Kg]
XTB 10A XTB 10	1.125 [28,57]	835651 835402	XTB 10A XTB 10	1.125 [28,57]	835650 835401	4000	1.69 [0,07]	39 [17,7]
XTB 10A XTB 10	1.375 [35]	835653 835404	XTB 10A XTB 10	1.375 [35]	835652 835403	4000	1.69 [0,07]	39 [17,7]
XTB 10A XTB 10	1.625 [41,2]	835655 835405	XTB 10A XTB 10	1.625 [41,2]	835654 835405	4000	1.69 [0,07]	39 [17,7]

NOTE: XTB 10A Rotors are Cross-Drilled for Optimum Thermal Dissipation.

CALIPER ASSEMBLIES

Each caliper assembly has two caliper halves. Order one caliper assembly for each caliper position. The number of caliper positions is determined by your torque requirements.

Model	Product Number	Description	Shipping Wt. Lbs. [Kg]
XTB 10	835451	1 Caliper Assembly	4.5 [2]

FACING KITS–ALL MODELS

Facing kits contain two asbestos-free facings of organic, low coefficient of friction, standard coefficient of friction or low dust Kevlar®. One facing kit per caliper assembly is required.

Facing Kits	Ultra LoCo (0.10) Product No.	LoCo (0.15) Product No.	STD. (0.30) Kevlar® Product No.	Shipping Wt. Lbs. [Kg]
1	835643	835471	835631 ①	1.00 [0,45]

① Use 'Optimum Facing Wear' Thermal Curves.
Kevlar® is a registered trademark of DuPont Company.

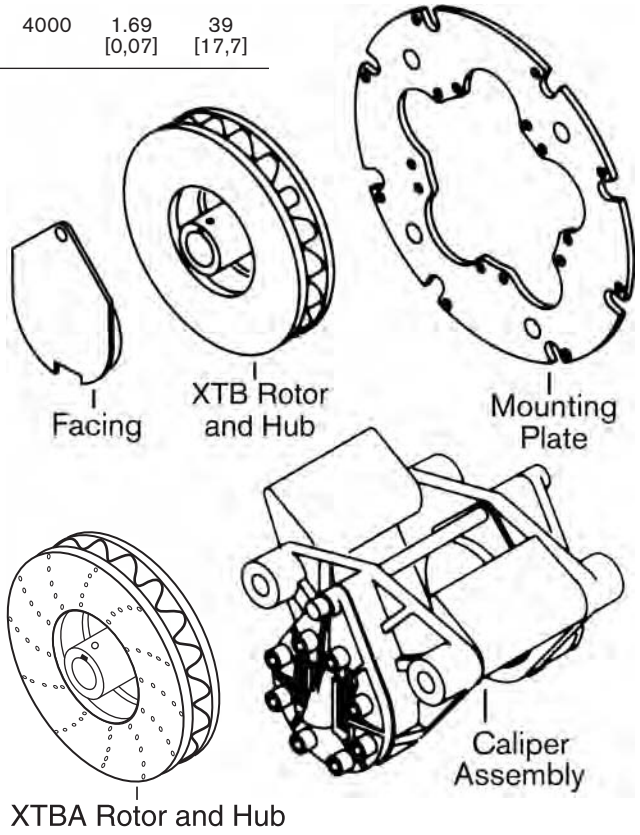

XTB 12A & XTB 12 *Tension Control Brakes*

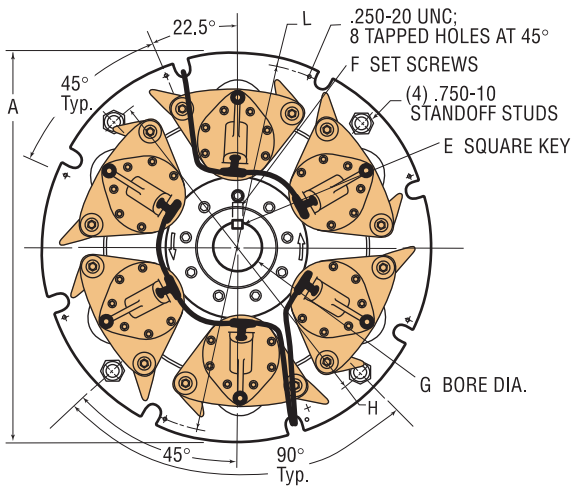

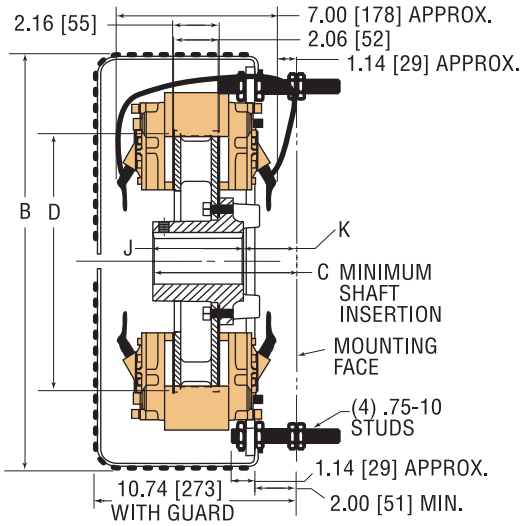

Note:
Dimensions in
INCHES
[MM]

MODEL	A W/OUT GUARD	B WITH GUARD	C	D	E *	F	G BORE RANGES * STD.	MIN.	MAX	H	J	K	L
XTB 12A & XTB 12	17.81 [452]	19.06 [484]	6.64 [118]	12.0 [305]	.375 STD [9,525]	(3) .500-13 [12.7]	1.625 [41]	1.250 [32]	2.125 [54]	16.0 [4064]	4.125 [105]	2.52 [64]	17.00 [432]

* Bored-to-size rotors available upon request. See Bore & Keyway Dimensions.

XTB 12A & XTB 12 TORQUE (INCH POUNDS)

Number of Calipers	Coefficient of Friction 0.15 (LoCo) 80 PSI	0.15 (LoCo) 1 PSI	0.30 (Std) 80 PSI	0.30 (Std) 1 PSI
1	573	7	837	10
2	1145	14	1674	21
3	1718	21	2511	32
4	2290	29	3348	42
5	2863	36	4186	52
6	3435	43	5022	63

Note: Rated torque may vary depending on operating conditions.
Friction coefficients are nominal

XTB 12A & XTB 12 TORQUE (NEWTON METERS)

Number of Calipers	Coefficient of Friction 0.15 (LoCo) 550 kPa	0.15 (LoCo) 7 kPa	0.30 (Std) 550 kPa	0.30 (Std) 7 kPa
1	65	0,8	95	2,3
2	129	1,6	189	2,3
3	194	2,4	284	3,6
4	259	3,3	378	4,7
5	324	4,1	473	5,9
6	388	4,9	568	7,1

Torque Values for Ultra LoCo "Facings
Multily "LoCo" torque by 0.67 for the torque with Ultra LoCo facings.

Cross Drilled XTB 12A vs. XTB 12 THERMAL HORSEPOWER vs. SPEED (Speed Limited to 2800 RPM)

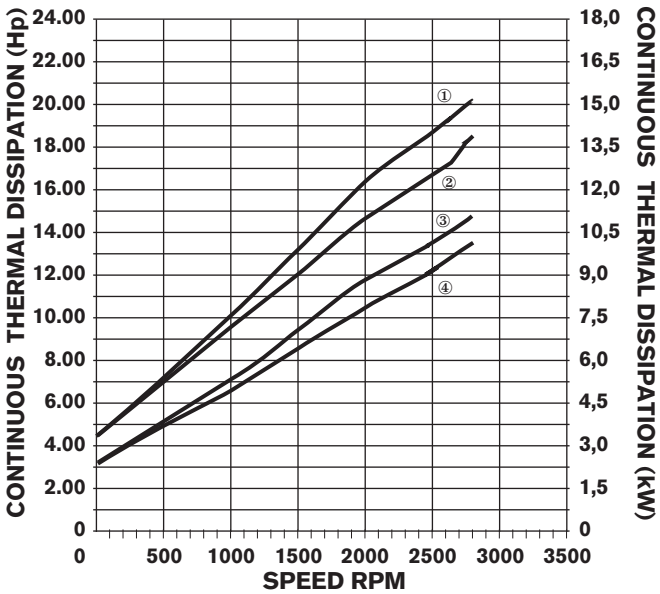

① XTB 12A, Optimum HP_t, Cross-Drilled Rotor ② XTB 12, Optimum HP_t, Standard Rotor
③ XTB 12A, Optimum Facing Wear, Cross-Drilled Rotor ④ XTB 12, Optimum Facing Wear, Standard Rotor

XTB 12A & XTB 12 *Tension Control Brakes*

BORE AND KEYWAY DIMENSIONS

Bore Range	Key (Square)	Keyway Tolerance
1.250 [29,21]	0.250 [6,35]	+.002 –.000 [+0,05 – 0,0]
1.312 – 1.375 [33,32 – 34,92]	0.312 [7,92]	+.003 –.000 [+0,07 – 0,0]
1.437 – 1.750 [36,50 – 44,45]	0.375 [9,53]	+.003 –.000 [+0,07 – 0,0]
1.812 – 2.125 [46,02 – 53,98]	0.500 [12,7]	+.003 –.000 [+0,07 – 0,0]

Note: Bushings not acceptable for XTB applications. Bore sizes not indicated are available (see Min./Max. ranges on dimensional drawing).

ORDERING INFORMATION

XTB Tension Controlled Brakes are custom assembled for each application. Consult with Nexen Technical Service to determine your exact needs.

Quantity	Description	Shipping Wt. Lbs. [Kg]
1	Rotor, Hub, & Mounting Plate Assembly	See below
1–6	Caliper Assemblies as required	See below
1–6	Friction Facing Kits as required	See below
1	Guard (Product No. 835447)	17 [7,7]

ROTOR, HUB & MOUNTING PLATE

Best thermal dissipation if brake is ordered for direction of rotation. Reduce by 10% for 0-500 RPM and reduce by 25% for 501-1800 RPM.

Model (CCW)	Hub Bore Diameter INCHES [MM]	Product Number	Model (CW)	Hub Bore Diameter INCHES [MM]	Product Number	Max. RPM	Rotor Inertia Lb.Ft² [Kgm²]	Shipping Wt. Lbs. [Kg]
XTB 12A XTB 12	1.25 [32]	835657 835412	XTB 12A XTB 12	1.25 [32]	835656 835411	3300	3.60 [0,15]	60 [27,2]
XTB 12A XTB 12	1.625 [41,2]	835659 835414	XTB 12A XTB 12	1.625 [41,2]	835658 835413	3300	3.60 [0,15]	60 [27,2]
XTB 12A XTB 12	2.125 [54]	835661 835416	XTB 12A XTB 12	2.125 [54]	835660 835415	3300	3.60 [0,15]	53 [24,0]

NOTE: XTB 12A Rotors are Cross-Drilled for Optimum Thermal Dissipation.

CALIPER ASSEMBLIES

Each caliper assembly has two caliper halves. Order one caliper assembly for each caliper position. The number of caliper positions is determined by your torque requirements.

Model	Product Number	Description	Shipping Wt. Lbs. [Kg]
XTB–12	835451	1 Caliper Assembly	4.5 [2]

FACING KITS–ALL MODELS

Facing kits contain two asbestos-free facings of organicUltra LoCo, low coefficient or friction, or standard coefficient of friction low dust Kevlar®. One facing kit per caliper assembly is required.

Facing Kits	Ultra LoCo (0.10) Product No.	LoCo (0.15) Product No.	STD. (0.30) Kevlar* Product No.	Shipping Wt. Lbs. [Kg]
1	835643	835471	835631①	1.00 [0,45]

① Use 'Optimum Facing Wear' Thermal Curves.
Kevlar® is a registered trademark of DuPont Company.

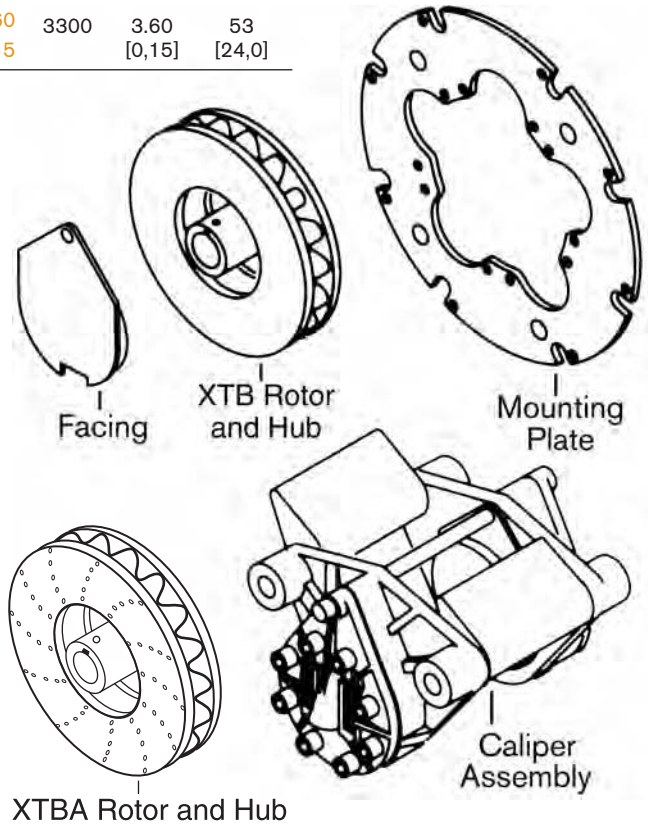

XTB 14A & XTB 14 *Tension Control Brakes*

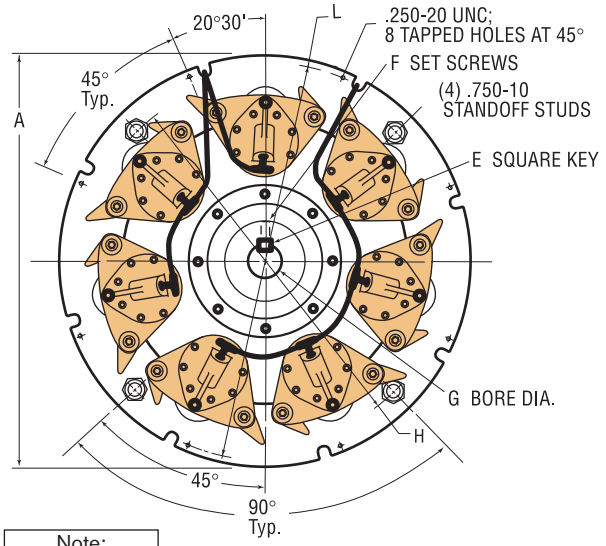

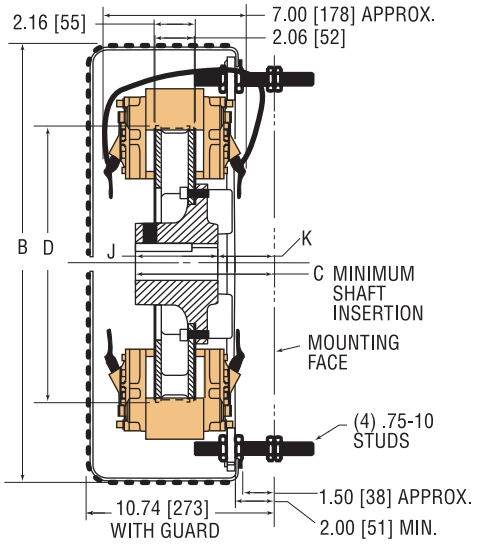

Note:
Dimensions in
INCHES
[MM]

MODEL	A W/OUT GUARD	B WITH GUARD	C	D	E *	F	G BORE RANGES * STD.	MIN.	MAX	H	J	K	L
XTB 14A & XTB 14	20.75 [527]	22.06 [560]	6.64 [169]	14.0 [356]	.500 STD [12,7]	(3) .500-13 [12,7]	1.937 [49]	1.625 [41]	2.500 [63,5]	18.5 [470]	4.125 [105]	2.52 [64]	20.00 [508]

* Bored-to-size rotors available upon request. See Bore & Keyway Dimensions.

XTB 14A & XTB 14 TORQUE (INCH POUNDS)

Number of Calipers	Coefficient of Friction 0.15 (LoCo) 80 PSI	0.15 (LoCo) 1 PSI	0.30 (Std) 80 PSI	0.30 (Std) 1 PSI
1	687	9	1116	14
2	1374	17	2233	28
3	2061	26	3348	42
4	2748	34	4464	56
5	3435	43	5580	70
6	4122	52	6697	83
7	4809	60	7813	98

Note: Rated torque may vary depending on operating conditions.
Friction coefficients are nominal

XTB 14A & XTB 14 TORQUE (NEWTON METERS)

Number of Calipers	Coefficient of Friction 0.15 (LoCo) 550 kPa	0.15 (LoCo) 7 kPa	0.30 (Std) 550 kPa	0.30 (Std) 7 kPa
1	78	1	126	1,5
2	155	1,9	252	3,1
3	233	2,9	378	4,7
4	311	3,8	505	6,3
5	388	4,9	630	7,8
6	466	5,9	757	9,5
7	543	6,8	883	11,1

Torque Values for Ultra LoCo "Facings
Multily "LoCo" torque by 0.67 for the torque with Ultra LoCo facings.

Cross Drilled XTB 14A vs. XTB 14 THERMAL HORSEPOWER vs. SPEED (Speed Limited to 2400 RPM)

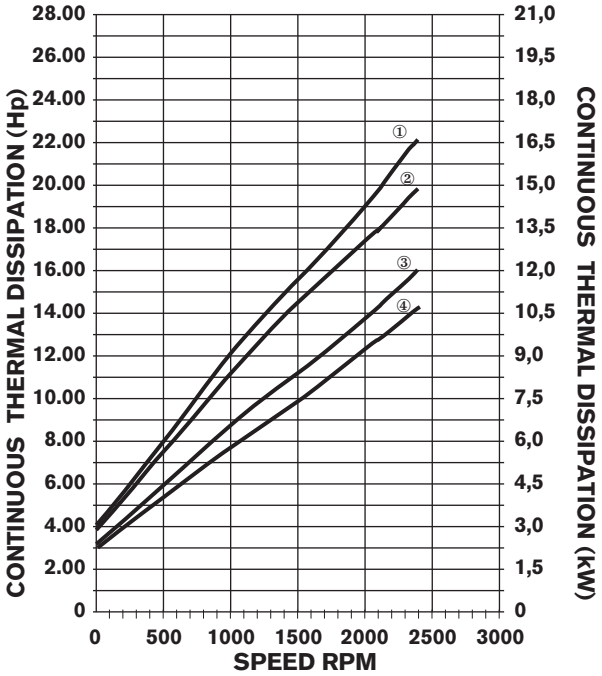

① XTB 14A, Optimum HP_t, Cross-Drilled Rotor ② XTB 14, Optimum HP_t, Standard Rotor
③ XTB 14A, Optimum Facing Wear, Cross-Drilled Rotor ④ XTB 14, Optimum Facing Wear, Standard Rotor

XTB 14A & XTB 14 *Tension Control Brakes*

BORE AND KEYWAY DIMENSIONS

Bore Range	Key (Square)	Keyway Tolerance
1.250 [29,21]	0.250 [6,35]	+.002 –.000 [+0,05 – 0,0]
1.312 – 1.375 [33,32 – 34,92]	0.312 [7,92]	+.003 –.000 [+0,07 – 0,0]
1.437 – 1.750 [36,50 – 44,45]	0.375 [9,53]	+.003 –.000 [+0,07 – 0,0]
1.812 – 2.125 [46,02 – 53,98]	0.500 [12,7]	+.003 –.000 [+0,07 – 0,0]

Note: Bushings not acceptable for XTB applications. Bore sizes not indicated are available (see Min./Max. ranges on dimensional drawing).

ORDERING INFORMATION

XTB Tension Controlled Brakes are custom assembled for each application. Consult with Nexen Technical Service to determine your exact needs.

Quantity	Description	Shipping Wt. Lbs. [Kg]
1	Rotor, Hub, & Mounting Plate Assembly	See below
1–7	Caliper Assemblies as required	See below
1–7	Friction Facing Kits as required	See below
1	Guard (Product No. 835448)	17 [7,7]

ROTOR, HUB & MOUNTING PLATE

Best thermal dissipation if brake is ordered for direction of rotation. Reduce by 10% for 0-500 RPM and reduce by 25% for 501-1800 RPM.

Model (CCW)	Hub Bore Diameter INCHES [MM]	Product Number	Model (CW)	Hub Bore Diameter INCHES [MM]	Product Number	Max. RPM	Rotor Inertia Lb.Ft² [Kgm²]	Shipping Wt. Lbs. [Kg]
XTB 14A XTB 14	1.625 [41,2]	835663 835422	XTB 14A XTB 14	1.625 [41,2]	835662 835421	3000	6.80 [0,28]	80 [36,3]
XTB 14A XTB 14	1.9375 [49,2]	835665 835424	XTB 14A XTB 14	1.9375 [49,2]	835664 835423	3000	6.80 [0,28]	82 [37,2]
XTB 14A XTB 14	2.50 [64]	835667 835426	XTB 14A XTB 14	2.50 [64]	835666 835425	3000	6.80 [0,28]	77 [35,0]

NOTE: XTB 14A Rotors are Cross-Drilled for Optimum Thermal Dissipation.

CALIPER ASSEMBLIES

Each caliper assembly has two caliper halves. Order one caliper assembly for each caliper position. The number of caliper positions is determined by your torque requirements.

Model	Product Number	Description	Shipping Wt. Lbs. [Kg]
XTB 14	835451	1 Caliper Assembly	4.5 [2]

FACING KITS–ALL MODELS

Facing kits contain two asbestos-free facings of organic Ultra LoCo, low coefficient of friction, or standard coefficient of friction low dust Kevlar®. One facing kit per caliper assembly is required.

Facing Kits	Ultra LoCo (0.10) Product No.	LoCo (0.15) Product No.	STD. (0.30) Kevlar® Product No.	Shipping Wt. Lbs. [Kg]
1	835643	835471	835631①	1.00 [0,45]

① Use 'Optimum Facing Wear' Thermal Curves.
Kevlar® is a registered trademark of DuPont Company.

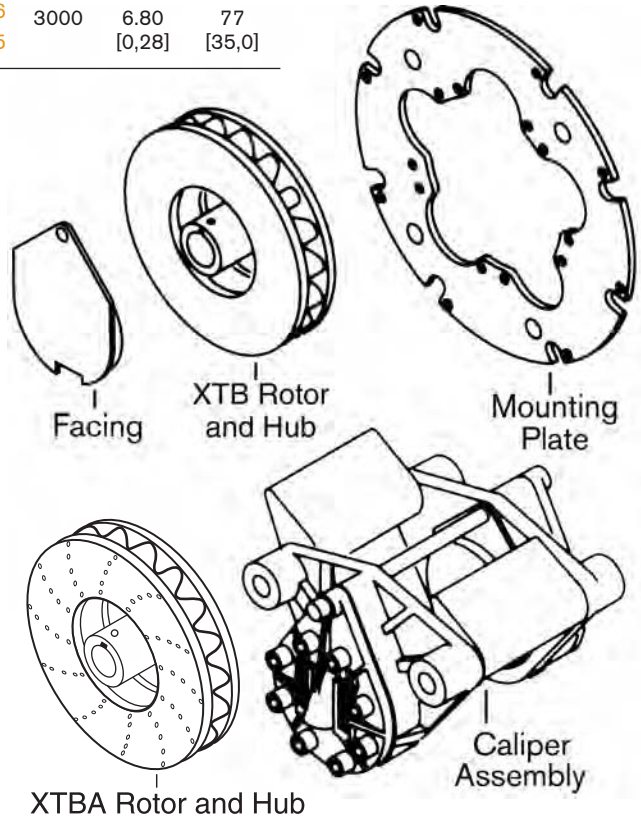

XTB 18A, XTB 18 & XTB 18 DUAL *Tension Control Brakes*

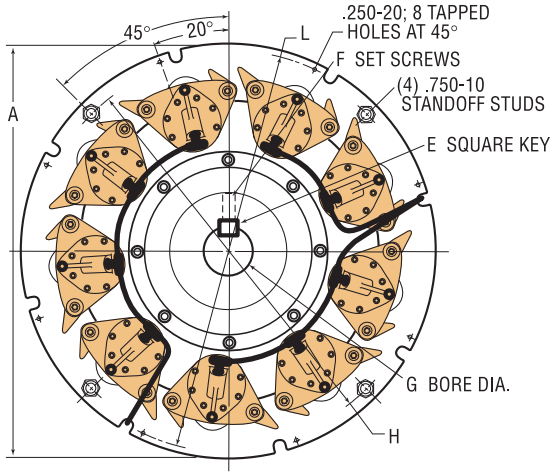

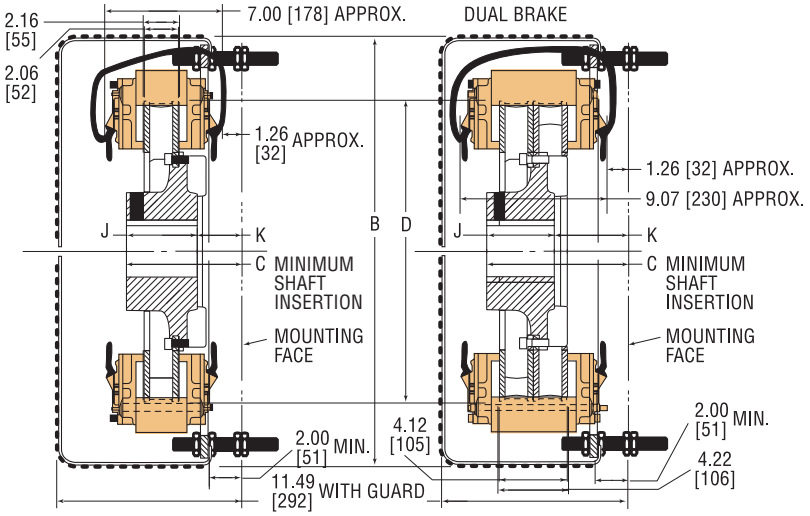

Note: Dimensions in INCHES [MM]

MODEL	A W/OUT GUARD	B WITH GUARD	C	D	E *	F	G BORE RANGES * STD.	MIN.	MAX	H	J	K	L
XTB 18A & XTB 18	24.50 [622]	25.88 [657]	7.29 [185]	18.0 [457]	.750 STD [19]	(3) .750-10 [19]	2.937 [74,5]	2.500 [63,5]	4.500 [114]	23.0 [584]	4.12 [105]	3.17 [80,5]	23.82 [605]
XTB 18 DUAL	24.50 [622]	25.88 [657]	8.64 [219]	18.0 [457]	.750 STD [19]	(3) .750-10 [19]	2.937 [74,5]	2.500 [63,5]	4.500 [114]	23.0 [584]	4.12 [105]	4.52 [115]	23.82 [605]

* Bored-to-size rotors available upon request. See Bore & Keyway Dimensions.

XTB 18A, XTB 18 AND XTB 18 DUAL TORQUE (INCH POUNDS)

Number of Calipers	Coefficient of Friction 0.15 (LoCo) 80 PSI	0.15 (LoCo) 1 PSI	0.30 (Std) 80 PSI	0.30 (Std) 1 PSI
1	883	11	1363	17
2	1767	22	2726	34
3	2650	33	4089	51
4	3533	44	5453	68
5	4417	55	6816	85
6	5300	66	8180	102
7	6184	77	9543	120
8	7067	88	10906	137
9	7950	99	12269	153

Note: Rated torque may vary depending on operating conditions.
Friction coefficients are nominal

XTB 18A, XTB 18 AND XTB 18 DUAL TORQUE (NEWTON METERS)

Number of Calipers	Coefficient of Friction 0.15 (LoCo) 550 kPa	0.15 (LoCo) 7 kPa	0.30 (Std) 550 kPa	0.30 (Std) 7 kPa
1	100	1,2	154	2
2	200	2,5	308	4
3	299	3,7	462	6
4	399	5	616	8
5	499	6,2	771	10
6	599	7,5	925	12
7	699	8,7	1078	14
8	799	9,9	1232	16
9	898	11,2	1386	18

Torque Values for Ultra LoCo "Facings
Multily "LoCo" torque by 0.67 for the torque with Ultra LoCo facings.

Cross Drilled XTB 18A vs. XTB 18 & XTB 18 DUAL THERMAL HORSEPOWER vs. SPEED (Speed Limited to 1900 RPM)

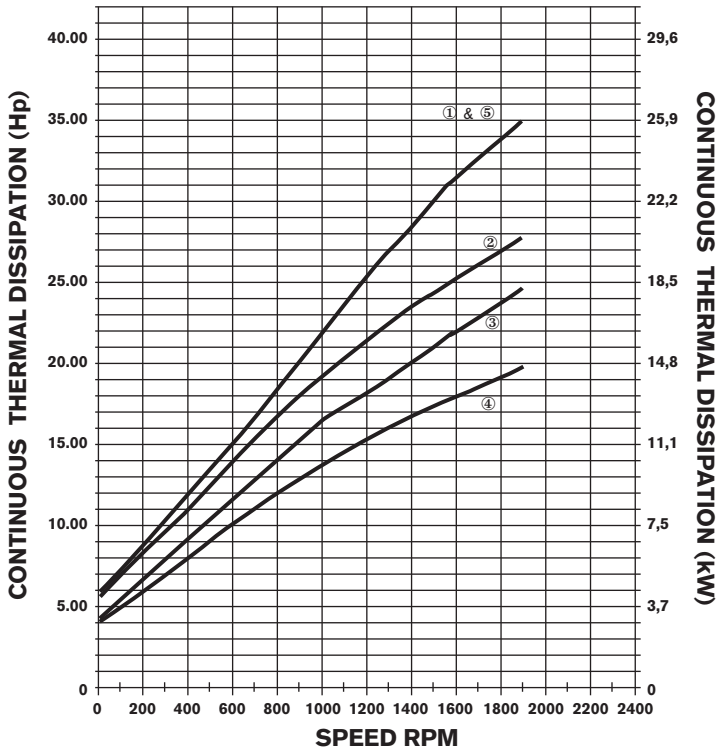

① XTB 18A, Optimum HP_t, Cross-Drilled Rotor ② XTB 18, Optimum HP_t, Standard Rotor
③ XTB 18A, Optimum Facing Wear, Cross-Drilled Rotor ④ XTB 18, Optimum Facing Wear, Standard Rotor
⑤ XTB 18 Dual, Optimum Facing Wear, Standard Rotor

XTB 18A, XTB 18 & XTB 18 DUAL *Tension Control Brakes*

BORE AND KEYWAY DIMENSIONS

Bore Range	Key (Square)	Keyway Tolerance
2.500 – 2.750 [63,50 – 69,85]	0.625 [15,87]	+.003 –.000 [+0,076 –0,00]
2.812 – 3.250 [71,42 – 82,55]	0.750 [19,05]	+.003 –.000 [+0,076 –0,00]
3.312 – 3.750 [84,12 – 95,25]	0.875 [22,22]	+.004 –.000 [+0,101 –0,00]
3.812 – 4.500 [96,82 – 114,3]	1.000 [25,40]	+.004 –.000 [+0,101 –0,00]

Note: Bushings not acceptable for XTB applications. Bore sizes not indicated are available (see Min./Max. ranges on dimensional drawing).

ORDERING INFORMATION

XTB Tension Controlled Brakes are custom assembled for each application. Consult with Nexen Technical Service to determine your exact needs.

Quantity	Description	Shipping Wt. Lbs. [Kg]
1	Rotor, Hub, & Mounting Plate Assembly	See below
1–9	Caliper Assemblies as required	See below
1–9	Friction Facing Kits as required	See below
1	XTB 18 Guard (Product No. 835444)	17 [7,7]
1	XTB 18 Dual Guard (Product No. 835445)	17 [7,7]

ROTOR, HUB & MOUNTING PLATE

Best thermal dissipation if brake is ordered for direction of rotation. Reduce by 10% for 0-500 RPM and reduce by 25% for 501-1800 RPM.

Model (CCW)	Hub Bore Diameter INCHES [MM]	Product Number	Model (CW)	Hub Bore Diameter INCHES [MM]	Product Number	Max. RPM	Rotor Inertia Lb.Ft² [Kgm²]	Shipping Wt. Lbs. [Kg]
XTB 18 XTB 18A	2.50 [63,5]	835669 835432	XTB 18 XTB 18A	2.50 [63,5]	835668 835431	2300	20.14 [0,84]	123 [55,7]
XTB 18 DUAL	2.50 [63,5]	835671 835492	XTB 18 DUAL	2.50 [63,5]	835670 835491	2300	35.95 [1,51]	168 [76,2]
XTB 18 XTB 18A	2.9375 [74,6]	835673 835434	XTB 18 XTB 18A	2.9375 [74,6]	835672 835433	2300	20.14 [0,84]	122 [55,3]
XTB 18 DUAL	2.9375 [74,6]	835494	XTB 18 DUAL	2.9375 [74,6]	835493	2300	35.95 [1,51]	167 [75,7]
XTB 18 XTB 18A	4.50 [114]	835436	XTB 18 XTB 18A	4.50 [114]	835435	2300	20.14 [0,84]	121 [54,9]
XTB 18 DUAL	4.50 [114]	835496	XTB 18 DUAL	4.50 [114]	835495	2300	35.95 [1,51]	166 [75,3]

NOTE: XTB 18A Rotors are Cross-Drilled for Optimum Thermal Dissipation.

CALIPER ASSEMBLIES

Each caliper assembly has two caliper halves. Order one caliper assembly for each caliper position. The number of caliper positions is determined by your torque requirements.

Model	Product Number	Description	Shipping Wt. Lbs. [Kg]
XTB 18	835451	1 Caliper Assembly	4.5 [2]
XTB 18 DUAL	835500	1 Caliper Assembly	5 [2,3]

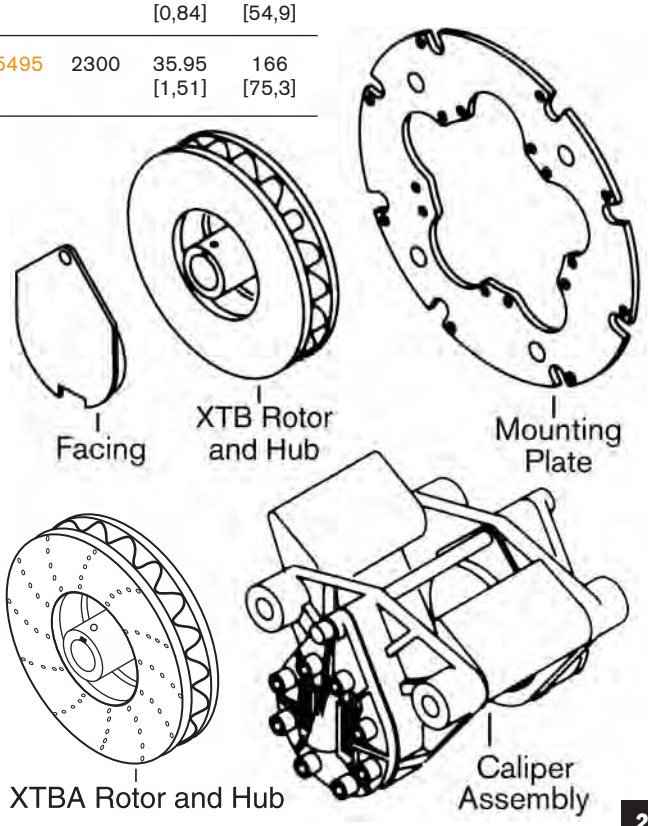

FACING KITS–ALL MODELS

Facing kits contain two asbestos-free facings of organic Ultra LoCo, low coefficient of friction, or standard coefficient of friction low dust Kevlar®. One facing kit per caliper assembly is required.

Facing Kits	Ultra LoCo (0.10) Product No.	LoCo (0.15) Product No.	STD. (0.30) Kevlar® Product No.	Shipping Wt. Lbs. [Kg]
1	835643	835471	835631①	1.00 [0,45]

① Use 'Optimum Facing Wear' Thermal Curves.
Kevlar® is a registered trademark of DuPont Company.

XTB 22 & XTB 22 DUAL *Tension Control Brakes*

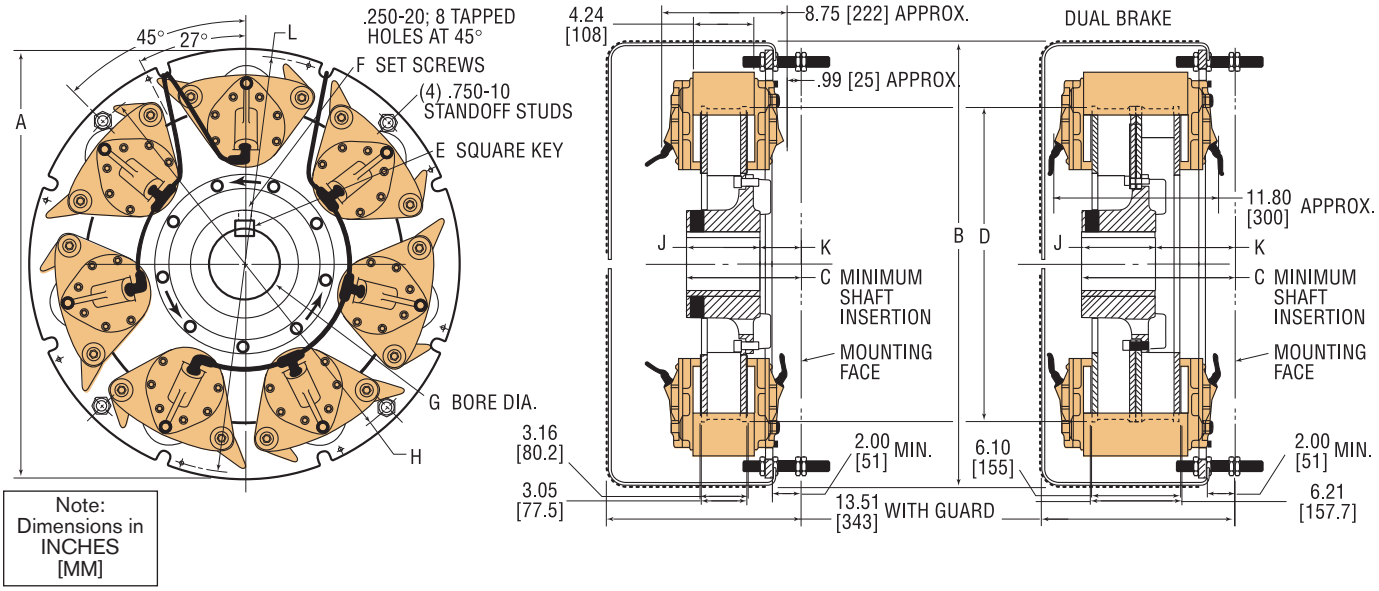

Note: Dimensions in INCHES [MM]

MODEL	A W/OUT GUARD	B WITH GUARD	C	D	E *	F	G BORE RANGES * STD.	MIN.	MAX	H	J	K	L
XTB 22	29.93 [760]	31.18 [792]	7.98 [203]	22.0 [56]	.875 STD [22]	(3) .875-9 [22]	3.750 [95]	2.500 [63,5]	5.000 [127]	28.10 [714]	5.12 [130]	2.86 [73]	29.12 [740]
XTB 22 DUAL	29.93 [760]	31.18 [792]	10.64 [270]	22.0 [56]	.875 STD [22]	(3) .875-9 [22]	3.750 [95]	2.500 [63,5]	5.000 [127]	28.10 [714]	5.12 [130]	5.52 [140]	29.12 [740]

* Bored-to-size rotors available upon request. See Bore & Keyway Dimensions.

XTB 22 AND XTB 22 DUAL TORQUE (INCH POUNDS)

Number of Calipers	Coefficient of Friction 0.15 (LoCo) 80 PSI	0.15 (LoCo) 1 PSI	0.35 (Std) 80 PSI	0.35 (Std) 1 PSI
1	2160	27	5040	63
2	4400	55	10267	128
3	6560	82	15307	191
4	8800	110	20533	257
5	10960	137	25573	320
6	13200	165	30800	385
7	15360	192	35840	448

Note: Rated torque may vary depending on operating conditions.
Friction coefficients are nominal

THERMAL DISSIPATION VS RPM

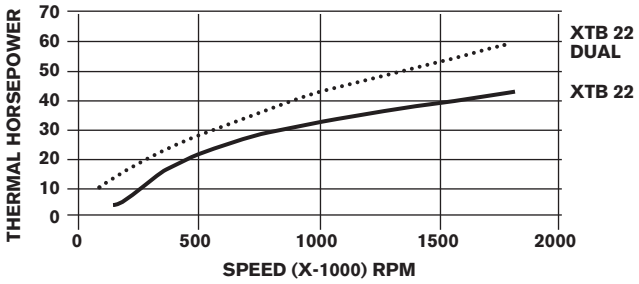

XTB 22 AND XTB 22 DUAL TORQUE (NEWTON METERS)

Number of Calipers	Coefficient of Friction 0.15 (LoCo) 550 kPa	0.15 (LoCo) 7 kPa	0.35 (Std) 550 kPa	0.35 (Std) 7 kPa
1	244	3	569	7,1
2	497	6,2	1160	14,4
3	741	9,2	1729	21,5
4	994	12,4	2320	29
5	1238	15,4	2889	36
6	1491	18,6	3480	44
7	1735	21,6	4049	50

METRIC THERMAL DISSIPATION VS RPM

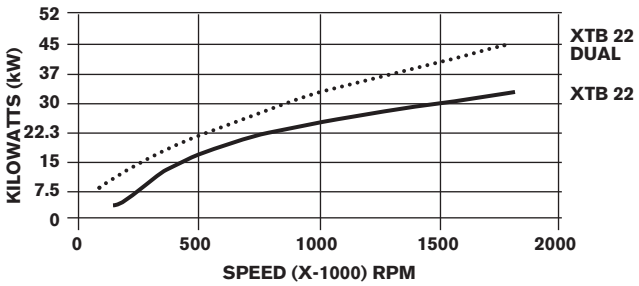

XTB 22 & XTB 22 DUAL *Tension Control Brakes*

BORE AND KEYWAY DIMENSIONS

Bore Range	Key (Square)	Keyway Tolerance
2.500 – 2.750 [63,50 – 69,85]	0.625 [15,87]	+.003 –.000 [+0,076 –0,00]
2.812 – 3.250 [71,42 – 82,55]	0.750 [19,05]	+.003 –.000 [+0,076 –0,00]
3.312 – 3.750 [84,12 – 95,25]	0.875 [22,22]	+.004 –.000 [+0,101 –0,00]
3.812 – 4.500 [96,82 – 114,3]	1.000 [25,40]	+.004 –.000 [+0,101 –0,00]
4.562 – 5.000 [115,8 – 127]	1.250 [31,75]	+.004 –.000 [+0,101 –0,00]

Note: Bushings not acceptable for XTB applications. Bore sizes not indicated are available (see Min./Max. ranges on dimensional drawing).

ORDERING INFORMATION

XTB Tension Controlled Brakes are custom assembled for each application. Consult with Nexen Technical Service to determine your exact needs.

Quantity	Description	Shipping Wt. Lbs. [Kg]
1	Rotor, Hub, & Mounting Plate Assembly	See below
1–7	Caliper Assemblies as required	See below
1–7	Friction Facing Kits as required	See below
1	Guard (Product No. 835449)	17 [7,7]

ROTOR, HUB & MOUNTING PLATE

Best thermal dissipation if brake is ordered for direction of rotation. Reduce by 10% for 0-500 RPM and reduce by 25% for 501-1800 RPM.

Model (CCW)	Hub Bore Diameter INCHES [MM]	Product Number	Model (CW)	Hub Bore Diameter INCHES [MM]	Product Number	Max. RPM	Rotor Inertia Lb.Ft² [Kgm²]	Shipping Wt. Lbs. [Kg]
XTB 22	2.50 [63,5]	835541	XTB 22	2.50 [63,5]	835540	1800	69.48 [2,92]	297 [134,7]
XTB 22 DUAL	2.50 [63,5]	835551	XTB 22 DUAL	2.50 [63,5]	835550	1800	133.71 [5,63]	350 [158,8]
XTB 22	3.75 [95,25]	835543	XTB 22	3.75 [95,25]	835542	1800	69.48 [2,92]	290 [131,5]
XTB 22 DUAL	3.75 [95,25]	835553	XTB 22 DUAL	3.75 [95,25]	835552	1800	133.71 [5,63]	340 [154,2]
XTB 22	5.00 [127]	835545	XTB 22	5.00 [127]	835544	1800	69.48 [2,92]	279 [126,6]
XTB 22 DUAL	5.00 [127]	835555	XTB 22 DUAL	5.00 [127]	835554	1800	133.71 [5,63]	329 [49,2]

CALIPER ASSEMBLIES

Each caliper assembly has two caliper halves. Order one caliper assembly for each caliper position. The number of caliper positions is determined by your torque requirements.

Model	Product Number	Description	Shipping Wt. Lbs. [Kg]
XTB 22	835560	1 Caliper Assembly	14 [6,35]
XTB 22 DUAL	835570	1 Caliper Assembly	15.5 [7,00]

FACING KITS–ALL MODELS

Facing kits contain two asbestos-free facings of either standard or low coefficient of friction.
One facing kit per caliper assembly is required.

Facing Kits	LoCo (0.15) Product No.	STD. (0.35) Product No.	Shipping Wt. Lbs. [Kg]
1	835581	835580	2.00 [0,91]

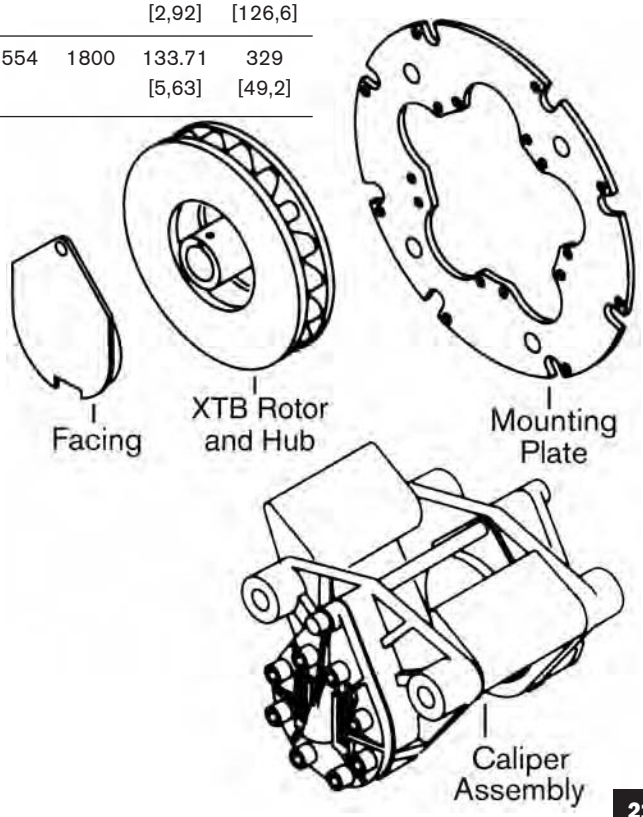

BTBA TENSION CONTROL BRAKES

BTBA Brakes Sizes 10 & 12

Nexen's BTBA delivers consistent tensioning in web control applications including corrugating, labeling, and printing. This innovative tension control brake offers a finned rotor with an integral fan for maximum heat dissipation. Low rotating inertia ensures proper tensioning regardless of roll size – even at core.

Designed with ease of assembly and maintenance in mind, these brakes feature long-life friction facings to limit replacement costs. The quick change feature on each facing shoe reduces downtime and maintenance expense. Intended for mounting on shaftless unwind stands and other shaft-end applications, the BTBA comes fully assembled and has a straight bore for fast and easy installation.

HIGH THERMAL CAPACITY IN A SMALL PACKAGE

The BTBA features design improvements that ensure maximum heat capacity. An integral fan works with the finned rotor to cool the brake, while Nexen's open-design guard allows heat to dissipate away from the brake quickly. Cross-drilled holes in the rotor further increase air flow for optimal heat dissipation.

EASY INSTALLATION - NO FLANGE REQUIRED

With simple electrical and pneumatic connections, the BTBA retrofits shaft-mounted brakes with a straight bore for quick and easy installation.

VERSATILE, PRECISE TENSION CONTROL

The BTB utilizes multiple actuators to achieve different
torque ranges across a wide range of applications.

DESIGN SIMPLICITY FOR EASY MAINTENANCE

The BTBA is the model of simplicity. Effortlessly replace facings by pulling the spring-loaded locking pin and lifting the facing out.

ADDITIONAL BTBA FEATURES

(BTBA 12 Shown)

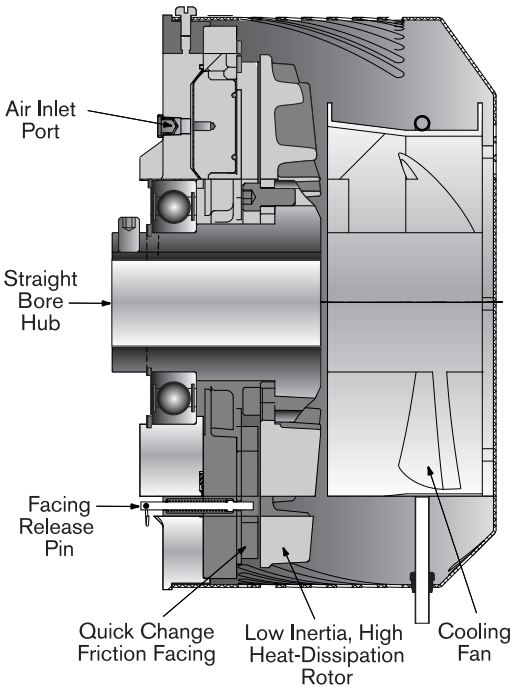

- High torque capacity: (Standard & LoCo Facings)
  BTBA-10 (Standard): 349.4 Nm [3092 in-lb]
  BTBA-10 (LoCo): 174.7 Nm [1546 in-lb]
  BTBA-12 (Standard): 587.6 Nm [5200 in-lb]
  BTBA-12 (LoCo): 356.0 Nm [3150 in-lb]
- Fan-cooled for maximum thermal capacity:
  BTBA-10: 5.6 kW [7.6 HPT]*
  BTBA-12: 7.5 kW [10.0 HPT]*
- Low inertia:
  BTBA-10: 0.04 kgm2 [0.94 lb-ft2]
  BTBA-12: 0.08 kgm2 [1.90 lb-ft2]
- Maximum speed:
  BTBA-10: 2000 rpm
  BTBA-12: 2500 rpm
- Pneumatically actuated, bidirectional rotation
- Compact outside diameter (OD)
- Shaft-mounted design
  - no precision flange required
- Diaphragm actuation - no seals to drag or o-rings to stick for improved low-end performance
- Torque control range of 50:1 using multiple actuators
- Simple connections: 120 VAC (optional 24 VDC) fan and 80 PSIG [5.5 bar] control air
- Thermal energy is dissipated into the atmosphere, not the machine frame, so your machine runs cooler.

THERMAL CAPACITY

Cross-drilled rotor with heat dissipating fins.

Utilizing a cross-drilled, finned rotor with an integral fan, the BTBA maximizes heat dissipation. Maximum ventilation holes in the guard allow heat to quickly dissipate away from the machine. This high thermal level helps ensure longer life and lower maintenance costs.

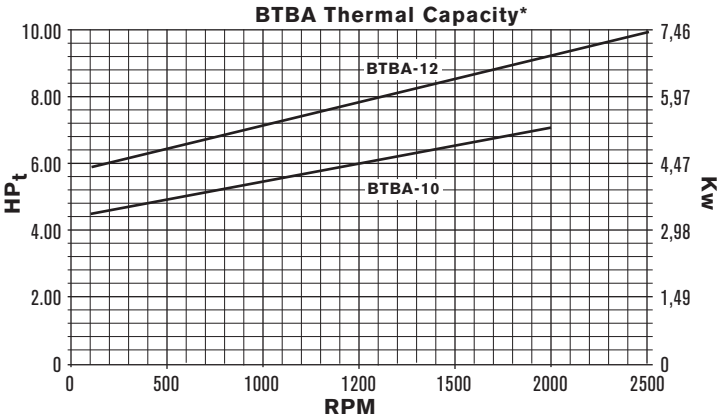

*Braking in the counterclockwise direction reduces thermals by 10 – 15%

BTBA 10 & 12 APPROXIMATE DIMENSIONS

DIMENSIONS BTBA 10 & 12

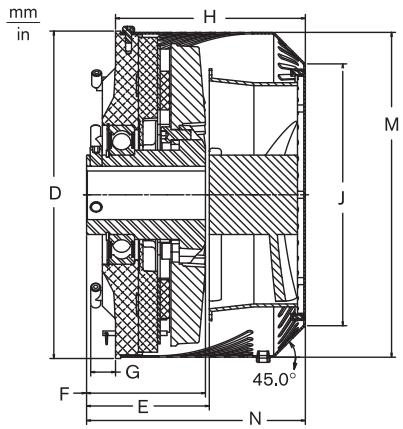

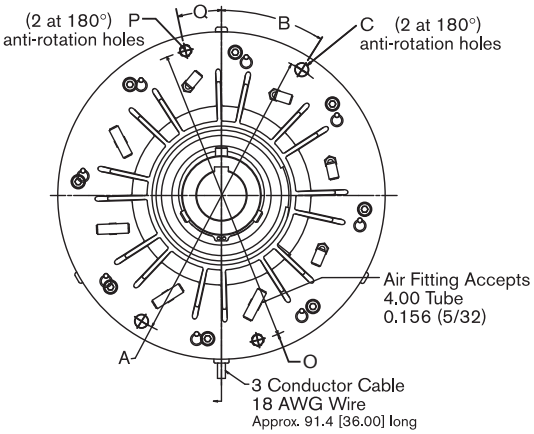

MODEL	A	B	C	D	E	F	G	H	J	M	N	O	P	Q
BTBA 10	ø240,00 [9.449]	10°	13,94 [0.531]	277,00 [10.91]	124,95 [4.919]	109,75 [4.321]	24,49 [0.964]	163,03 [6.418]	210,80 [8.30]	275,00 [10.83]	187,90 [7.40]	240,00 [9.449]	M12-1.75	110°
BTBA 12	ø300,00 [11.811]	42	m12-1,75	330,00 [12.99]	123,69 [4.870]	119,81 [4.717]	25,0 [0.98]	191,3 [7.53]	263,90 [10.39]	327,40 [12.89]	220,50 [8.68]	300,00 [11.811]	13,49 [0.531]	4.5°

SPECIFICATIONS

	BTBA 10	BTBA 12
INERTIA	0,04 kgm² [0.94 lb-ft²]	0,08 kgm² [1.90 lb-ft²]
SLIP TORQUE (STANDARD FACINGS)	339,0 Nm [3000 in-lb]	588,0 Nm [5200 in-lb]
THERMAL CAPACITY @ MAX RPM	5,6 [7.5 HP_t] @ 2000 rpm	7,5 kw [10.0 HP_t] @ 2500 rpm
FAN POWER	41W	61W
MAXIMUM AIR PRESSURE	5,5 bar [80 psi]	5,5 bar [80 psi]
SHIPPING WEIGHT	14,5 kg [32 lbs.]	22,0 kg [22 lbs.]

BTBA PART NUMBERS

Bore Sizes* mm [in]	Model	31,75 [1.250]	34,92 [1.375]	38,10 [1.500]	41,27 [1.625]	44,45 [1.750]	47,62 [1.875]	49 ,17 [1.938]	50,80 [2.000]
STANDARD FACINGS*	BTBA 10	927408	927420	927422	927424	927426	927428	927430	927407
	BTBA 12	927523	927525	927527	927529	927531	927533	927535	927537
LO CO FACINGS*	BTBA 10	927409	927421	927423	927425	927427	927429	927431	927432
	BTBA 12	927524	927526	927528	927530	927532	927534	927536	927538

*Nexen also offers metric bore sizes and Kevlar® friction facings for each model. Contact the Custom Business Unit at 800-843-7445 for more information on BTBA Brakes with metric bores or Kevlar® Friction Facings.

TORQUE RATINGS Standard, Kevlar® and Low Coefficient (LoCo) Friction Facings

BTBA-10 with Standard or Kevlar® Facings

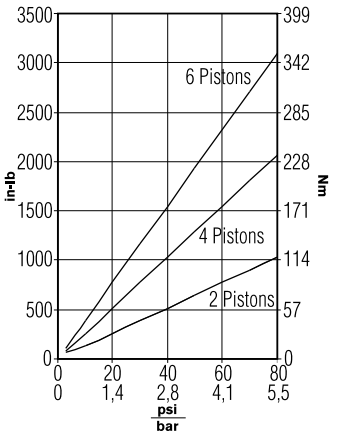

BTBA-10 with LoCo Facings

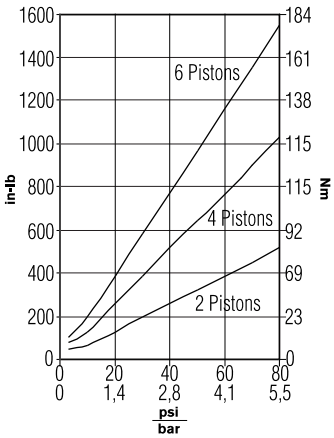

BTBA-12 with Standard or Kevlar® Facings

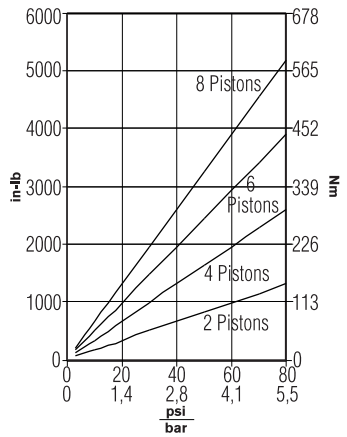

BTBA-12 with LoCo Facings

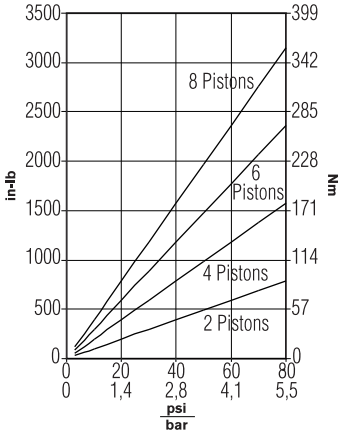

STB 600 AND 940 BRAKES

Superior tension control through a broad torque range.

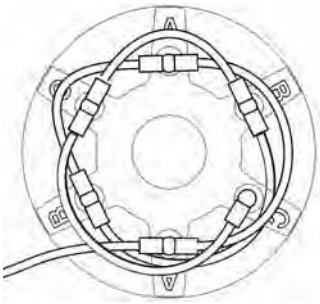

Diagram 1: Plumbing the 600/940 with no valves

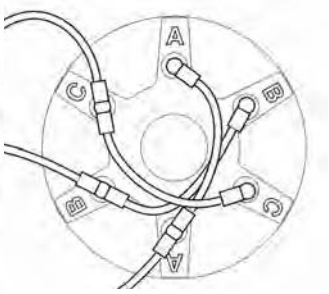

Diagram 2: Plumbing the 600/940 with three valves

The STB 600 and 940 Brakes allow superior torque control for your web with Nexen's line of patented tension control brakes. Three different sized piston sets can be actuated singly, or in any combination for a large number of torque-to-air pressure ranges.

This unique design gives you precise torque control without the problems associated with operating at low air pressures.

Ventilated rotor keeps the clutch and brake cool

The ventilated rotor creates an airflow path that draws cooler ambient air into the center of the rotor. The flow path directs air past the interface and dissipates heat radially away from the unit. This keeps the unit running cooler and longer for better performance.

Different piston sizes give you the widest range

Nexen's brakes actuate using a piston / diaphragm combination in three different sizes. There are no o-rings to stick, no seals to drag. There's nothing to hinder precise control of torque at lower operating pressures.

By engaging and disengaging various combinations of small, medium and large piston sets, you'll have a broad range of torque vs. Air pressure combinations. This gives you precise control over a wide range of torques and air pressures and lets you run a wider variety of materials on the same machine.

Features and benefits

- Fine torque control for precise tension control of web processes - 500:1 tension control range
- Field and dynamic programming of pressure/ torque characteristics for flexible operations
- Diaphragm operation — no seals to drag or o-rings to stick for great low pressure performance
- Different size piston sets
- Through-shaft mounting
- Compact size
- No rotary air unions required — eliminates "gun drilling" shafts

Variable torque ranges through the use of valves

Use air valves to engage combinations of pistons as shown in Diagram 2. Read the torque value for each piston set directly from the Torque vs. Air Pressure graph on the next page and add them.

Example: STB 600

Large piston set at 40 p.s.i. has a rated torque of 95 in-lb.
Medium piston set at 40 p.s.i. has a rated torque of 67 in-lb.
Small piston set at 40 p.s.i. has a rated torque of 41 in-lb.

Total torque at 40 p.s.i.:
Large + Medium =
95 + 67 = 162 in-lb.
Small only = 41 in-lb.

The total torque range of the brake will equal the sum of the torques of the individual sets from 0 to maximum air pressure.

STB 600 AND 940 BRAKES

Torque vs. Air Pressure

Thermal Horsepower vs. RPM

STB 600

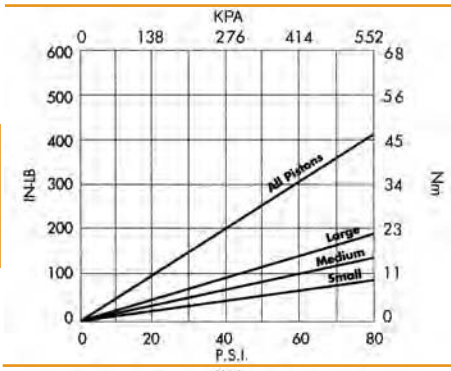

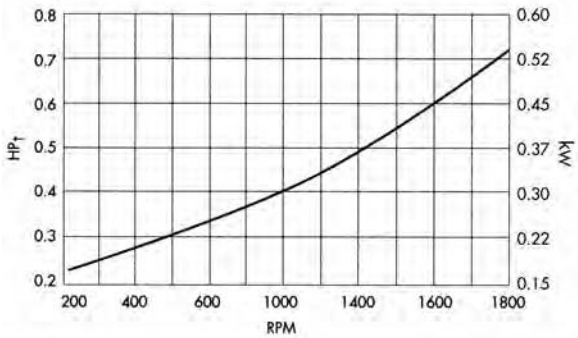

STB 940

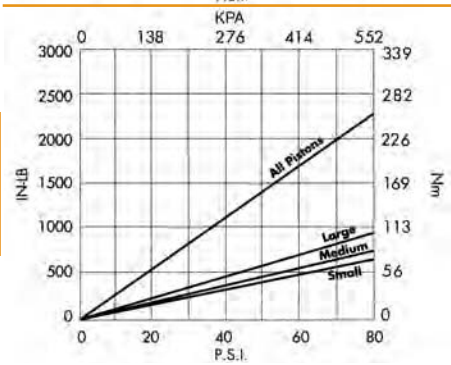

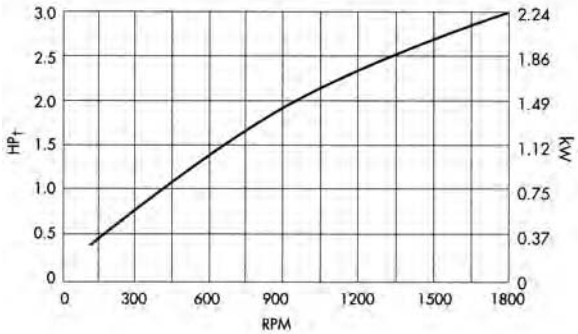

Specifications

MODEL	PRODUCT NUMBER	MAX. RPM	TEE FITTING	ELBOWS	TUBING	BORE DIAMETER	SHIPPING WEIGHT
STB 600	927203	3600	5	3	60 Inch [1524 MM]	1.125* Inch [29 MM]	9.7 Lbs. [4,4 Kg]
STB 940	927207	2400	5	3	60 Inch [1524 MM]	1.938* Inch [49 MM]	31.3 Lbs. [14,2 Kg]

*With standard square keyways.. Consult factory for other bore size requirements

Dimensions

(Shown with recommended guard) Nexen recommends using adequate guarding on all brakes and clutches.

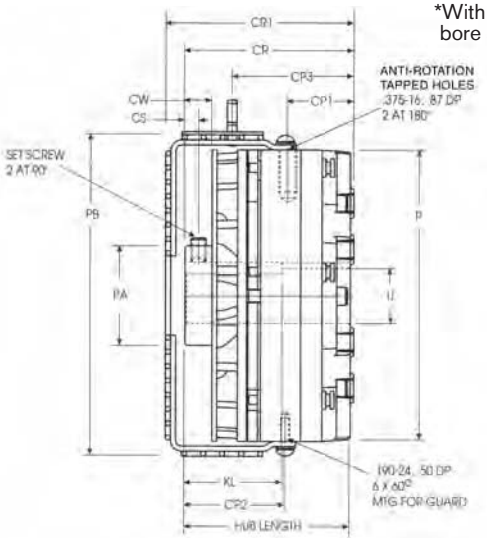

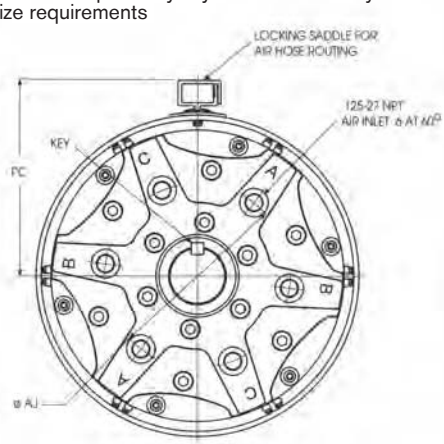

MODEL	PRODUCT NUMBER	AJ3.	CP1	CP2	CP3	CR	CR1	CS	CW	HUB LENGTH	KEY (SQ.)	KL	P	PA	PB	PC	SET SCREW	U +.001 -.001	OPTIONAL GUARD PRODUCT NUMBER
STB 600	927203	.8006 [20,34]	1.36 [35]	2.06 [53]	2.50 [64]	3.46 [88]	3.86 [98]	0.27 [6,9]	0.55 [14]	3.39 [86]	0.250 [6]	2.00 [51]	6.00 [152]	2.04 [52]	6.62 [168]	4.02 [102]	.312-18 [8]	1.125 [29]	927206
STB 940	927207	.140 [4]	1.78 [5]	2.52 [64]	3.01 [76]	4.51 [115]	4.93 [125]	0.37 [9]	0.74 [19]	4.44 [113]	0.500 [13]	3.00 [76]	9.40 [239]	3.33 [85]	10.02 [255]	5.72 [145]	.500-13 [13]	1.938 [49]	927210

MODEL	SHAFT INERTIA LB. Ft² [Kg. m²]	PILOT INERTIA LB. Ft² [Kg. m²]
STB 600	0.133 [0,006]	0.133 [0,006]

MODEL	SHAFT INERTIA LB. Ft² [Kg. m²]	PILOT INERTIA LB. Ft² [Kg. m²]
STB 940	0.725 [0,034]	0.955 [0,040]

ADVANCED SERIES STRAIGHT & TAPERED-BORE TENSION BRAKES S450A, S600A, S800A, S1000A, T450A, T600A, T800A, T1000A

- Provide dependable, long-lasting torque for your unwind applications. The high thermal output and torque ratings of the advanced series make these units ideal for demanding tension operations.
- Full range of sizes to meet all unique specification requirements.
- Advanced Series offers both straight bore hubs or tapered bores for QD® mounting.
- Both models are available with Standard, Low Coefficient (LoCo) or Ultra LoCo friction facings to meet your torque requirements.
- Facings are split for fast and easy facing replacement, less downtime.

- **High Dynamic Torque** (at 5.5 bar [80 psi] air pressure) 42.3 – 331.3 Nm [374 – 2932 in-lb] with Standard Facings, 25.3 – 198.9 Nm [224 – 1760 in-lb] with LoCo Facings
- **High Thermal Capacity** SA-Brakes: 1.42 – 4.44 Kw [1.90 – 5.96 HPT] at 1800 rpm. TA-Brakes: 1.28 – 4.12 Kw [1.73 – 5.53 HPT] at 1800 rpm
- **Straight bore hub** in inch and metric sizes for easy mounting (SA only) Bore Range: 25 – 75 mm [1.125 – 2.938 in]
- **Tapered-bore hub uses QD bushings** for a variety of shaft diameters (TA only)
- **Variable mounting configurations** Flange mounting or shaft mounting with a torque pin (SA only), Shaft mounting with a torque pin (TA only)
- **Split facing** for easy replacement and low maintenance costs
- **High temperature o-rings**
- **High temperature bearing**
- **Brake guard for operator safety**

ADVANCED SERIES SA STRAIGHT-BORE & TA TAPERED-BORE TENSION BRAKES

SA Model	Brake	Max Bore (In)	Product Number	Max. Bore (mm)	Product Number	TA Model	Brake	Product Number**	QD® Bushing Type*
S-450A	Std.	1.125	827818	25,0	827820	T-450A	Std.	819003	JA
S-450A	LoCo	1.125	827819	25,0	827821	T-450A	LoCo	819004	JA
S-600A	Std.	1.375	827904	35,0	827907	T-600A	Std.	820604	SH
S-600A	LoCo	1.375	827905	35,0	827908	T-600A	LoCo	820605	SH
S-800A	Std.	1.938	828006	50,0	827908	T-800A	Std.	824202	SK
S-800A	LoCo	1.938	828007	50,0	827923	T-800A	LoCo	824203	SK
S-1000A	Std.	2.938	828008	75,0	827921	T-1000A	Std.	824305	E
S-1000A	LoCo	2.938	828009	75,0	827922	T-1000A	LoCo	824306	E

*QD bushings are customer furnished. ®QD is a Registered Trademark of Emerson Electric Company.
**For Ultra LoCo Friction Facings, contact Nexen Technical Support.

TORQUE VS. AIR PRESSURE

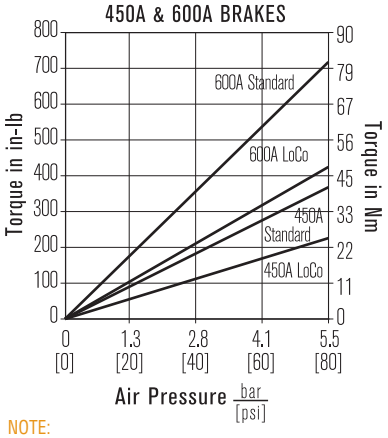

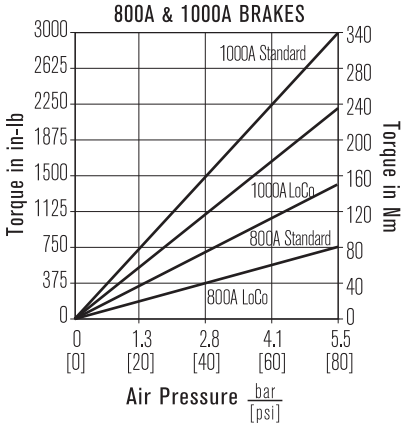

NOTE:
Dynamic torque is approximately 85% of static torque.Static torque is 60% of standard facing torque with LOCO friction facings.

THERMAL CAPACITY

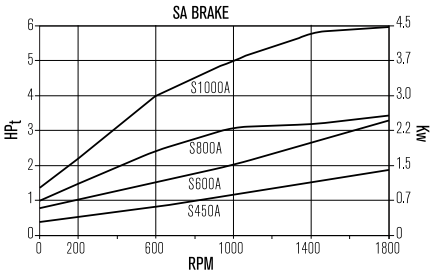

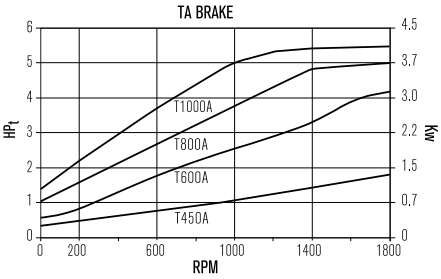

ACCESSORIES

Models	Component	Product Number	Shipping Wt. kg (Lbs)
S & T-450A	Torque Pin Bracket	819900	0,5 (1)
	Brake Safety Guard	817700	0,9 (2)
S & T-600A	Torque Pin Bracket	821400	0,9 (2)
	Brake Safety Guard	818300	0,9 (2)
S & T-800A	Torque Pin Bracket	823400	0,9 (2)
	Brake Safety Guard	826300	1,4 (3)
S & T-1000A	Torque Pin Bracket	825500	1,4 (3)
	Brake Safety Guard	828200	1,4 (3)

These accessories have the same dimensions as standard S-brakes.

SA & TA MODELS MAXIMUM RPM

SIZE	MAX RPM
450	4500
600	4000
800	3500
1000	3000

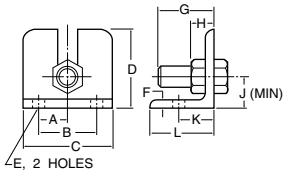

TORQUE PIN BRACKET

MODEL	PRODUCT NUMBER	A	B	C	D	E	F	G	H	J	K	L
S & T- 450A	819900	0.75	1.50	2.25	2.00	0.406	0.25	1.50	0.50	0.75	1.00	2.00
S & T- 600A	821400	1.00	2.00	3.00	2.50	0.406	0.25	1.625	.625	1.12	1.00	2.00
S & T- 800A	823400	1.12	2.25	3.50	3.00	0.469	0.31	2.00	0.75	1.19	1.38	2.50
S & T- 1000A	825500	--	--	--	--	--	--	--	--	--	--	--

S-450A, S-600A, S-800A, S-1000A ADVANCED SERIES STRAIGHT-BORE BRAKES - APPROX. DIMENSIONS

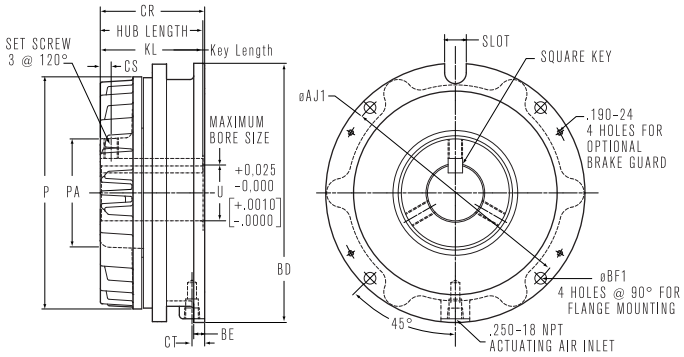

MODEL	AJ1*	BD	BE	BF1	CR	CS	CT	(SQ)	KEY KL	P	PA	SET SCREWS	U +.001 -.000	SLOT WD	SLOT DP	HUB LENGTH
S450A	134,87 [5.310]	150,9 [5.94]	6,3 [0.25]	7,14 [0.281]	63,8 [2.51]	4,6 [0.18]	11,2 [0.44]	6,35 [0.250]	22,35 [0.88]	115,8 [4.56]	47,8 [1.88]	.250–20	28,575 [1.1250]	9,6 [0.38]	16,5 [0.65]	63,5 [2.50]
S600A	165,10 [6.500]	182,6 [7.19]	9,7 [0.38]	9,12 [0.359]	81,2 [3.19]	6,4 [0.25]	10,4 [0.41]	7,963 [0.312]	78,7 [3.10]	153,9 [6.06]	65,57 [2.58]	.375–16	34,925 [1.3750]	15,93 [0.63]	16,8 [0.66]	79,4 [3.13]
S800A	212,9 [8.38]	228,6 [9.00]	9,7 [0.38]	10,31 [0.406]	92,1 [3.63]	9,7 [0.38]	11,2 [0.44]	12,73 [0.500]	90,5 [3.56]	204,7 [8.06]	95,2 [3.75]	.500	49,212 [1.9375]	19,10 [0.75]	17,5 [0.69]	90,7 [3.57]
S1000A	277,8 [10.94]	301,8 [11.88]	12,7 [0.50]	13,49 [0.531]	103,1 [4.06]	9,7 [0.38]	18,3 [0.72]	19,08 [0.750]	100,0 [3.94]	255,5 [10.06]	127,0 [5.00]	.500	74,612 [2.9375]	22,3 [0.88]	23,1 [0.91]	100,8 [3.97]

*Four additional holes @ 90° apart and 15° from the centerline are present on the S1000A models.

T-450A, T-600A, T-800A, T-1000A ADVANCED SERIES TAPERED-BORE BRAKES - APPROX. DIMENSIONS

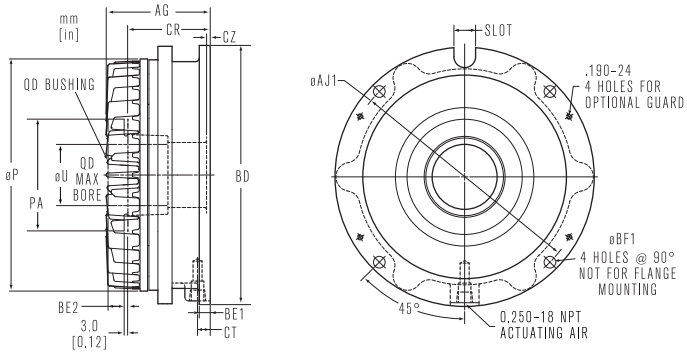

Model	AG	øAJ1	øAJ2*	BD	BE1	BE2	øBF1	CR	CT	CZ	P	PA	øU	SLOT WD	SLOT DP
T450A	63.4 [2.50]	134.87 [5.310]	--	150.9 [5.94]	7.1 [0.28]	7.9 [0.31]	7.14 [0.281]	52.6 [2.07]	11.2 [0.44]	7.1 [0.28]	115.8 [4.56]	50.8 [2.00]	25.4 [1.000]	9.6 [0.38]	16.5 [0.65]
T600A	81.5 [3.21]	165.10 [6.500]	--	182.63 [7.19]	9.65 [0.38]	11.2 [0.44]	9.12 [0.359]	61.5 [2.42]	10.41 [0.41]	1.8 [0.07]	153.92 [6.06]	66.5 [2.62]	34.93 [1.375]	15.93 [0.63]	16.8 [0.66]
T800A	91.7 [3.61]	212.85 [8.380]	--	228.6 [9.00]	9.7 [0.38]	14.2 [0.56]	10.31 [0.406]	72.8 [2.87]	11.2 [0.44]	3.5 [0.14]	204.7 [8.06]	98.6 [3.88]	53.98 [2.125]	19.1 [0.75]	17.5 [0.69]
T1000A	106.4 [4.19]	277.80 [10.937]	279.40 [11.000]	301.8 [11.88]	12.7 [0.50]	22.4 [0.88]	13.49 [0.531]	86.5 [3.40]	18.3 [0.72]	1.4 [0.06]	255.5 [10.06]	152.4 [6.00]	73.02 [2.875]	22.3 [0.88]	23.1 [0.91]

*Four additional holes @ 90° apart and 15° from the centerline are present on the T1000A models.

Brake Safety Guard

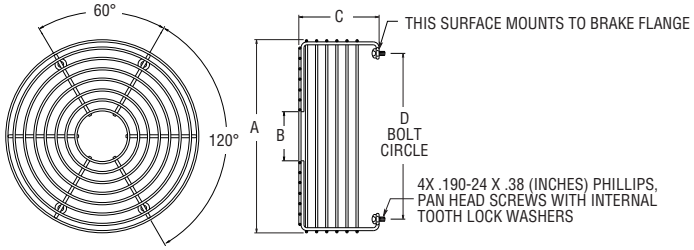

MODEL	PRODUCT NUMBER	A	B	C	D
S-450A & T-450A	817700	6.56	1.652	2.69	5.25
S-600A & T-600A	818300	7.87	2.00	3.28	6.75
S-800A & T-8000A	826300	9.69	2.75	3.66	8.37
S-1000A & T-1000A	828200	9.69	2.75	3.66	8.37

Recommended Tensions for Typical Converting Applications

PAPER PRODUCTS

Suggested Tension Levels
(Based upon 3000 ft² ream)

Basis Weight	WIND Pounds/Lineal Inch	UNWIND Pounds/Lineal Inch
15	0.5	0.25
20	0.75	0.5
30	1	0.75
40	1.5	1
50	2	1.25
60	2.5	1.75
80	3	2
100	4	3
120	5	3.5
150	6	4
180	8	6
200	10	7

PAPER BOARD

(Measures as Point = 0.001 inch)

Point	WIND Pounds/Lineal Inch	UNWIND Pounds/Lineal Inch
8	3	2
12	4	2.75
15	5	3.25
20	7	4.75
25	9	6
30	11	7.25

FILMS AND FOILS

Material	Pounds/Mil/Inch
Acetate	0.50
Alum. Foil	1
Cellophane	0.75
Cellulose	0.5
Cryovac	0.1
Glassine	1.5
Polyester	0.75
Nylon	0.25
Polyethylene	0.25
Polystyrene	1
Pliofilm	0.1
Saran	0.1
Vinyl	0.1
Polypropylene	0.25

WIRE

AWG	Total Tension (Lbs)
8	30
10	20
12	12
14	9
16	6
20	5
24	4.5
30	1.25
36	0.25
40	0.1

Copper	Use Chart Value
Aluminum	Use Chart Value x 0.6
Multi-strand	Use tension per strand x number of strands

Please Note: This list is a guideline only. Actual tensions may vary depending upon the type of operation, for example, slitting tensions may be slightly lower, while coating and laminating tensions may be slightly higher than the values listed above.

(METRIC)

PAPER/PAPERBOARD

Weight (g/m2)	WINDING Tension (N/cm)	UNWINDING Tension (N/cm)
25	1,3	0,8
30	1,8	1,0
50	2,6	1,6
65	3,5	2,3
100	5,3	3,5
130	7,0	4,6
160	7,8	5,0
200	8,8	5,8
260	12,3	8,1
325	16,0	10,5
400	19,0	12,5

FILMS/FOILS

Material	Tension (N/u/mm)
Aluminum Foil	0,70
Cellophane	0,70
Acetate	0,35
Polyester (mylar)	0,50
Polyethylene (PE)	0,20
Polypropylene	0,20
Polystyrene	0,70
Saran	0,07
Vinyl	0,07

WIRE

Diameter (mm)	Total Tension (Kgs)
2,590	9
2,050	5
1,630	4
1,290	2,72
0,813	2,26
0,511	2
0,254	0,57
0,127	0,12
0,079	0,05

Copper	Use Chart Value
Aluminum	Use Chart Value x 0.6
Multi-strand	Use tension per strand x number of strands

TECHNICAL EVALUATION FOR BRAKES

General Selection Calculations

1. Fill in data for Roll Diameter, Web Speed, Web Width and Tension (See chart on page 220 for suggested tension levels for various materials).
2. If tension is given as pounds per mil per inch, (as newtons per micron per mm,) then web thickness is also required data.
3. Calculate maximum and minimum web tension ($T_W$max and $t_W$min).

Imperial System (Metric System)

4. Calculate Torque Requirement maximum and minimum. (Calculate Web Power, Total Power and Thermal Power.)
5. Calculate Effective Cooling Speed

Brake Selection

(Refer to torque and horsepower charts on page 217.)

1. Brake must dissipate Maximum Horsepower (Power) at the Effective Cooling Speed. Use the cooling enhancement if needed.
2. Brake must be able to rotate at maximum RPM.
3. Brake must deliver both the maximum and minimum torque within its normal control range.

Brake Selection Data

Imperial System (Metric System)

Roll Diameter

Max._____ in. (_____ mm) (D)
Min. _____ in. (_____ mm) (d)

Web Width

Max. _____ in. (_____ mm) (W)
Min._____ in. (_____ mm) (w)

Web Thickness

Max. _____ Mils (M) (_____ Micron) (μ)
Min. _____ Mils (m) (_____ Micron) (μ)

Web Speed

Max._____ FPM (_____ mpm) (V)
Min._____ FPM (_____ mpm) (v)

Tension Data

Max._____ T ❑ total ❑ pli (N/mm) ❑ lb/mil/in (N/M/mm) (T)
Min. _____ t ❑ total ❑ pli (N/mm) ❑ lb/mil/in (N/M/mm) (t)

Brakes

Normal Stop Time ____Sec.
Emergency Stop Time ____Sec.

Web Tension (T_W) Calculation:

If tension (T) is given as:

Total Tension; $T_W = T =$ _____ lb (N)

$t_w = t =$ _____ lb (N)

PLI (N/mm); $T_W = W \times T =$ _____ lb (N)

$t_w = w \times t =$ _____ lb (N)

Lb/mil/in; $T_W = W \times M \times T =$ _____ lb

$t_w = w \times m \times t =$ _____ lb

N/μ/mm; $T_W = W \times \mu \times T =$ _____ (N)

$t_w = w \times \mu \times t =$ _____ (N)

Brake Torque Requirement (τ)

$\tau Max = T_W Max \times D \div 2$

_____ x _____ ÷ 2 = _____ inch lbs.

$\tau Max = T_W Max \times D \div (2000)$

_____ x _____ ÷ 2 = _____ (Nm)

$\tau Min. = t_w Min \times d \div 2$

_____ x _____ ÷ 2 = _____ inch lbs.

$\tau Min. = t_w Min \times d \div (2000)$

_____ x _____ ÷ 2 = _____ (Nm)

Maximum Brake Horsepower HP_t (Power kW)

$\frac{TW \times V}{33000}$

_____ x _____ = _____ HP_t

$\frac{TW \times V}{(60000)}$

_____ x _____ = _____ (kW)

Maximum RPM

$\frac{V \times 12}{d \times \pi}$

$\frac{____ \times 12}{\times 3.14}$ = _____ RPM

or metric $\frac{V \times (1000)}{d \times \pi}$

$\frac{____ \times (1000)}{\times 3.14}$ = _____ RPM

Minimum RPM

$\frac{v \times 12}{D \times \pi}$

$\frac{____ \times 12}{\times 3.14}$ = _____ RPM

or metric $\frac{v \times (1000)}{D \times \pi}$

$\frac{____ \times (1000)}{\times 3.14}$ = _____ RPM

Effedtive Cooling Speed

$\text{Min. RPM} + \left(\frac{\text{Max. RPM} - \text{Min. RPM}}{3}\right)$

_____ + (– / 3) = _____

Nexen Engineering Service

Fax or e-mail to your Nexen Applications Engineer (Numbers listed on back cover of catalog)

Name _____ *Title:* _____ *Date:* _____ *Phone:* (____)_____ *Ext:* _____

Company: _____ *Fax or e-mail:* _____

Address: _____ *City:*_____*State:* _____ *Zip Code* _____

Product Function/Selection Chart

Product Group	Thru-Shaft Mounted Clutch-Brake	NEMA "C" Flange Open Design Clutch-Brake	NEMA "C" Flange Enclosed Design Clutch-Brake	NEMA "C" Flange Enclosed Design Clutch	NEMA "C" Flange Enclosed Design BISSC Approved	NEMA "C" Flange Modular System Clutch Brakes
General Features						
Number of Model Options	9 Standard 0 Metric	0 Standard 6 Metric	8 Standard 14 Metric	1 Standard 0 Metric	4 Standard 0 Metric	4 Standard 0 Metric
Functions						
Controlled Acceleration	Yes	Yes	Yes	Yes	Yes	Yes
Controlled Deceleration	Yes	Yes	Yes		Yes	Yes
Inching/Jogging	Yes	Yes	Yes	Yes	Yes	Yes
Rapid Cycling	Yes	Yes	Yes	Yes	Yes	Yes
Stopping/Holding	Yes	Yes	Yes		Yes	Yes
Overload Protection	Yes	Yes	Yes	Yes	Yes	Yes
Disconnect	Yes	Yes	Yes	Yes	Yes	Yes

Typical Applications

Shown below are four typical mounting applications for these clutch-brakes. Any of the three design options (FMCBE, FMCBES or FMCE) can be mounted in any one of these configurations. You will find the specific product requirements listed on the catalog page for each design style.

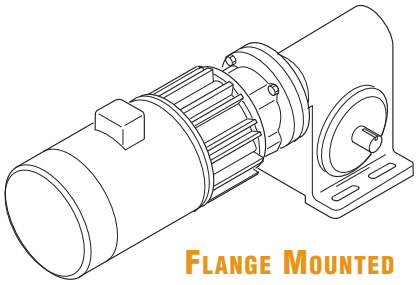

Flange Mounted

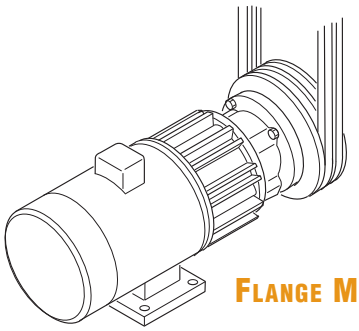

Flange Mounted

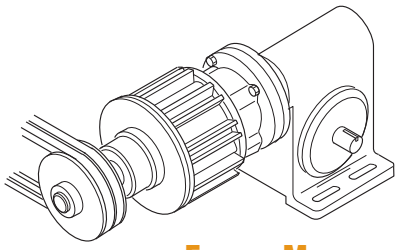

Flange Mounted with Input Unit

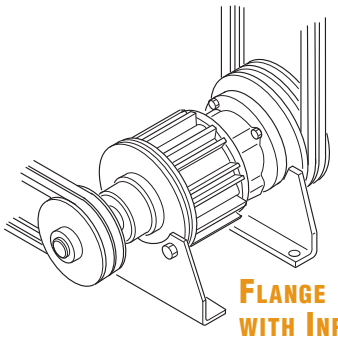

Flange Mounted with Input Unit

nexen

"Air Champ"®

In accordance with Nexen's established policy of constant product improvement, the specifications contained in this document are subject to change without notice. Technical data listed in this document are based on the latest information available at the time of printing and are also subject to change without notice. For current information, please consult: www.nexengroup.com

CLUTCH/BRAKES

This Section Contains: . . . . .Page

NEMA "C" FLANGE

Overview 224
FMCBE Model 500 224-225
FMCBE BISSC Certified Models 225
FMCBE Models 625 & 875, Enclosed, Integral Valve/Locking Key, Air Engaged 226--227
FMCBE Models 1125 & 1375, Enclosed, Integral Valve/Locking Key, Air Engaged 228-229
FMCBE Models 625 & 875, Enclosed, Air Engaged 230-231
FMCBE with Locking Key, Models 625 & 875, Enclosed, Air Engaged . . .232-233
FMCB & FMCBE Models 1125, 1375 & 1625 Enclosed, Air Engaged . .234-235
FMCBES Models 625 & 875, Enclosed, Spring Engaged 236-237
FMCBES Models 1125 & 1375, Enclosed, Spring Engaged 238-239
FMCE Model 625, 825, 1125 & 1375 Enclosed, Air Engaged 240-241

This Section Contains: . . . . .Page

MODULAR NEMA "C" FLANGE

Overview 242-243
Designing 625, 875, 1125 & 1375 Modular Systems 244-253

THRU-SHAFT MOUNTED

BCB-275 & FCB-450 Models, Clutch-Brakes-Sheave 254-255
LSCB-44HT & 54HT Straight Bore Conveyor Brakes 256-257
LCB-600 & MCB-800 Models Clutch-Brakes-Sheave 258-259
FWCB & LWCB Models, Clutch-Brakes-Sheave 260-261
MWCB & HWCB Models, Clutch-Brakes-Sheave 262-263
FCDB Models, Clutch-Disc Caliper . . .264-265
LCDB Models, Clutch-Disc Caliper . . .265-267
MCDB Models, Clutch-Disc Caliper . .268-269
HCDB Models, Clutch-Disc Caliper . . .270-271

This Section Contains: . . . . .Page

METRIC CLUTCH-BRAKES

Overview 272-273
FMCB Models, Open, Air Engaged
130-19 & 130-24 Models 274-275
7-28 & 7-38 Models 276-277
8-38 & 8-42 Models 278-279
FMCBE Models, Enclosed, Air Engaged
110-14, 130-19 & 130-24 280-281
7-28 & 7-38 Models 282-283
8-38 & 8-42 Models 284-285
FMCBES Models, Enclosed, Spring Engaged
110-14 & 130-19 & 130-24 286-287
7-28 & 7-38 Models 288-289
8-38 & 8-42 Models 290-291

FMCBE FLANGE MOUNTED CLUTCH-BRAKES

- Available in either aluminum, electroless nickel plating or black oxide coating
- Flange or Foot mount capability
- Optional Input Unit available
- Double acting piston design prevents overlap of clutch and brake functions

Choose from **3 design options**:

FMCBE basic enclosed clutch-brake:

- **Bore/Shaft** sizes from 0.500 to 1.375 inches
- BISSC (Baking Industry) certified models, in 0.625 and 0.875 bores, available for use in "cleanroom" applications

FMCBES enclosed, spring engaged clutch-brake:

- Spring engaged brake combined with air engaged clutch

FMCE enclosed clutch:

- For clutch only applications
- Available in black oxide and nickle coating
- **Bore sizes** of 0.625 and 0.875 inches
- For additional corrosion protection, contact the factory

FMCBE Flange mounted Clutch-Brakes, Totally Enclosed

All FMCBE clutch-brakes are totally enclosed for operation in environments where dirt, dust, moisture or other contaminants could cause power transmission components to fail. Enclosed design also prohibits worn friction material from escaping the clutch-brake and entering the process area.

FMCBEs mount directly to C-Face motors and reducers, and provide absolute control. These units fit NEMA frame sizes 48 to 215TC.

FMCBE CLUTCH-BRAKE, DESIGN STYLE COMPARISONS

The tables below show performance comparisons between the design styles. This is an overview, to aid in selection. Please refer to the product specific catalog pages prior to final determination, to ensure all features and benefits match your application.

Thermal Capacities

Thermal capacity is based upon 50% clutch and 50% brake usage. Operating speed is 1800 rpm for all data.

Model/Design Style	HP_T rating by Model Size					
	500	625	875	1125	1375	1625
FMCBE	0.10	0.14	0.18	0.33	0.44	–
FMCBES	–	0.14	0.18	0.33	0.44	–
FMCE	–	0.14	0.18	0.33	0.44	–
FMCB	–	0.14	0.18	0.33	0.44	1.19

Overhung Load Data

Data is based upon 50% clutch and 50% brake usage. Operating speed is 1800 rpm for all data.

Model/Design Style	Weight (Lbs) rating by Model Size					
	500	625	875	1125	1375	1625
FMCBE	70	92	195	240	350	–
FMCBES	–	92	195	240	350	–
FMCE	–	92	195	240	350	–
FMCB	–	92	195	240	350	600

FMCBE 500 MODEL CLUTCH-BRAKES - APPROXIMATE DIMENSIONS (INCHES)

Model 500 and 500 with Integral Valve, Torque up to 89 in. lbs. at 80 psi

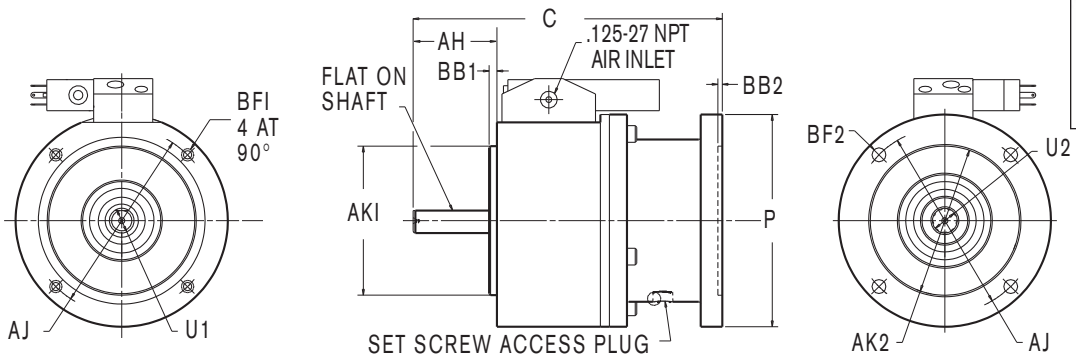

MODEL	PRODUCT NUMBER	AH	AJ	AK1 $^{+.000}_{-.002}$	AK2 $^{+.002}_{-.000}$	BB1	BB2	BF1	BF2	C	P	KEY (SQ)	KEYWAY WD	KEYWAY DP	U1 $^{+.000}_{-.001}$	U2 $^{+.001}_{-.000}$
500	801364	1.69	3.750	3.000	3.000	0.16	0.087	.54	.280	6.22	4.27	0.125	0.125	.063	.500	.500
500 with Keyed Bore & Shaft	801369	1.69	3.750	3.000	3.000	0.16	0.087	.54	.280	6.22	4.27	0.125	0.125	.063	.500	.500
500 with Integral Valve	801365	1.69	3.750	3.000	3.000	0.16	0.087	.54	.280	6.22	4.27	0.125	0.125	.063	.500	.500

FMCBE 500 MODEL CLUTCH-BRAKES - APPROXIMATE DIMENSIONS (INCHES)

Models 500 With Feet and Input Shaft. Torque up to 88 in. lbs. at 80 psi

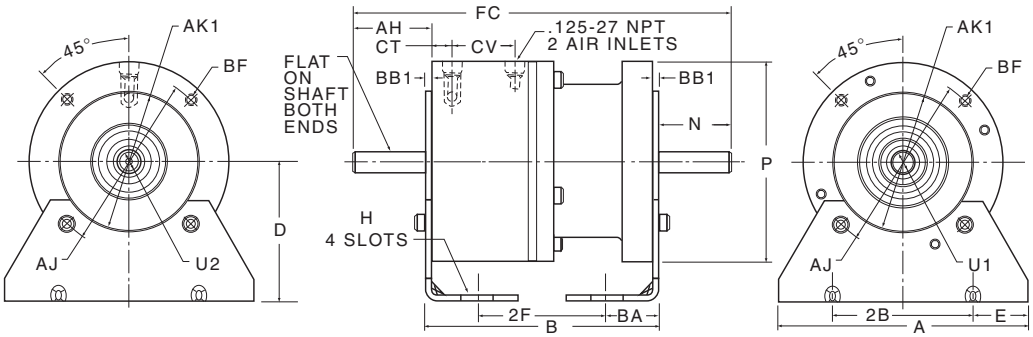

MODEL	PRODUCT NUMBER	A	AH	AJ	AK1 +.000 -.002	B	BA	BB1	2B	BF	CT	CV	D	E	FC	2F	H	N	U1 +.000 -.001	U2 +.001 -.000
500 with Feet & Input Shaft	801368	5.36	1.69	3.75	3.000	5.00	1.28	0.16	4.24	0.25	0.45	1.33	3.00	0.56	8.13	2.52	0.34 X 0.35	1.53	.500	.500

FMCBE BISSC MODEL CLUTCH-BRAKES - APPROXIMATE DIMENSIONS (INCHES)

Models 625 & 875

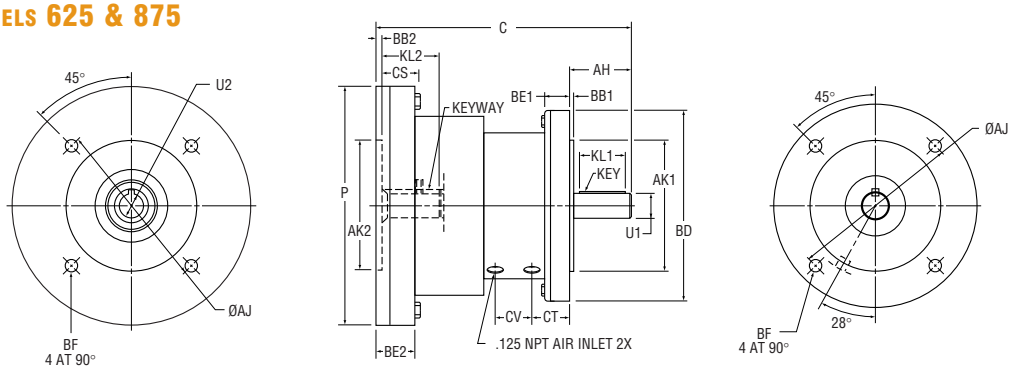

MODEL	PRODUCT NUMBER	AH	AJ	AK1 +.000 -.002	AK2 +.002 -.000	BB1	BB2	BD	BE1	BE2	BF	C	CS	CT	CV	KL1	KL2	P	KEY (SQ)	KWY WD	KWY DP	U1 +.000 -.001	U2 +.001 -.000
625	827250	2.06	5.875	4.499	4.501	0.12	0.16	6.50	0.83	1.12	.406	7.61	1.28	0.91	1.19	1.50	1.97	6.50	0.19	.188	.093	.625	.625
875	827260	2.12	5.875	4.499	4.501	0.12	0.19	6.60	0.85	1.34	.406	8.82	1.28	1.10	1.47	1.50	2.02	8.20	0.19	.188	.093	.875	.875

Models 625 & 875 with Input & Foot

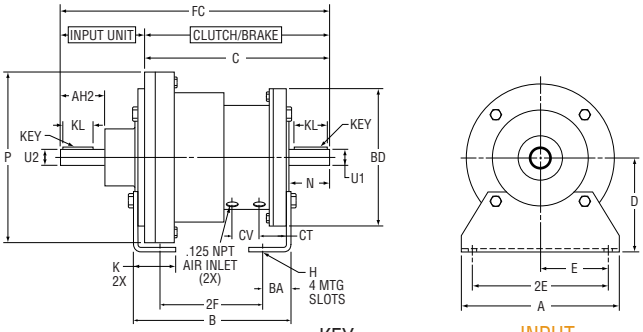

MODEL	PRODUCT NUMBER	N	FC	BD	C	CT	CV	KL	KEY (SQ)	P	U1 +.000 -.001	INPUT NUMBER	U2 +.000 -.001	AH2	FC
625	827250	1.93	11.62	6.50	7.61	0.91	1.19	1.50	.188	6.50	.625	827270	.625	2.12	11.09
875	827260	1.99	12.84	6.60	8.82	1.30	1.27	1.50	.188	8.20	.875	827280	.875	2.12	12.30

MODEL	FOOT NUMBER	A	B	BA	D	E	2E	2F	H	K
625	827251	7.50	6.21	1.25	4.51	3.19	6.38	3.71	.41 x .88	2.00
875	827261	7.50	7.37	1.25	4.51	3.19	6.38	4.87	.41 x .88	2.00

See next page for more information.

FMCBE WITH INTEGRAL VALVE /LOCKING KEY CLUTCH-BRAKES – MODELS FMCBE 625 & 875

The FMCBE with Integral Valve combines a Nexen Flange mounted, totally-enclosed clutch/brake with a single solenoid 4-way spool valve mounted directly to the clutch/brake air chamber. Air pressure is directed to the piston to perform either clutch or brake functions. The FMCBE/I.V. is equipped with Nexen's Locking Key feature. Choose from **2 Models**:

- **Bore sizes** of 0.625 and 0.875 in.
- Black oxide coating, Cooling fins
- Simplified; one product number for a clutch-brake combination, control valve and locking key feature
- Reduced number of air line connections for quicker install
- Shorter air lines for better air pressure
- Eliminates need for quick exhaust valves.
- 115 Volt is standard on FMCBE.
- The Integral Valve is available for 12, 24 and 115 volt systems
- Static Torque up to 325 In. Lbs. (brake) and 290 In. Lbs. (clutch)
- Overhung Load Cap. up to 292 Lbs.
- Design Speed up to 1800 rpm. Consult factory for higher speed
- Flange mounts directly to motors and reducers
- Compatible with C-face motors up to 2 HP
- Optional Foot Mount is available for belt drive applications
- Optional Input Unit allows you to incorporate pulleys or couplings into your application
- Single, double acting piston makes overlap impossible

FMCBE Flange Mounted Clutch-Brakes, Totally Enclosed, Integral Valve/ Locking Key

Standard Clutch-Brake is Flange Mounted. Order Foot Mount set separately for belt drive applications. Order Input Unit to incorporate pulleys into your application.

Model Number	Product Number	Valve Voltage	Bore (In)	HP_T Up To	Overhung Load Capacity (lbs) 1200 RPM	Overhung Load Capacity (lbs) 1800 RPM	Shipping Wt. (Lbs)
FMCBE -625	801705 801713	115V 24V	0.625	0.14	138	92	24
FMCBE -875	801706 801714	115V 24V	0.875	0.18	292	195	40

NOTE: Thermal Capacity (HP_T) and Overhung Load data is based upon 50% clutch and 50% brake usage.

Model Number	Clutch/Brake Product Number	Foot Mount Set of 2 Product Number	Foot Mount Shipping Wt. (Lbs)	Input Unit Product Number	Input Unit Overhung Load Capacity (lbs) 1200 RPM	Input Unit Overhung Load Capacity (lbs) 1800 RPM	Input Unit Shipping Wt. (Lbs)
FMCBE -625	801705	801431	4	929600	279	244	7
FMCBE -875	801706	801431	4	928400	279	244	7

Valve Electrical Specifications

Valves are "normally open" to engage the brake element of the clutch/brake when the solenoid is de-energized.

Voltage* (volts)	Power (watts)	Resistance (ohms)	Current (amps)	Product Number
24	.6	1100	.027	4961
115①	2.5	5500	.021	4919

① Standard Coil - Contact Nexen for other coil options

* The valve solenoid voltage is DC. All voltages can be used on AC or DC service. Use the lead wire supplied with the clutch/brake.

NEMA Motor/Frame Selection Chart

Use this chart as specification and operational criteria for your application.

HP of Motor	RPM	Frame Number	Motor Shaft (IN)	Clutch Brake Model Number
1/4	1800	56C	0.625	FMCBE I.V.-625
1/4	1200	56C	0.625	FMCBE I.V.-625
1/3	1800	56C	0.625	FMCBE I.V.-625
1/3	1200	56C	0.625	FMCBE I.V.-625
1/2	1800	56C	0.625	FMCBE I.V.-625
1/2	1200	56C	0.625	FMCBE I.V.-625
1/2	900	143TC	0.875	FMCBE I.V.-875
3/4	1800	56C	0.625	FMCBE I.V.-625
3/4	1200	143TC	0.875	FMCBE I.V.-875
3/4	900	145TC	0.875	FMCBE I.V.-875
1	1800	56TC	0.625	FMCBE I.V.-625
1	1800	143TC	0.875	FMCBE I.V.-875
1	1200	145TC	0.875	FMCBE I.V.-875
1-1/2	1800	145TC	0.875	FMCBE I.V.-875
2	1800	145TC	0.875	FMCBE I.V.-875

Torque Vs. Air Pressure

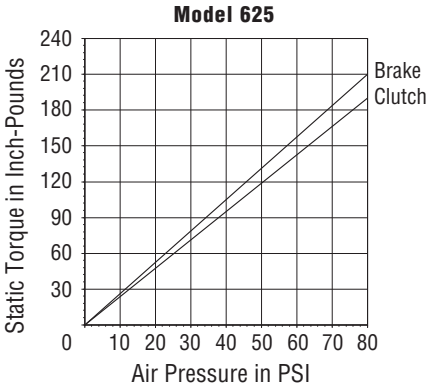

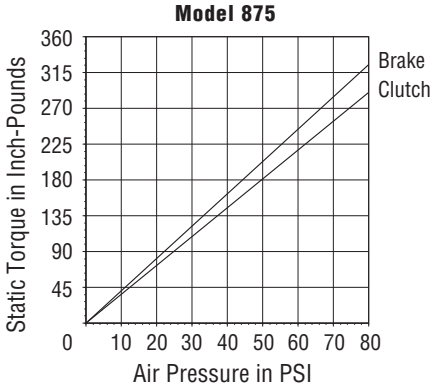

NOTE: Dynamic torque is approximately 85% of static torque.

FMCBE INTEGRAL VALVE/LOCKING KEY MODEL CLUTCH-BRAKES - APPROXIMATE DIMENSIONS (INCHES)

Models 625 & 875

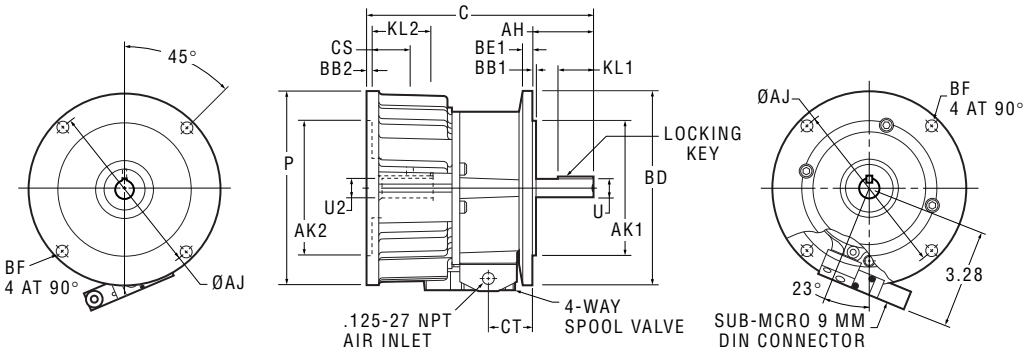

MODEL	PRODUCT NUMBER	AH	AJ	AK1 $^{+.000}_{-.002}$	AK2 $^{+.002}_{-.000}$	BB1	BB2	BD	BE1	BE2	BF	C	CS	CT	KL1	KL2	P	KEY (SQ)	KWY WD	KWY DP	U1 $^{+.000}_{-.001}$	U2 $^{+.001}_{-.000}$
625	801705 801713	2.06	5.875	4.499	4.501	0.12	0.16	6.50	0.31	0.38	.406	7.61	1.28	1.50	1.21	1.97	6.50	0.188	0.188	0.094	.625	.625
875	801706 801714	2.11	5.875	4.499	4.501	0.12	0.19	7.00	0.39	0.56	.406	8.81	1.25	1.83	1.31	2.02	7.81	0.188	0.188	0.094	.875	.875

Models 625 & 875 with Input

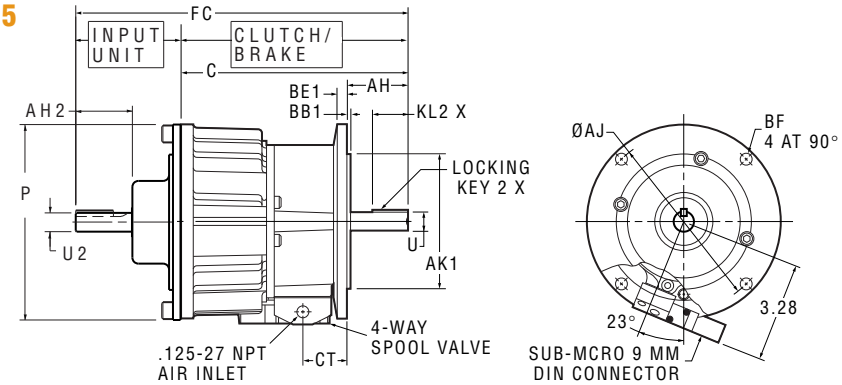

MODEL	PRODUCT NUMBER	AH	AJ	AK1 $^{+.000}_{-.002}$	BB1	BE1	C	CT	KL	KEY (SQ)	P	U1 $^{+.000}_{-.001}$	INPUT NUMBER	U2 $^{+.000}_{-.001}$	AH2	FC
625	801705	2.06	5.875	4.499	0.12	0.31	7.60	1.50	1.38	0.188	6.50	.625	929600	.875	1.89	11.09
875	801706	2.11	5.875	4.499	0.12	0.39	8.81	1.83	1.38	0.188	7.81	.875	928400	.875	1.89	12.30

Models 625 & 875 with Input & Foot

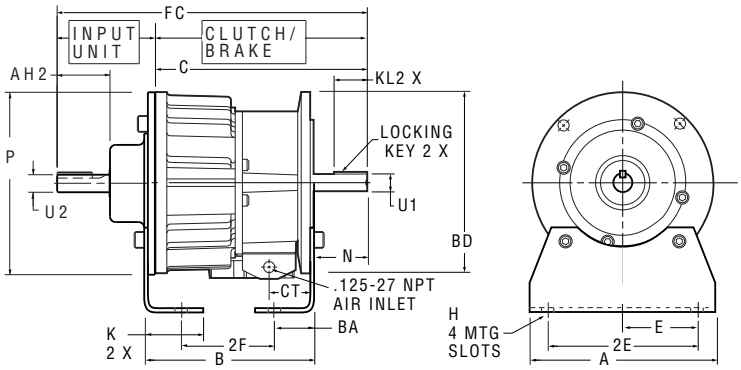

MODEL	PRODUCT NUMBER	BD	C	CT	CV	KL	KEY (SQ)	P	U1 $^{+.000}_{-.001}$	INPUT NUMBER	U2 $^{+.000}_{-.001}$	AH2	FC
625	801705	6.50	7.60	0.91	1.19	1.38	0.188	6.50	.625	929600	.875	1.89	11.09
875	801706	7.00	8.81	1.10	1.47	1.38	0.188	7.81	.875	928400	.875	1.89	12.30

MODEL	FOOT NUMBER	A	B	BA	D	E	2E	2F	H	K	N
625	801431	7.50	6.10	1.25	4.51	3.19	6.38	3.60	.41 x .88	2.00	1.87
875	801431	7.50	7.25	1.25	4.51	3.19	6.38	4.25	.41 x .88	2.00	1.96

FMCBE WITH INTEGRAL VALVE /LOCKING KEY CLUTCH-BRAKES – MODELS FMCBE 1125 & 1375

The FMCBE with Integral Valve combines a Nexen Flange mounted, totally-enclosed clutch/brake with a single solenoid 4-way spool valve mounted directly to the clutch/brake air chamber. Air pressure is directed to the piston to perform either clutch or brake functions. The FMCBE/I.V. is equipped with Nexen's Locking Key feature. Choose from **2 Models**:

- **Bore sizes** of 1.125 and 1.375 in.
- Black oxide coating, Cooling fins
- Simplified; one product number for a clutch-brake combination, control valve and locking key feature
- Reduced number of air line connections for quicker install
- Shorter air lines for better air pressure
- Eliminates need for quick exhaust valves.
- 115 Volt is standard on FMCBE.
- The Integral Valve is available for 12, 24 and 115 volt systems
- Static Torque up to 1200 In. Lbs. (brake) and 1050 In. Lbs. (clutch)
- Overhung Load Cap. up to 535 Lbs.
- Design Speed up to 1800 rpm. Consult factory for higher speed
- Flange mounts directly to motors and reducers
- Compatible with C-face motors up to 10 HP
- Optional Foot Mount is available for belt drive applications
- Optional Input Unit allows you to incorporate pulleys or couplings into your application
- Single, double acting piston makes overlap impossible

FMCBE Flange Mounted Clutch-Brakes with Integral Valve/Locking Key, Totally Enclosed

Standard Clutch-Brake is Flange Mounted. Order Foot Mount set separately for belt drive applications. Order Input Unit to incorporate pulleys into your application.

Model Number	Product Number	Valve Voltage	Bore (In)	HP_T Up To	Overhung Load Capacity (lbs) 1200 RPM	Overhung Load Capacity (lbs) 1800 RPM	Shipping Wt. Wt (Lbs)
FMCBE -1125	801709 801715	115V 24V	1.125	0.33	360	240	68
FMCBE -1375	801711 801716	115V 24V	1.375	0.44	525	350	89

NOTE: Thermal Capacity (HP_T) and Overhung Load data is based upon 50% clutch and 50% brake usage.

Model Number	Clutch/Brake Product Number	Foot Mount Set of 2 Product Number	Foot Mount Shipping Wt. (Lbs)	Input Unit Product Number	Input Unit Overhung Load Capacity (lbs) 1200 RPM	Input Unit Overhung Load Capacity (lbs) 1800 RPM	Input Unit Shipping Wt. (Lbs)
FMCBE -1125	801709	801603	6	935000	655	570	12
FMCBE -1375	801711	801603	6	936000	655	570	13

Valve Electrical Specifications

Valves are "normally open" to engage the brake element of the clutch/brake when the solenoid is de-energized.

* The valve solenoid voltage is DC. All voltages can be used on AC or DC service. Use the lead wire supplied with the clutch/brake.

Voltage* (volts)	Power (watts)	Resistance (ohms)	Current (amps)
12	.6	260	.050
24	.6	1100	.027
115①	2.5	5500	.021

① Standard Coil - Contact Nexen for other coil options

NEMA Motor/Frame Selection Chart

Use this chart as specification and operational criteria for your application.

HP of Motor	RPM	Frame Number	Motor Shaft (In)	Clutch Brake Model Number
1	900	182TC	1.125	FMCBE I.V.-1125
1-1/2	1200	182TC	1.125	FMCBE I.V.-1125
1-1/2	900	184TC	1.125	FMCBE I.V.-1125
2	1200	184TC	1.125	FMCBE I.V.-1125
2	900	213TC	1.375	FMCBE I.V.-1375
3	1800	182TC	1.125	FMCBE I.V.-1125
3	1200	213TC	1.375	FMCBE I.V.-1375
3	900	215TC	1.375	FMCBE I.V.-1375
5	1800	184TC	1.125	FMCBE I.V.-1125
5	1200	215TC	1.375	FMCBE I.V.-1375
7-1/2	1800	213TC	1.375	FMCBE I.V.-1375
10	1800	215TC	1.375	FMCBE I.V.-1375

Torque Vs. Air Pressure

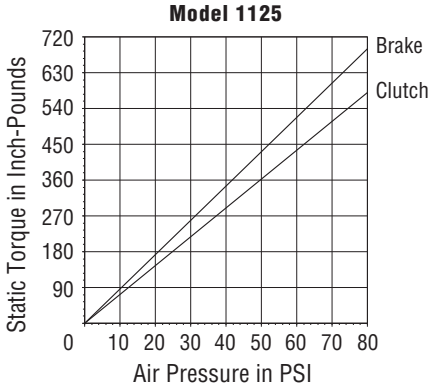

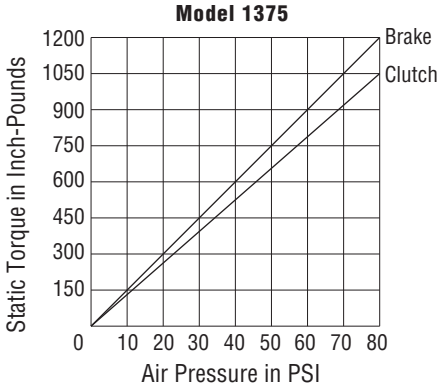

NOTE: Dynamic torque is approximately 85% of static torque.

FMCBE INTEGRAL VALVE/LOCKING KEY MODEL CLUTCH-BRAKES - APPROXIMATE DIMENSIONS (INCHES)

Models 1125 & 1375

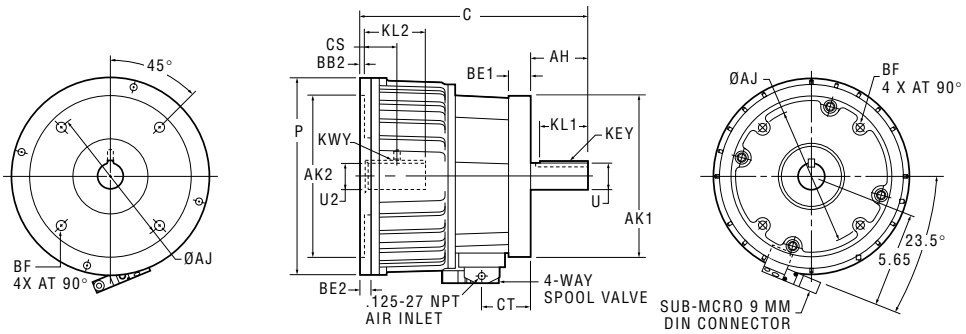

MODEL	PRODUCT NUMBER	AH	AJ	AK1 $^{+.000}_{-.002}$	AK2 $^{+.002}_{-.000}$	BB2	BE1	BE2	BF	C	CS	CT	KL1	KL2	P	KEY (SQ)	KWY WD	KWY DP	U1 $^{+.000}_{-.001}$	U2 $^{+.001}_{-.000}$
1125	801709 801715	2.58	7.250	8.499	8.501	0.19	0.54	0.37	.531	10.59	1.75	2.15	1.97	2.90	9.62	0.250	0.250	0.125	1.125	1.125
1375	801711 801716	3.08	7.250	8.499	8.501	0.19	1.12	0.37	.500-13	12.12	1.96	2.58	2.56	3.37	10.38	0.312	0.312	0.156	1.375	1.375

Models 1125 & 1375 with Input

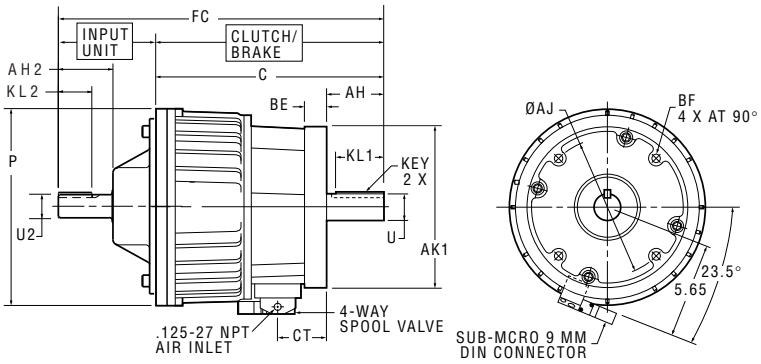

MODEL	PRODUCT NUMBER	AH	AJ	AK1 $^{+.000}_{-.002}$	BE	C	CT	KL1	KEY (SQ)	P	U1 $^{+.000}_{-.001}$	INPUT NUMBER	U2 $^{+.000}_{-.001}$	AH2	FC	KL2
1125	801709	2.58	7.250	8.499	0.54	10.59	2.15	1.97	0.250	9.62	1.125	935000	1.125	2.62	15.22	1.62
1375	801711	3.08	7.250	8.499	1.12	12.12	2.58	2.58	0.312	10.38	1.375	936000	1.375	3.14	17.26	2.25

Models 1125 & 1375 with Input & Foot

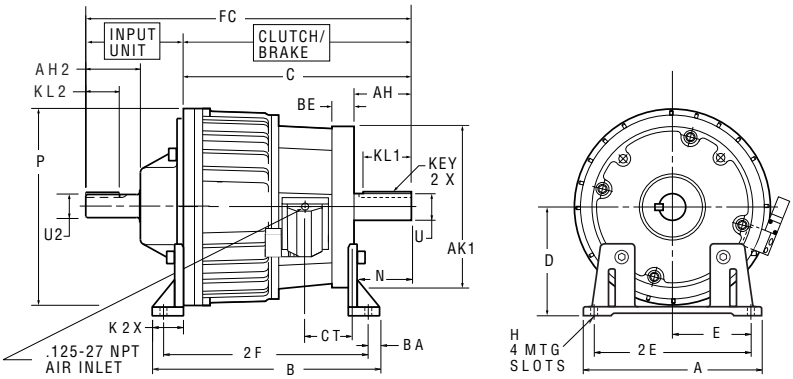

MODEL	PRODUCT NUMBER	AK $^{+.000}_{-.002}$	C	CT	CV	KL1	KEY (SQ)	P	U $^{+.000}_{-.001}$	INPUT NUMBER	AH2	FC	KL2
1125	801709	8.499	10.59	1.24	1.65	2.00	0.250	9.62	1.125	935000	2.62	15.22	1.62
1375	801711	8.499	12.12	1.60	1.91	2.56	0.312	10.38	1.375	936000	3.14	17.26	2.25

MODEL	FOOT NUMBER	A	B	BA	D	E	2E	2F	H	K	N
1125	801603	9.50	11.48	.62	5.25	4.00	8.00	10.23	.56 x 1.00	1.75	2.21
1375	801603	9.50	12.51	.62	5.25	4.00	8.00	11.26	.56 x 1.00	1.75	2.71

FMCBE CLUTCH-BRAKES – MODELS FMCBE 625 & 875

FMCBE Flange Mounted Clutch-Brakes are designed for controlled starts and stops in hostile, dirty environments. Totally enclosed design prevents contaminants from interfering with operation of the units while keeping worn friction material from escaping into the environment. Choose from **2 Models**:

- **Bore sizes** of 0.625 and 0.875 in.
- Static Torque up to 325 In. Lbs. (brake) and 290 In. Lbs. (clutch)
- Overhung Load Cap. up to 292 Lbs.
- Design Speed up to 1800 rpm. Consult factory for higher speed
- Flange mounts directly to motors and reducers
- Compatible with C-face motors up to 2 HP
- Optional Foot Mount is available for belt drive applications
- Optional Input Unit allows you to incorporate pulleys or couplings into your application
- Single, double acting piston makes overlap impossible

FMCBE Flange Mounted Clutch-Brakes, Totally Enclosed

Standard Clutch-Brake is Flange Mounted. Order Foot Mount set separately for belt drive applications. Order Input Unit to incorporate pulleys into your application.

Model Number	Product Number	Bore (In)	HP_T Up To	Overhung Load Capacity (Lbs) 1200 RPM	1800 RPM	Shipping Wt. (Lbs)
Black Coating:						
FMCBE-625	801440	0.625	0.14	138	92	24
FMCBE-875	801480	0.875	0.18	292	195	40

NOTE: Thermal Capacity (HP_T) and Overhung Load data is based upon 50% clutch and 50% brake usage.

Model Number	Product Number	Foot Mount Set (2 Mounts) Product Number	Shipping Wt. (Lbs)	Input Unit Product Number	Shipping Wt. (Lbs)
Black Coating:					
FMCBE-625	801440	801431	4	929600	7
FMCBE-875	801480	801431	4	928400	7

NEMA Motor/Frame Selection Chart

Use this chart as specification and operational criteria for your application.

HP of Motor	RPM	Frame Number	Motor Shaft (IN)	Clutch Brake Model Number
1/4	1800	56C	0.625	FMCBE-625 Black & BISSC
1/4	1200	56C	0.625	FMCBE-625 Black & BISSC
1/3	1800	56C	0.625	FMCBE-625 Black & BISSC
1/3	1200	56C	0.625	FMCBE-625 Black & BISSC
1/2	1800	56C	0.625	FMCBE-625 Black & BISSC
1/2	1200	56C	0.625	FMCBE-625 Black & BISSC
1/2	900	143TC	0.875	FMCBE-875 Black & BISSC
3/4	1800	56C	0.625	FMCBE-625 Black & BISSC
3/4	1200	143TC	0.875	FMCBE-875 Black & BISSC
3/4	900	145TC	0.875	FMCBE-875 Black & BISSC
1	1800	56TC	0.625	FMCBE-625 Black & BISSC
1	1800	143TC	0.875	FMCBE-875 Black & BISSC
1	1200	145TC	0.875	FMCBE-875 Black & BISSC
1-1/2	1800	145TC	0.875	FMCBE-875 Black & BISSC
2	1800	145TC	0.875	FMCBE-875 Black & BISSC

Torque Vs. Air Pressure

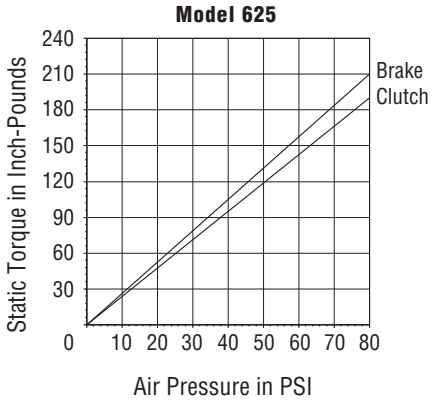

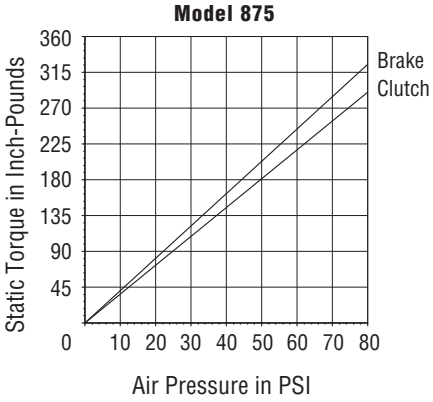

NOTE: Dynamic torque is approximately 85% of static torque.

FMCBE MODEL CLUTCH-BRAKES - APPROXIMATE DIMENSIONS (INCHES)

Models 625 & 875

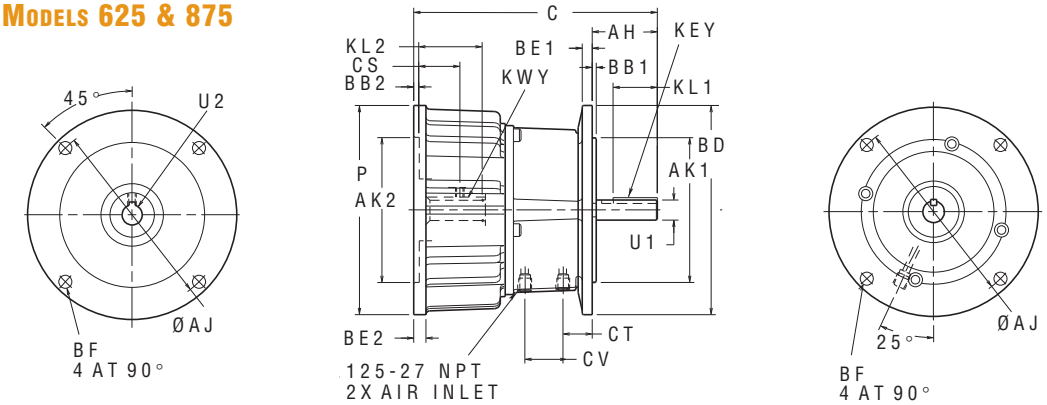

MODEL	PRODUCT NUMBER	AH	AJ	AK1 $^{+.000}_{-.002}$	AK2 $^{+.002}_{-.000}$	BB1	BB2	BD	BE1	BE2	BF	C	CS	CT	CV	KL1	KL2	P	KEY (SQ)	KWY WD	KWY DP	U1 $^{+.000}_{-.001}$	U2 $^{+.001}_{-.000}$
625	801440	2.06	5.875	4.499	4.501	0.12	0.16	6.50	0.31	0.38	.406	7.60	1.28	0.91	1.19	1.38	2.05	6.50	0.188	0.188	0.094	.625	.625
875	801480	2.11	5.875	4.499	4.501	0.12	0.19	7.00	0.39	0.56	.406	8.81	1.28	1.10	1.47	1.38	2.04	7.81	0.188	0.188	0.094	.875	.875

Models 625 & 875 with Input

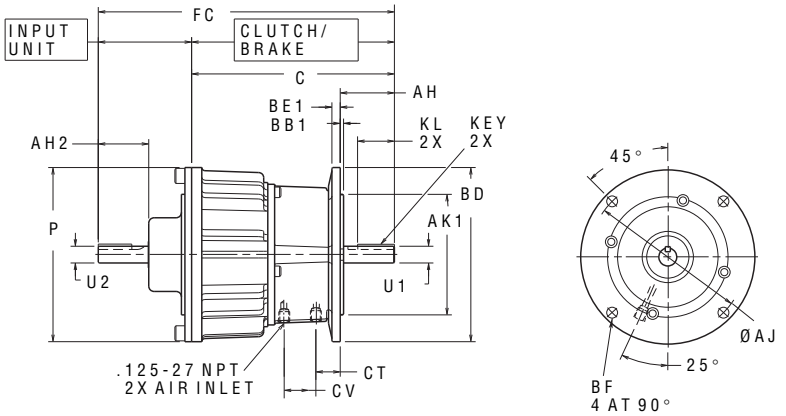

MODEL	PRODUCT NUMBER	AH	AJ	AK1 $^{+.000}_{-.002}$	BB1	BE1	C	CT	CV	KL	KEY (SQ)	P	U1 $^{+.000}_{-.001}$	INPUT NUMBER	U2 $^{+.000}_{-.001}$	AH2	FC
625	801440	2.06	5.875	4.499	0.12	0.31	7.60	0.91	1.19	1.38	0.188	6.50	.625	929600	.875	1.89	11.09
875	801480	2.11	5.875	4.499	0.12	0.39	8.81	1.10	1.47	1.38	0.188	7.81	.875	928400	.875	1.89	12.30

Models 625 & 875 with Input & Foot

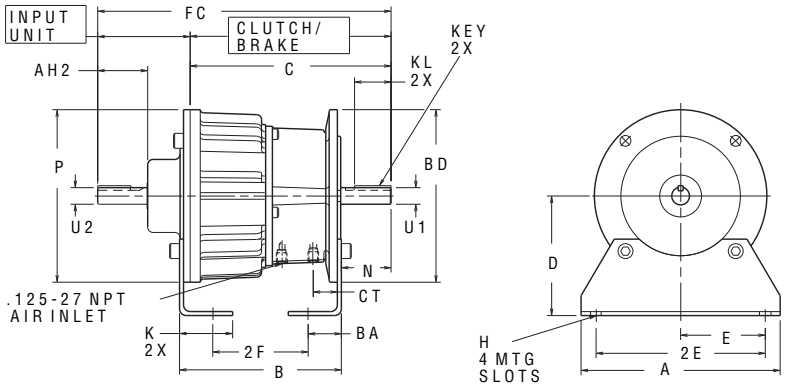

MODEL	PRODUCT NUMBER	BD	C	CT	CV	KL	KEY (SQ)	P	U1 $^{+.000}_{-.001}$	INPUT NUMBER	U2 $^{+.000}_{-.001}$	AH2	FC
625	801440	6.50	7.60	0.91	1.19	1.38	0.188	6.50	.625	929600	.875	1.89	11.09
875	801480	7.00	8.81	1.10	1.47	1.38	0.188	7.81	.875	928400	.875	1.89	12.30

MODEL	FOOT NUMBER	A	B	BA	D	E	2E	2F	H	K	N
625	801431	7.50	6.10	1.25	4.51	3.19	6.38	3.60	.41 x .88	2.00	1.87
875	801431	7.50	7.25	1.25	4.51	3.19	6.38	4.25	.41 x .88	2.00	1.96

FMCBE CLUTCH-BRAKES WITH LOCKING KEY FEATURE – MODELS FMCBE 625 & 875

FMCBE Flange Mounted Clutch-Brakes are designed for controlled starts and stops in hostile, dirty environments. Totally enclosed design prevents contaminants from interfering with operation of the units while keeping worn friction material from escaping into the environment. Fitted with a locking key system designed to eliminate keyway damage while providing positive connection for maximum torque in blind bore applications. The Locking Key system is an integral part of the Clutch/Brake output shaft. There is no extra installation required. Choose from **4 Models**:

- **Bore sizes** of 0.625 and 0.875 in.
- Both units available in either electroless nickel plating or black oxide coating
- Meets NEMA standard 1.26.5 for waterproof machines
- BISSC (Baking Industry) certified
- Static Torque up to 325 In. Lbs. (brake) and 290 In. Lbs. (clutch)
- Flange mounts directly to motors and reducers
- Compatible with C-face motors up to 2 HP
- Design Speed up to 1800 rpm. Consult factory for higher speed
- Optional Input Unit allows you to incorporate pulleys or couplings into your application

Special BISSC certified unit features:

- Smooth surface design prohibits bacteria buildup
- Single, double acting piston makes overlap impossible
- For additional corrosion protection, contact the factory

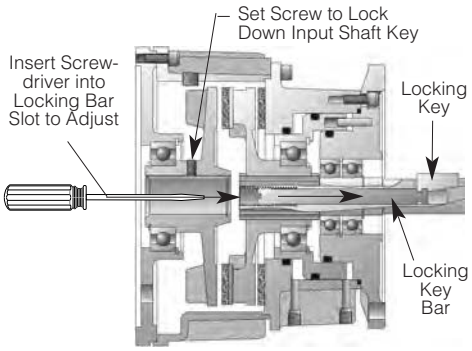

The Locking Key Bar is easily adjusted with a screwdriver. The bar screws into the output shaft, forcing the key tightly and securely into the mating keyway.Tipping of the key is prevented.

LOCKING KEY FEATURE FMCBE

Flange Mounted Clutch-Brakes, Totally Enclosed

Standard Clutch-Brake is Flange Mounted. Order Foot Mount set separately for belt drive applications. Order Input Unit to incorporate pulleys into your application.

Model Number	Product Number	Bore (In)	HP_T Up To	Overhung Load Capacity (Lbs) 1200 RPM	1800 RPM	Shipping Wt. (Lbs)
Black Coating:						
FMCBE-625	801677	0.625	0.14	138	92	24
FMCBE-875	801680	0.875	0.18	292	195	40
Nickel Coating:						
FMCBE-625, BISSC*	827272	0.625	0.14	138	92	24
FMCBE-875, BISSC*	827282	0.875	0.18	292	195	40

NOTE: Thermal Capacity (HP_T) and Overhung Load data is based upon 50% clutch and 50% brake usage.

Model Number	Product Number	Foot Mount Set (2 Mounts) Product Number	Shipping Wt. (Lbs)	Input Unit Product Number	Shipping Wt. (Lbs)
Black Coating:					
FMCBE-625	801677	801431	4	929600	7
FMCBE-875	801680	801431	4	928400	7
Nickel Coating:					
FMCBE-625, BISSC*	827272	827251	4	827270	7
FMCBE-875, BISSC*	827282	827261	4	827280	7

*See approximate dimensions, page 233

NEMA Motor/Frame Selection Chart

Use this chart as specification and operational criteria for your application.

HP of Motor	RPM	Frame Number	Motor Shaft (IN)	Clutch Brake Model Number
1/4	1800	56C	0.625	FMCBE-625 Black & BISSC
1/4	1200	56C	0.625	FMCBE-625 Black & BISSC
1/3	1800	56C	0.625	FMCBE-625 Black & BISSC
1/3	1200	56C	0.625	FMCBE-625 Black & BISSC
1/2	1800	56C	0.625	FMCBE-625 Black & BISSC
1/2	1200	56C	0.625	FMCBE-625 Black & BISSC
1/2	900	143TC	0.875	FMCBE-875 Black & BISSC
3/4	1800	56C	0.625	FMCBE-625 Black & BISSC
3/4	1200	143TC	0.875	FMCBE-875 Black & BISSC
3/4	900	145TC	0.875	FMCBE-875 Black & BISSC
1	1800	56TC	0.625	FMCBE-625 Black & BISSC
1	1800	143TC	0.875	FMCBE-875 Black & BISSC
1	1200	145TC	0.875	FMCBE-875 Black & BISSC
1-1/2	1800	145TC	0.875	FMCBE-875 Black & BISSC
2	1800	145TC	0.875	FMCBE-875 Black & BISSC

Torque Vs. Air Pressure

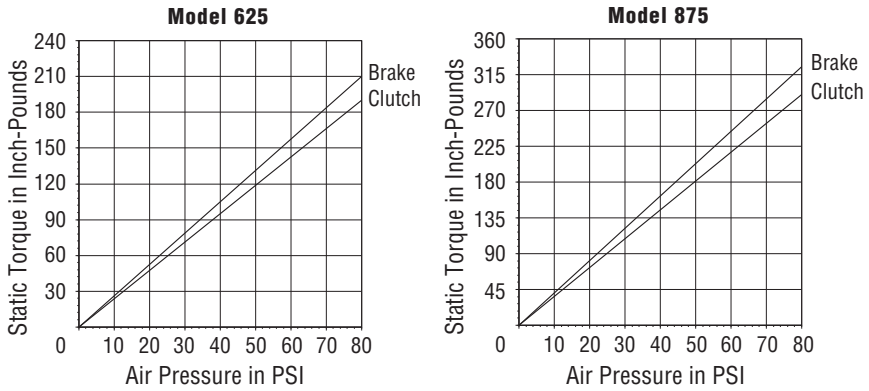

NOTE: Dynamic torque is approximately 85% of static torque.

FMCBE MODEL CLUTCH-BRAKES WITH LOCKING KEY- APPROXIMATE DIMENSIONS (INCHES)

Models 625 & 875

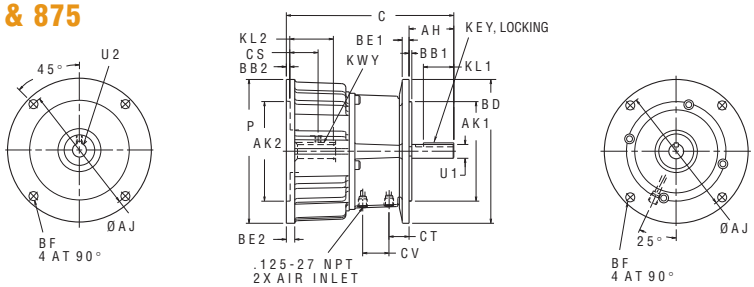

MODEL	PRODUCT NUMBER	AH	AJ	AK1 +.000 -.002	AK2 +.002 -.000	BB1	BB2	BD	BE1	BE2	BF	C	CS	CT	CV	KL1	KL2	P	KEY (SQ)	KWY WD	KWY DP	U1 +.000 -.001	U2 +.001 -.000
625	801677	2.06	5.875	4.499	4.501	0.12	0.16	6.50	0.31	0.38	.406	7.60	1.28	0.91	1.19	1.38	2.05	6.50	0.188	0.188	0.094	.625	.625
875	801680	2.11	5.875	4.499	4.501	0.12	0.19	7.00	0.39	0.56	.406	8.81	1.28	1.10	1.47	1.38	2.04	7.81	0.188	0.188	0.094	.875	.875

Models 625 & 875 with Input

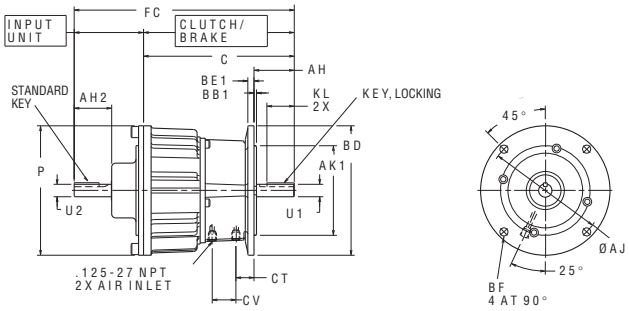

MODEL	PRODUCT NUMBER	AH	AJ	AK1 +.000 -.002	BB1	BE1	C	CT	CV	KL	KEY (SQ)	P	U1 +.000 -.001	INPUT NUMBER	U2 +.000 -.001	AH2	FC
625	801677	2.06	5.875	4.499	0.12	0.31	7.60	0.91	1.19	1.38	0.188	6.50	.625	929600	.875	1.89	11.09
875	801680	2.11	5.875	4.499	0.12	0.39	8.81	1.10	1.47	1.38	0.188	7.81	.875	928400	.875	1.89	12.30

BISSC Models 625 & 875

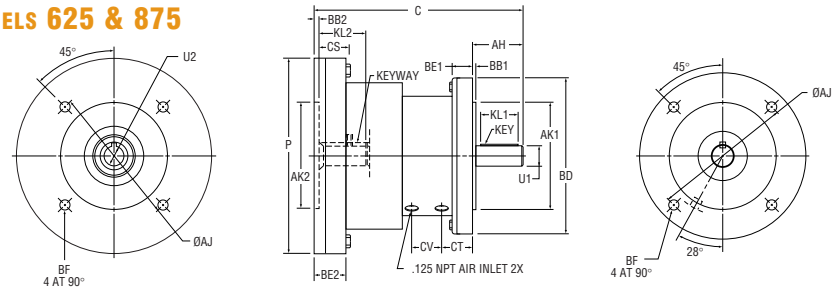

MODEL	PRODUCT NUMBER	AH	AJ	AK1 +.000 -.002	AK2 +.002 -.000	BB1	BB2	BD	BE1	BE2	BF	C	CS	CT	CV	KL1	KL2	P	KEY (SQ)	KWY WD	KWY DP	U1 +.000 -.001	U2 +.001 -.000
625	827272	2.06	5.875	4.499	4.501	0.12	0.16	6.50	0.83	1.12	.406	7.61	1.28	0.91	1.19	1.50	1.74	6.50	0.19	0.188	.093	.625	.625
875	827282	2.12	5.875	4.499	4.501	0.12	0.19	6.60	0.85	1.34	.406	8.82	1.28	1.10	1.47	1.50	2.02	8.20	0.19	0.188	.093	.875	.875

BISSC Models 625 & 875 with Input

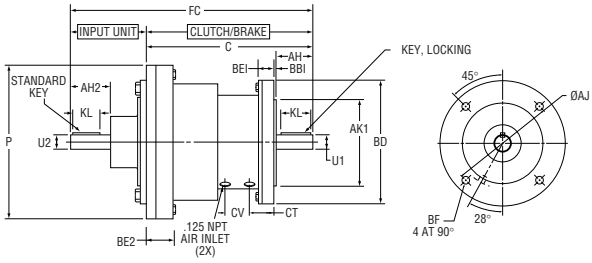

MODEL	PRODUCT NUMBER	AH	AJ	AK1 +.000 -.002	BB1	BD	BE1	BE2	C	CT	CV	FC	KL	KEY (SQ)	P	U1 +.000 -.001	INPUT NUMBER	U2 +.000 -.001	AH2
625	827272	2.06	5.875	4.499	.125	6.50	0.83	1.12	7.61	0.91	1.19	11.62	1.50	0.188	6.50	.625	929600	.875	1.89
875	827282	2.11	5.875	4.499	.125	6.50	0.85	1.34	8.82	1.30	1.27	12.84	1.50	0.188	7.81	.875	928400	.875	1.89

FMCB & FMCBE CLUTCH-BRAKES – MODELS 1125,1375 & 1625

FMCBE Flange Mounted Clutch-Brakes are designed for controlled starts and stops in hostile, dirty environments. Models 1125 and 1375 enclosed design prevents contaminants from interfering with operation of the units while keeping worn friction material from escaping into the environment. Model 1625 has an open housing. Choose from **3 Models**:

- **Bore sizes** of 1.125, 1.375 and 1.625 inches
- Units available in either electroless nickel plating or black oxide coating
- Meets NEMA standard 1.26.5 for waterproof machines
- Static Torque up to 2400 In. Lbs. (brake) and 2000 In. Lbs. (clutch)
- Overhung Load Capacity up to 600 lbs.
- Design Speed up to 1800 rpm. Consult factory for higher speed
- Flange mounts directly to motors and reducers
- Compatible with C-face motors up to 20 HP
- Optional Foot Mount is available for belt drive applications
- Optional Input Unit allows you to incorporate pulleys or couplings into your application
- Single, double acting piston makes overlap impossible
- For additional corrosion protection, contact the factory

FMCB & FMCBE (Totally Enclosed) Flange Mounted Clutch-Brakes

Standard Clutch-Brake is Flange Mounted. Order Foot Mount set separately for belt drive applications. Order Input Unit to incorporate pulleys into your application.

Model Number	Product Number	Bore (In)	HP_T Up To	Overhung Load Capacity (lbs) 1200 RPM	1800 RPM	Shipping Wt. Wt (Lbs)
Black Coating:						
FMCBE-1125	801600	1.125	0.33	360	240	68
FMCBE-1375	801622	1.375	0.44	525	350	89
FMCB-1625	801731	1.625	1.19	660	600	143
FMCBE-1625	801910	1.625	0.44	660	600	274
Nickel Coating:						
FMCBE-1125	801631	1.125	0.33	360	240	68
FMCBE-1375	801655	1.375	0.44	525	350	89
FMCBE-1625	801917	1.625	0.44	660	600	274

NOTE: Thermal Capacity (HP_T) and Overhung Load data is based upon 50% clutch and 50% brake usage.

Model Number	Product Number	Foot Mount Set (2 Mounts) Product Number	Shipping Wt. (Lbs)	Input Unit Product Number	Shipping Wt. (Lbs)
Black Coating:					
FMCBE-1125	801600	801603	6	935000	12
FMCBE-1375	801622	801603	6	936000	13
FMCB-1625	801731	801734	12	936001	14
Nickel Coating:					
FMCBE-1125	801631	801606	6	935041	12
FMCBE-1375	801655	801606	6	936041	13

NEMA Motor/Frame Selection Chart

Use this chart as specification and operational criteria for your application.

HP of Motor	RPM	Frame Number	Motor Shaft (In)	Clutch Brake Model Number
1	900	182TC	1.125	FMCBE-1125 Black & Nickel
1-1/2	1200	182TC	1.125	FMCBE-1125 Black & Nickel
1-1/2	900	184TC	1.125	FMCBE-1125 Black & Nickel
2	1200	184TC	1.125	FMCBE-1125 Black & Nickel
2	900	213TC	1.375	FMCBE-1375 Black & Nickel
3	1800	182TC	1.125	FMCBE-1125 Black & Nickel
3	1200	213TC	1.375	FMCBE-1375 Black & Nickel
3	900	215TC	1.375	FMCBE-1375 Black & Nickel
5	1800	184TC	1.125	FMCBE-1125 Black & Nickel
5	1200	215TC	1.375	FMCBE-1375 Black & Nickel
7-1/2	1800	213TC	1.375	FMCBE-1375 Black & Nickel
10	1800	215TC	1.375	FMCBE-1375 Black & Nickel
10	1200	2256TC	1.625	FMCB-1625 Black
15	1800	254TC	1.625	FMCB-1625 Black
15	1200	256TC	1.625	FMCB-1625 Black
20	1800	254TC	1.625	FMCB-1625 Black

Torque Vs. Air Pressure

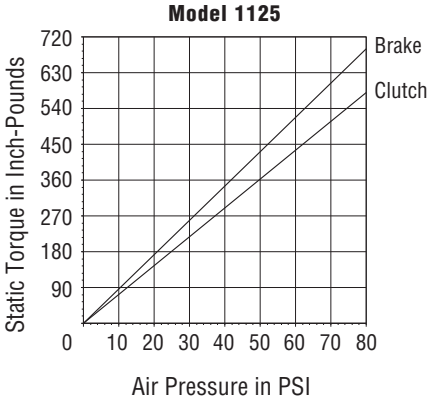

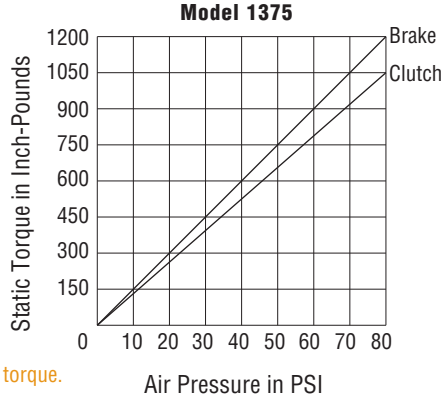

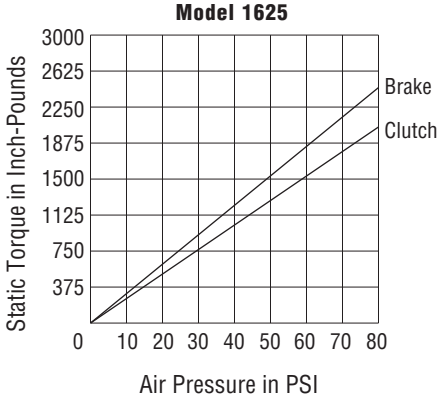

NOTE: Dynamic torque is approximately 85% of static torque.

FMCBE & FMCB MODEL CLUTCH-BRAKES - APPROXIMATE DIMENSIONS (INCHES)

Models 1125,1375 & 1625

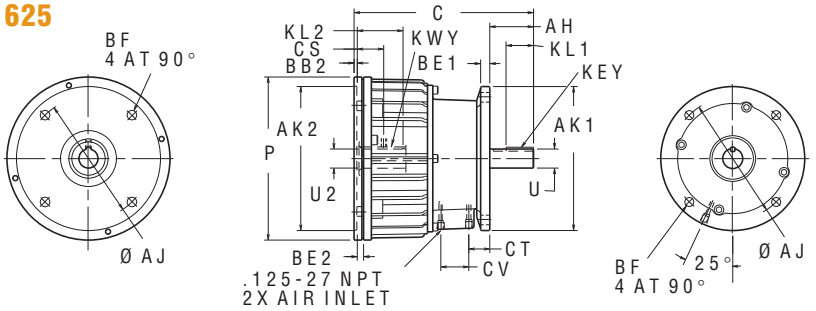

MODEL	PRODUCT NUMBER	AH	AJ	AK1 $^{+.000}_{-.002}$	AK2 $^{+.002}_{-.000}$	BB2	BE1	BE2	BF	C	CS	CT	CV	KL1	KL2	P	KEY (SQ)	KWY WD	KWY DP	U1 $^{+.000}_{-.001}$	U2 $^{+.001}_{-.000}$
1125	801600	2.58	7.250	8.499	8.501	0.19	0.54	0.37	.531	10.59	1.56	1.24	1.65	2.00	2.70	9.62	0.250	0.250	0.125	1.125	1.125
1375	801622	3.08	7.250	8.499	8.501	0.19	1.12	0.37	.500-13	12.12	1.77	1.60	1.91	2.56	3.18	10.38	0.312	0.312	0.156	1.375	1.375
1625	801731	3.75	7.250	8.499	8.501	0.30	1.35	0.31	.500-13	13.52	–	1.82	1.91	2.63	4.04	10.00	0.375	0.375	0.157	1.625	1.625
1625	801910	3.75	7.250	8.499	8.501	0.30	1.35	0.31	.500-13	13.52	–	1.82	1.91	2.63	4.04	10.00	0.375	0.375	0.157	1.625	1.625

Models 1125, 1375 & 1625 with Input

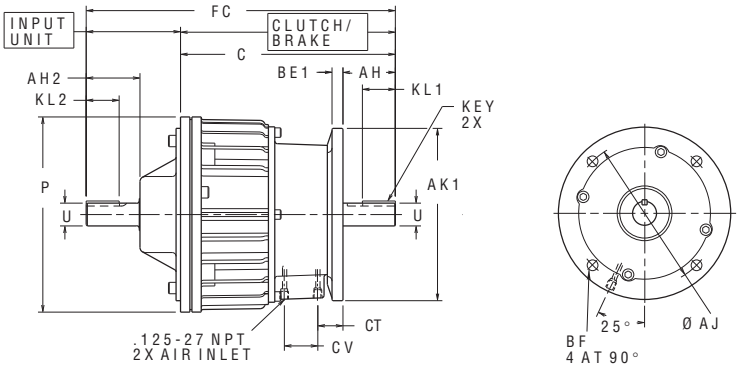

MODEL	PRODUCT NUMBER	AH	AJ	AK1 $^{+.000}_{-.002}$	BE	C	CT	CV	KL1	KEY (SQ)	P	U1 $^{+.000}_{-.001}$	INPUT NUMBER	U2 $^{+.000}_{-.001}$	AH2	FC	KL2
1125	801600	2.58	7.250	8.499	0.54	10.59	1.24	1.65	2.00	0.250	9.62	1.125	935000	1.125	2.62	15.22	1.62
1375	801622	3.08	7.250	8.499	1.12	12.12	1.60	1.91	2.56	0.312	10.38	1.375	936000	1.375	3.14	17.26	2.25
1625	801731	3.75	7.250	8.499	1.35	13.52	1.82	1.91	2.63	0.375	10.00	1.625	936001	1.625	3.75	19.76	2.63

Models 1125, 1375 & 1625 with Input & Foot

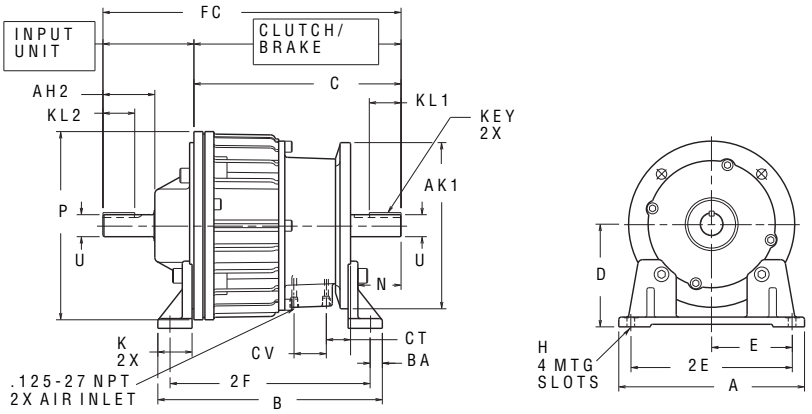

MODEL	PRODUCT NUMBER	AK $^{+.000}_{-.002}$	C	CT	CV	KL1	KEY (SQ)	P	U $^{+.000}_{-.001}$	INPUT NUMBER	AH2	FC	KL2
1125	801600	8.499	10.59	1.24	1.65	2.00	0.250	9.62	1.125	935000	2.62	15.22	1.62
1375	801622	8.499	12.12	1.60	1.91	2.56	0.312	10.38	1.375	936000	3.14	17.26	2.25
1625	801731	8.499	13.52	1.82	1.91	2.63	0.375	10.00	1.625	936001	3.75	19.71	2.63

MODEL	FOOT NUMBER	A	B	BA	D	E	2E	2F	H	K	N
1125	801603	9.50	11.48	.63	5.25	4.00	8.00	10.23	.56 x 1.00	1.75	2.21
1375	801603	9.50	12.51	.63	5.25	4.00	8.00	11.26	.56 x 1.00	1.75	2.71
1625	801734	9.50	13.39	.63	5.25	4.00	8.00	12.15	.56 x 1.00	1.75	3.38

FMCBES CLUTCH-BRAKES – MODELS 625 & 875

FMCBES Flange Mounted Clutch-Brakes come with a spring engaged brake and air engaged clutch. For applications where safety is a concern, this unit will engage the brake in the event of air pressure loss. Choose from **2 Models**:

- **Bore sizes** of 0.625 and .875 inches
- All units available in either electroless nickel plating or black oxide coating
- Meets NEMA standard 1.26.5 for waterproof machines
- Static Torque up to 142 In. Lbs. (brake) and 232 In. Lbs. (clutch)
- Overhung Load Capacity up to 292 pounds
- Design Speed up to 1800 rpm. Consult factory for higher speed
- Flange mounts directly to motors and reducers
- Compatible with C-face motors up to 1.5 HP
- Optional Foot Mount is available for belt drive applications
- Optional Input Unit allows you to incorporate pulleys or coupling into your application
- Single, double acting piston makes overlap impossible
- For additional corrosion protection, contact the factory

FMCBES Clutch-Brakes/Spring Engaged Brake

Standard Clutch-Brake is Flange Mounted. Order Foot Mount set separately for belt drive applications. Order Input Unit to incorporate pulleys into your application.

Model Number	Product Number	Bore (In)	HP_T Up To	Overhung Load Capacity (Lbs) 1200 RPM	1800 RPM	Shipping Wt. Wt (Lbs)
Black Coating:						
FMCBES-625	801623	0.625	0.14	138	92	24
FMCBES-875	801624	0.875	0.18	292	195	40
Nickel Coating:						
FMCBES-625	801656	0.625	0.14	138	92	24
FMCBES-875	801657	0.875	0.18	292	195	40

NOTE: Thermal Capacity (HP_T) and Overhung Load data is based upon 50% clutch and 50% brake usage.

Model Number	Product Number	Foot Mount Set (2 Mounts) Product Number	Shipping Wt. (Lbs)	Input Unit Product Number	Shipping Wt. Wt (Lbs)
Black Coating:					
FMCBES-625	801623	801431	4	929600	7
FMCBES-875	801624	801431	4	928400	7
Nickel Coating:					
FMCBES-625	801656	827251	4	827270	7
FMCBES-875	801657	827261	4	827280	7

NEMA Motor/Frame Selection Chart

Use this chart as specification and operational criteria for your application.

HP of Motor	RPM	Frame Number	Motor Shaft (In)	Clutch-Brake Model Number
1/4	1800	56C	0.625	FMCBES-625
1/4	1200	56C	0.625	FMCBES-625
1/3	1800	56C	0.625	FMCBES-625
1/3	1200	56C	0.625	FMCBES-625
1/2	1800	56C	0.625	FMCBES-625
1/2	1200	56C	0.625	FMCBES-625
1/2	900	143TC	0.875	FMCBES-875
3/4	1800	56C	0.625	FMCBES-625
3/4	1200	143TC	0.875	FMCBES-875
3/4	900	145TC	0.875	FMCBES-875
1	1800	56TC	0.625	FMCBES-625
1	1800	143TC	0.875	FMCBES-875
1	1200	145TC	0.875	FMCBES-875
1-1/2	1800	145TC	0.875	FMCBES-875
2	1800	145TC	0.875	FMCBES-875

Torque Vs. Air Pressure

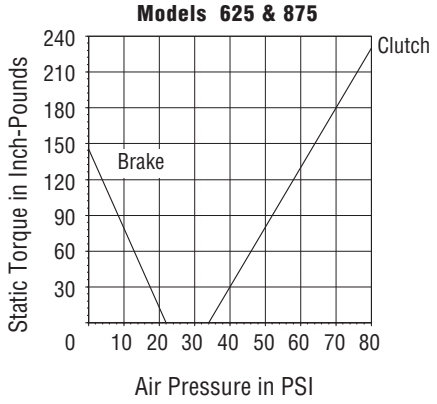

FMCBES MODEL CLUTCH-BRAKES/SPRING ENGAGED BRAKE - APPROXIMATE DIMENSIONS (INCHES)

Models 625 & 875

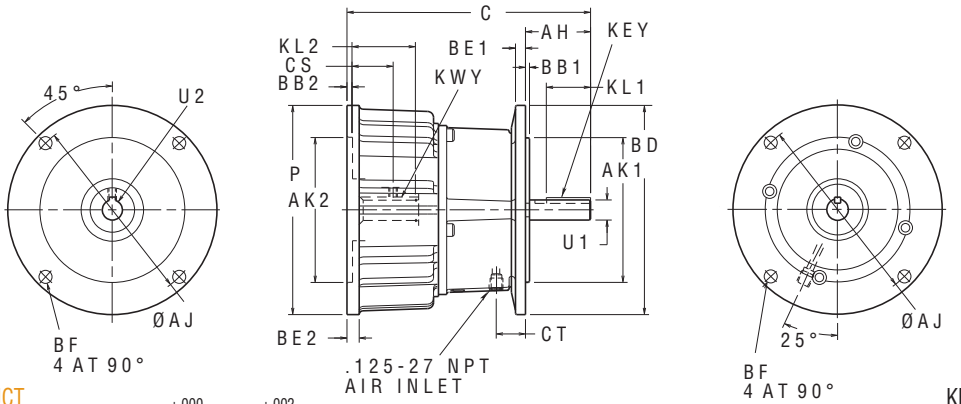

MODEL	PRODUCT NUMBER	AH	AJ	AK1 $^{+.000}_{-.002}$	AK2 $^{+.002}_{-.000}$	BB1	BB2	BD	BE1	BE2	BF	C	CS	CT	KL1	KL2	P	KEY (SQ)	KWY WD	KWY DP	U1 $^{+.000}_{-.001}$	U2 $^{+.001}_{-.000}$
625	801623	2.06	5.88	4.499	4.501	0.14	0.19	7.00	0.38	0.56	.406	8.74	1.28	1.08	1.38	2.05	7.81	0.188	0.188	0.094	.625	.625
875	801624	2.12	5.88	4.499	4.501	0.14	0.19	7.00	0.38	0.56	.406	8.81	1.28	1.08	1.38	2.05	7.81	0.188	0.188	0.094	.875	.875

Models 625 & 875 with Input

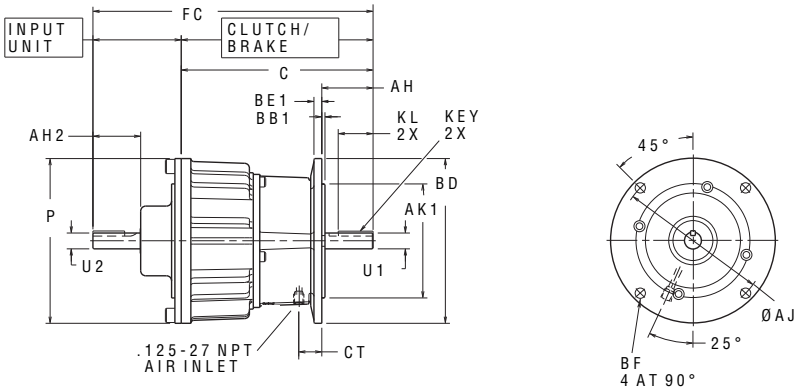

MODEL	PRODUCT NUMBER	AH	AJ	AK1 $^{+.000}_{-.002}$	BB1	BE1	C	CT	KL	KEY (SQ)	P	U1 $^{+.000}_{-.001}$	INPUT NUMBER	U2 $^{+.000}_{-.001}$	AH2	FC
625	801623	2.06	5.875	4.499	0.14	0.38	8.74	1.08	1.38	0.188	7.81	.625	929600	.875	1.883	12.227
875	801624	2.12	5.875	4.499	0.14	0.38	8.81	1.08	1.38	0.188	7.81	.875	928400	.875	1.893	12.300

Models 625 & 875 with Input & Foot

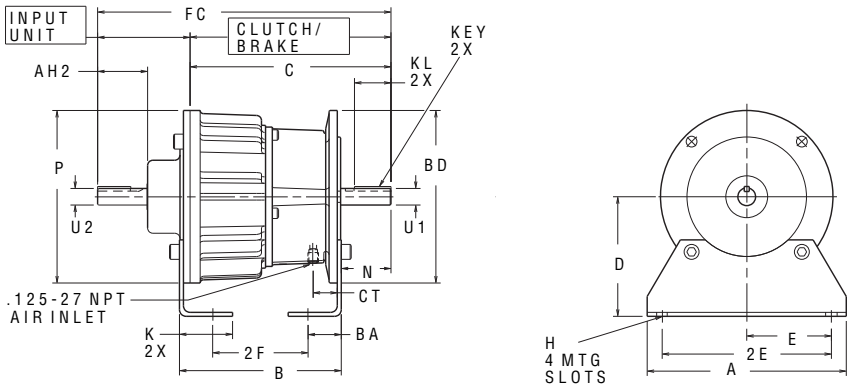

MODEL	PRODUCT NUMBER	BD	C	CT	KL	KEY (SQ)	P	U1 $^{+.000}_{-.001}$	INPUT NUMBER	U2 $^{+.000}_{-.001}$	AH2	FC
625	801623	7.00	8.74	1.08	1.38	0.188	7.81	.625	929600	.875	1.88	12.23
875	801524	7.00	8.81	1.08	1.38	0.188	7.81	.875	928400	.875	1.89	12.30

MODEL	FOOT NUMBER	A	B	BA	D	E	2E	2F	H	K	N
625	801431	7.50	7.25	1.25	4.51	3.19	6.38	4.74	.41 x .88	2.00	1.90
875	801431	7.50	7.25	1.25	4.51	3.19	6.38	4.74	.41 x .88	2.00	1.96

FMCBES CLUTCH-BRAKES – MODELS 1125 & 1375

FMCBES Flange Mounted Clutch-Brakes come with a spring engaged brake and air engaged clutch. For applications where safety is a concern, this unit will engage the brake in the event of air pressure loss. Choose from **2 Models**:

- **Bore sizes** of 1.125 and 1.375 inches
- All units available in either electroless nickel plating or black oxide coating
- Meets NEMA standard 1.26.5 for waterproof machines
- Static Torque up to 495 In. Lbs. (brake) and 680 In. Lbs. (clutch)
- Overhung Load Capacity up to 525 pounds
- Design Speed up to 1800 rpm. Consult factory for higher speed
- Flange mounts directly to motors and reducers
- Compatible with C-face motors up to 10 HP
- Optional Foot Mount is available for belt drive applications
- Optional Input Unit allows you to incorporate pulleys or coupling into your application
- Single, double acting piston makes overlap impossible
- For additional corrosion protection, contact the factory

FMCBES Clutch-Brakes/Spring Engaged Brake

Standard Clutch-Brake is Flange Mounted. Order Foot Mount set separately for belt drive applications. Order Input Unit to incorporate pulleys into your application.

Model Number	Product Number	Bore (In)	HP_T Up To	Overhung Load Capacity (Lbs) 1200 RPM	1800 RPM	Shipping Wt. (Lbs)
Black Coating:						
FMCBES-1125	801625	1.125	0.33	360	240	68
FMCBES-1375	801626	1.375	0.44	525	350	89
Nickel Coating:						
FMCBES-1125	801658	1.125	0.33	360	240	68
FMCBES-1375	801659	1.375	0.44	525	350	89

NOTE: Thermal Capacity (HP_T) and Overhung Load data is based upon 50% clutch and 50% brake usage.

Model Number	Product Number	Foot Mount Set (2 Mounts) Product Number	Shipping Wt. (Lbs)	Input Unit Product Number	Shipping Wt. (Lbs)
Black Coating:					
FMCBES-1125	801625	801603	6	935000	12
FMCBES-1375	801626	801603	6	936000	13
Nickel Coating:					
FMCBES-1125	801658	801606	6	935041	12
FMCBES-1375	801659	801606	6	936041	13

NEMA Motor/Frame Selection Chart

Use this chart as specification and operational criteria for your application.

HP of Motor	RPM	Frame Number	Motor Shaft (IN)	Clutch-Brake Model Number
1	900	182TC	1.125	FMCBES-1125
1-1/2	1200	182TC	1.125	FMCBES-1125
1-1/2	900	184TC	1.125	FMCBES-1125
2	1200	184TC	1.125	FMCBES-1125
2	900	213TC	1.375	FMCBES-1375
3	1800	182TC	1.125	FMCBES-1125
3	1200	213TC	1.375	FMCBES-1375
3	900	215TC	1.375	FMCBES-1375
5	1800	184TC	1.125	FMCBES-1125
5	1200	215TC	1.375	FMCBES-1375
7-1/2	1800	213TC	1.375	FMCBES-1375
10	1800	215TC	1.375	FMCBES-1375

Torque Vs. Air Pressure

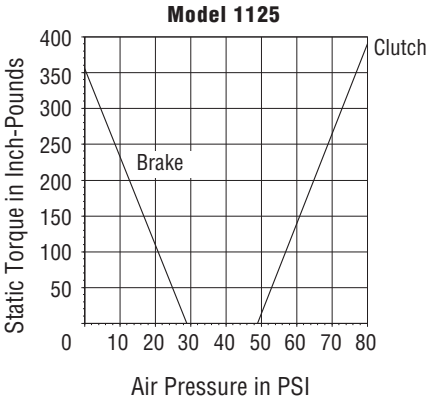

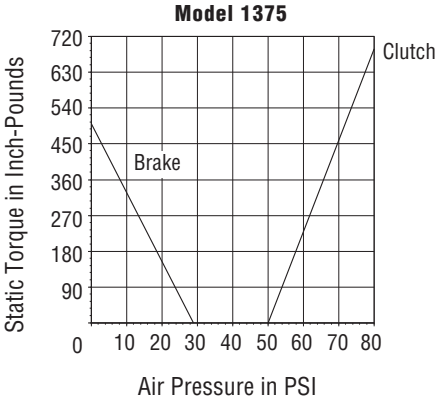

FMCBES MODEL CLUTCH-BRAKES/SPRING ENGAGED BRAKE - APPROXIMATE DIMENSIONS (INCHES)

Models 1125 & 1375

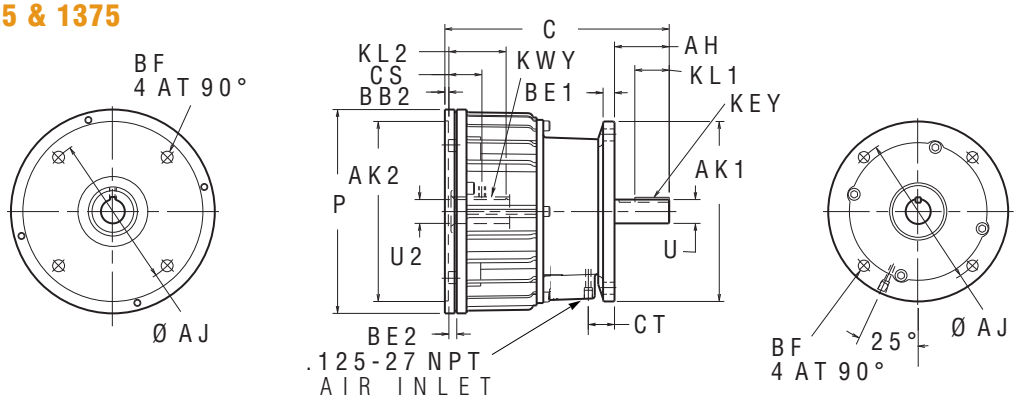

MODEL	PRODUCT NUMBER	AH	AJ	AK1 $^{+.000}_{-.002}$	AK2 $^{+.002}_{-.000}$	BB2	BE1	BE2	BF	C	CS	CT	KL1	KL2	P	KEY (SQ)	KWY WD	KWY DP	U1 $^{+.000}_{-.001}$	U2 $^{+.001}_{-.000}$
1125	801625	2.58	7.250	8.499	8.501	0.19	0.54	0.37	.531	10.59	1.56	1.24	2.00	2.70	9.62	0.250	0.250	0.125	1.125	1.125
1375	801626	3.08	7.250	8.499	8.501	0.19	1.12	0.37	.500-13	12.12	1.77	1.60	2.41	3.18	10.38	0.312	0.312	0.156	1.375	1.375

Models 1125 & 1375 with Input

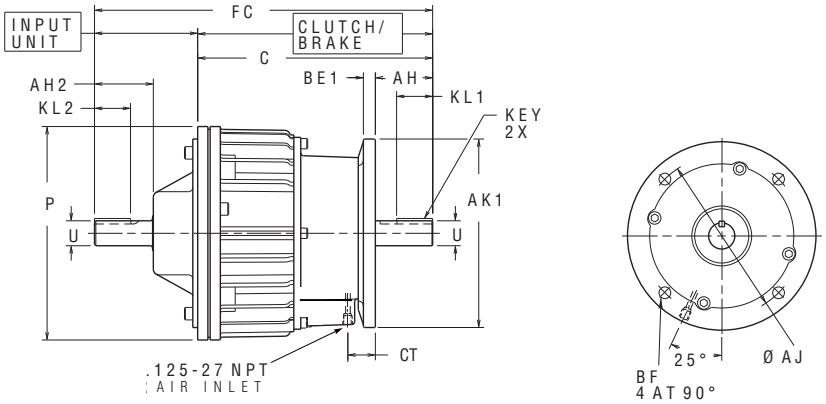

MODEL	PRODUCT NUMBER	AH	AJ	AK1 $^{+.000}_{-.002}$	BE1	BF	C	CT	KL1	KEY (SQ)	P	U $^{+.000}_{-.001}$	INPUT NUMBER	AH2	FC	KL2
1125	801625	2.58	7.250	8.499	0.54	.531	10.59	1.24	2.00	0.250	9.62	1.125	935000	2.62	15.22	1.62
1375	801626	3.08	7.250	8.499	1.12	.500-13	12.12	1.60	2.56	0.312	10.38	1.375	936000	3.14	17.26	2.25

Models 1125 & 1375 with Input & Foot

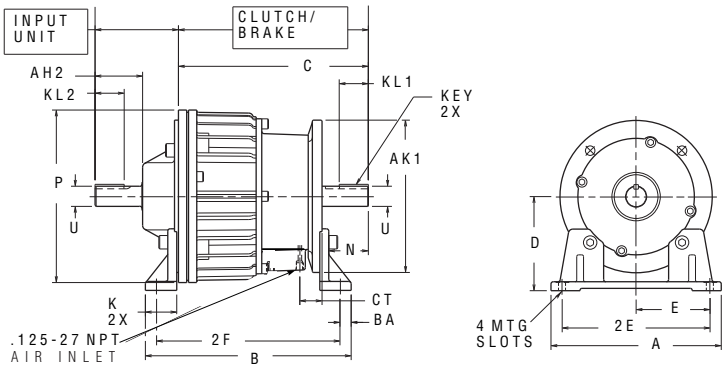

MODEL	PRODUCT NUMBER	AK $^{+.000}_{-.002}$	C	CT	KL1	KEY (SQ)	P	U $^{+.000}_{-.001}$	INPUT NUMBER	AH2	FC	KL2
1125	801625	8.499	10.59	1.24	2.00	0.250	9.62	1.125	935000	2.62	15.22	1.62
1375	801626	8.499	12.12	1.60	2.56	0.312	10.38	1.375	936000	3.14	17.26	2.25

MODEL	FOOT NUMBER	A	B	BA	D	E	2E	2F	H	K	N
1125	801603	9.50	11.48	0.62	5.250	4.12	8.06	10.23	.56 x 1.00	1.75	2.21
1375	801603	9.50	12.51	0.62	5.250	4.12	8.06	11.26	.56 x 1.00	1.75	2.71

FMCE CLUTCHES

FMCE Flange Mounted Clutches are excellent in hostile, dirty environments where only a clutch is required. The totally enclosed design functions perfectly in areas where dirt, dust, moisture or other contaminants interfere. Choose from **4 Models**:

- Static Torque up to 1050 In. Lbs.
- Thermal Horsepower rating up to 0.18 @ 1800 rpm
- **Bore sizes** of 0.625 to 1.375 inches
- Available in black oxide coating
- Overhung Load Capacity up to 525 pounds
- Design Speed up to 1800 rpm. Consult factory for higher speed
- Mounts either vertically or horizontally
- Operates on static air pressure, requiring no expensive control system
- Optional Foot Mount is available for offset drive applications
- Optional Input Unit allows you to incorporate pulleys or coupling into your application

NOTE: Dynamic torque is approximately 85% of static torque.

FMCE Clutch, Totally Enclosed

Standard Clutch-Brake is Flange Mounted. Order Foot Mount set separately for offest drive applications. Order Input Unit to incorporate pulleys into your application.

Model Number	Product Number	Bore (In)	HP_T Up To	Overhung Load Capacity (lbs) 1200 RPM	1800 RPM	Shipping Wt. (Lbs)
FMCE-625	801489	0.625	0.14	138	92	24
FMCE-875	801493	0.875	0.18	292	195	40
FMCE-1125	964409	1.125	0.33	360	240	68
FMCE-1375	964410	1.375	0.44	525	350	89

Model Number	Product Number	Foot Mount Set (2 Mounts) Product Number	Shipping Wt. (Lbs)	Input Unit Product Number	Shipping Wt. (Lbs)
FMCE-625,	801489	801431	4	929600	7
FMCE-875	801493	801431	4	928400	7
FMCE-1125	964409	801603	6	935000	12
FMCE-1375	964410	801603	6	936000	13

NEMA Motor/Frame Selection Chart

Use this chart as specification and operational criteria for your application.

HP of Motor	RPM	Frame Number	Motor Shaft (IN)	Clutch-Brake Model Number
1/4	1800	56C	0.625	FMCE-625
1/4	1200	56C	0.625	FMCE-625
1/3	1800	56C	0.625	FMCE-625
1/3	1200	56C	0.625	FMCE-625
1/2	1800	56C	0.625	FMCE-625
1/2	1200	56C	0.625	FMCE-625
1/2	900	143TC	0.875	FMCE-875
3/4	1800	56C	0.625	FMCE-625
3/4	1200	143TC	0.875	FMCE-875
3/4	900	145TC	0.875	FMCE-875
1	1800	56TC	0.625	FMCE-625
1	1800	143TC	0.875	FMCE-875
1	1200	145TC	0.875	FMCE-875
1	900	182TC	1.125	FMCE-1125

HP of Motor	RPM	Frame Number	Motor Shaft (IN)	Clutch-Brake Model Number
1-1/2	1800	145TC	0.875	FMCE-875
1-1/2	1200	182TC	1.125	FMCE-1125
1-1/2	900	184TC	1.125	FMCE-1125
2	1800	145TC	0.875	FMCE-875
2	1200	184TC	1.125	FMCE-1125
2	900	213TC	1.375	FMCE-1375
3	1800	182TC	1.125	FMCE-1125
3	1200	213TC	1.375	FMCE-1375
3	900	215TC	1.375	FMCE-1375
5	1200	215TC	1.375	FMCE-1375
5	1800	184TC	1.125	FMCE-1125
7-1/2	1800	213TC	1.375	FMCE-1375
10	1800	215TC	1.375	FMCE-1375

Torque Vs. Air Pressure

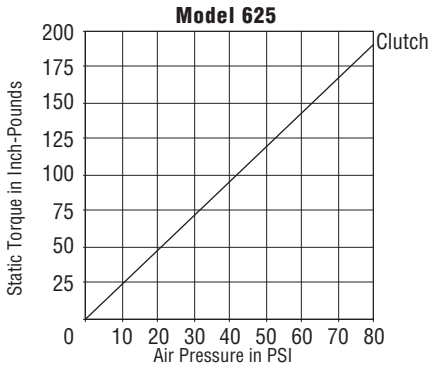

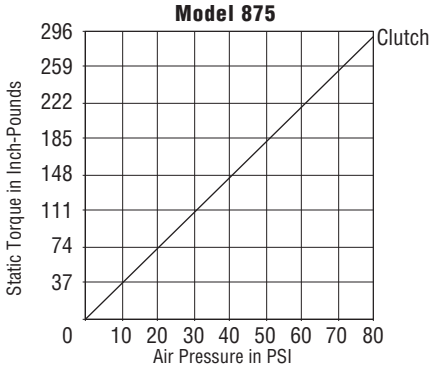

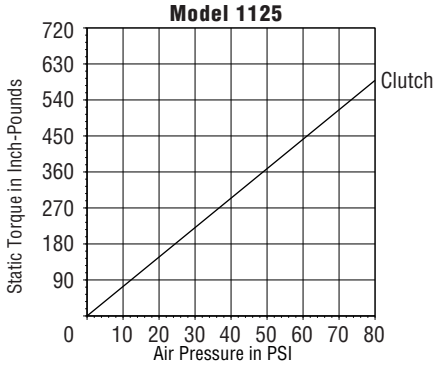

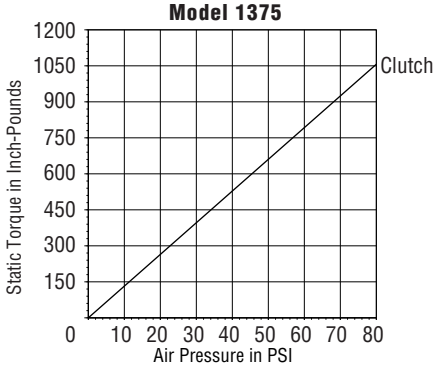

FMCE MODEL CLUTCH - APPROXIMATE DIMENSIONS (INCHES)

Models 625, 875, 1125 & 1375

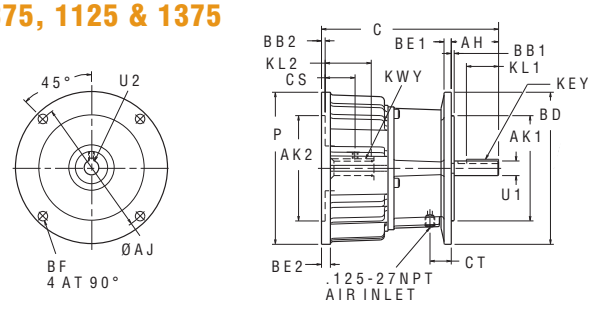

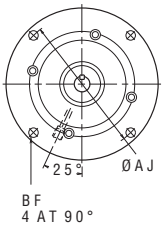

MODEL	PRODUCT NUMBER	AH	AJ	AK1 $^{+.000}_{-.002}$	AK2 $^{+.002}_{-.000}$	BB1	BB2	BD	BE1	BE2	BF	C	CS	CT	KL1	KL2	P	KEY (SQ)	KWY WD	KWY DP	U1 $^{+.000}_{-.001}$	U2 $^{+.001}_{-.000}$
625	801489	2.06	5.88	4.499	4.501	0.12	0.16	6.50	0.31	0.56	.406	7.61	1.28	0.91	1.38	1.97	6.50	.188	.188	.094	.625	.625
875	801493	2.11	5.88	4.499	4.501	0.12	0.19	7.00	0.39	0.56	.406	7.97	1.28	1.10	1.38	2.04	7.81	.188	.188	.094	.875	.875
1125	964409	2.58	7.25	8.498	8.501	–	0.19	8.498	0.54	0.37	.562	10.59	1.75	1.30	2.00	2.90	9.63	.250	.250	.125	1.125	1.125
1375	964410	3.08	7.25	8.498	8.501	–	0.19	8.498	1.12	0.37	.531	12.12	1.96	1.60	2.41	3.39	10.38	.312	.312	.156	1.375	1.375

Models 625 & 875 with Input

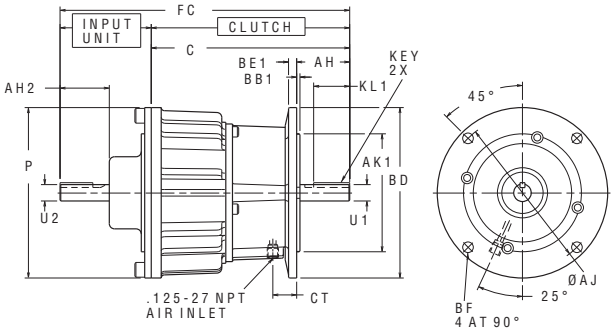

MODEL	PRODUCT NUMBER	AH	AJ	AK1 $^{+.000}_{-.002}$	BB1	BD	BE1	C	CT	KL	KEY (SQ)	P	U1 $^{+.000}_{-.001}$	INPUT NUMBER	U2 $^{+.000}_{-.001}$	AH2	FC
625	801489	2.06	5.88	4.499	0.12	6.50	0.31	7.61	0.91	1.38	0.188	6.50	.625	929600	.875	1.89	11.10
875	801493	2.11	5.88	4.499	0.12	7.00	0.39	7.97	1.10	1.38	0.188	7.81	.875	928400	.875	1.89	11.46

Models 625 & 875 with Input & Foot

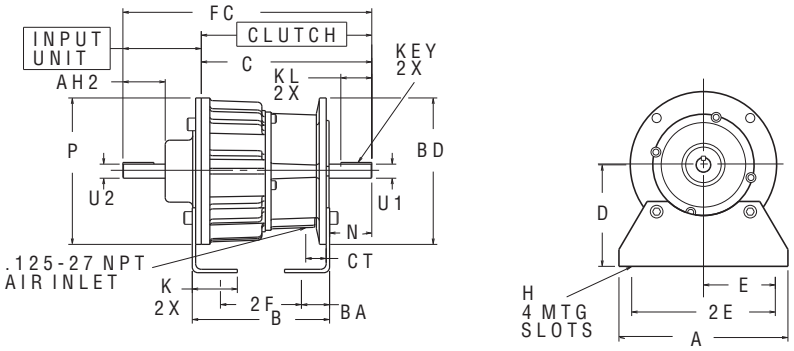

MODEL	PRODUCT NUMBER	BD	C	CT	KL	KEY (SQ)	P	U1 $^{+.000}_{-.001}$	INPUT NUMBER	U2 $^{+.000}_{-.001}$	AH2	FC
625	801489	6.50	7.61	0.91	1.38	0.188	6.50	.625	929600	.875	1.89	11.10
875	801493	7.00	7.97	1.10	1.38	0.188	7.81	.875	928400	.875	1.89	11.46

MODEL	FOOT NUMBER	A	B	BA	D	E	2E	2F	H	K	N
625	801431	7.50	6.10	1.25	4.50	3.19	6.38	3.60	.41 x .88	2.00	1.91
875	801431	7.50	6.41	1.25	4.50	3.19	6.38	3.91	.41 x .88	2.00	1.96

MODULAR CLUTCH-BRAKE SYSTEM

Custom design a power transmission system to fit your specific requirements using the Nexen Modular Clutch-Brake "Building Block" System. Interchangeable modular components provide you with complete flexibility both for today's requirements and for tomorrow's changing needs.

Construct your own Clutch, Brake or Clutch-Brake system to meet your application needs, selecting only those modules required for today's job. Whenever plans change, you can easily add or subtract modules to construct a new application configuration. Customization through the use of standard interchangeable components saves you both time and money.

The Modular Clutch-Brake System allows you almost limitless design control, provides time and cost savings, while providing you with the efficiency of air operation.

Modular Application Configurations

Four Modular Units (Brake, Drive, Input and Output) are the cornerstone of the System. Used either alone or in combination, they allow you to construct a variety of modular application configurations.

- Clutches (Input or Output)
- Brakes (Input or Output)
- Clutch-Brakes (Input or Output)

Once you've determined a configuration, you are provided these additional choices:

- Static Torque capacity up to 1150 In. Lbs. (Clutch) and 1550 In. Lbs. (Brake)
- Design Speed up to 1800 rpm. Consult factory for higher speed
- Thermal Horsepower rating up to 0.77 @ 1800 rpm
- 4 Standard Bore/Shaft sizes ranging from 0.625 to 1.375 inches
- Overhung Load Capacity up to 700 pounds
- Mounting flexibility: Vertically, Horizontally, Gearbox to C-Faced Motor or reducer
- Optional Foot Mount is available in 2 different designs

Advantages of the Modular System

- Compatible with C-face motors up to 10 HP
- Operates on static air pressure for fast, dependable response, soft starts and positive stops, while eliminating the need for expensive control systems
- Less heat build-up. Special fin designed friction discs cool the interior, dissipate heat and decrease torque fade
- Longer Life through forced air cooling
- Self-adjusting clutch and brake modules get the most out of friction material; torque output is constant
- Interchangeability with electric modular units is easy, due to conformity with standard NEMA specifications

Modular Clutches, Brakes and Clutch-Brakes

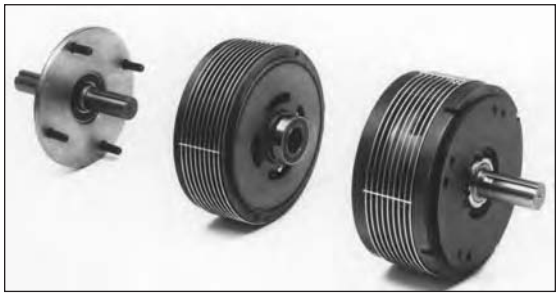

MBU Brake

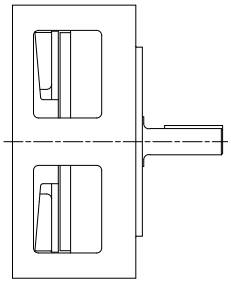

MDO Clutch

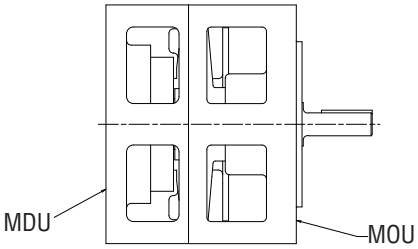

MDB Clutch-Brake

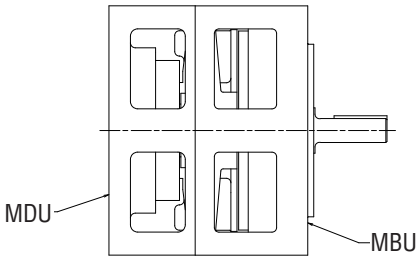

MIDO Input Clutch

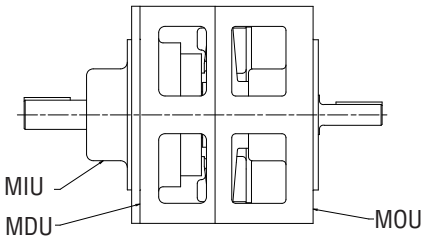

MIB Input Brake

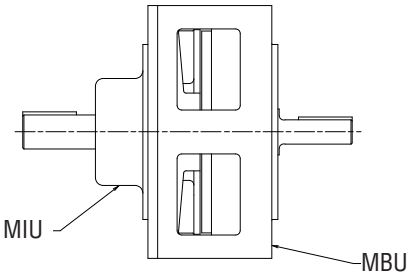

MIDB Input Clutch-Brake

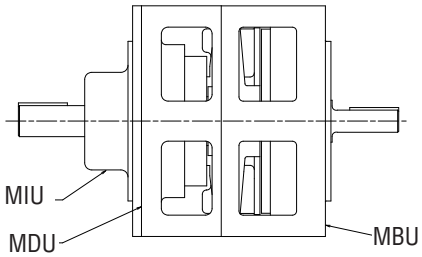

MIDO Foot Mounted Input Clutch

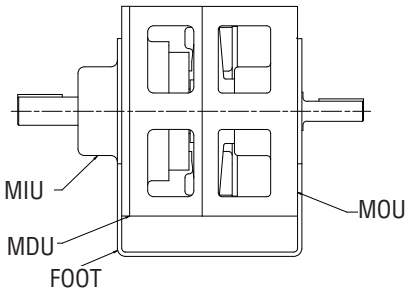

MIDB Foot Mounted Input Clutch-Brake

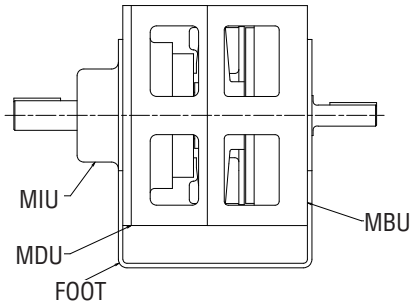

Designing Your Modular System

Designing your system is easily accomplished in 5 steps:

1. Determine the functions your system must perform -
   - Starting (Clutch configuration)
   - Stopping (Brake configuration)
   - Starting & Stopping (Clutch-Brake configuration)
2. Determine your application configuration using the Typical Application drawings on below.
3. A Modular Assembly is designated for each Application (i.e. MIB, MIDO, etc.) Modular Assemblies consist of one or more Module Units. The various Module Assemblies and the Units which comprise them are shown on page 243.

Typical Applications

Input Brake mounted to a Reducer and coupled to a Motor (MIB)

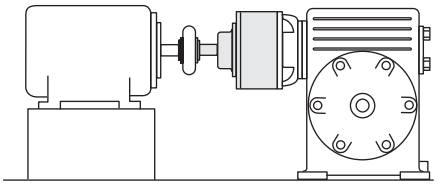

Input Clutch or Input Clutch-Brake mounted to a Reducer and coupled to a Motor (MIDO or MIDB)

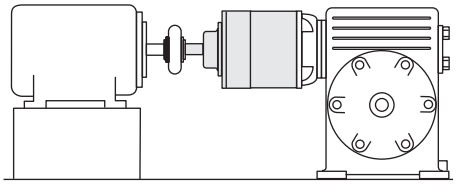

Clutch-Brake on C-Faced Motor (MDB)

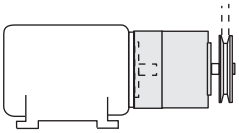

Input Clutch or Input Clutch-Brake With Foot Mount (MIDO or MIDB w/foot)

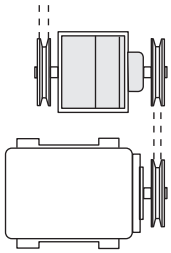

Brake mounted between Motor and Reducer (MBU)

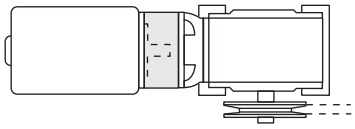

Input Brake Unit mounted directly to a Reducer (MIB)

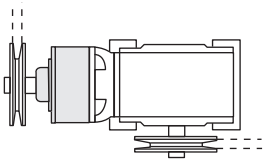

Input Clutch or Input Clutch-Brake mounted directly to a Reducer (MIDO or MIDB)

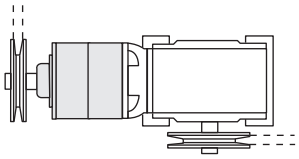

Clutch or Clutch-Brake Unit mounted to a Motor and Reducer (MDO or MDB)

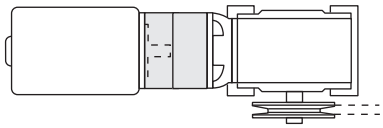

Brake Unit mounted on a C-Face Motor (MBU)

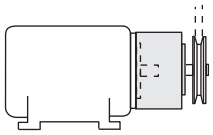

Input Clutch or Input Clutch-Brake with Foot coupled to a Foot Mounted Motor (MIDO or MIDB w/foot

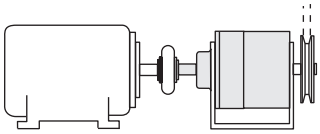

NEMA Motor/Frame Selection Chart①

Use this chart as specification and operational criteria for your application.

HP of Motor	RPM	Frame Number	Motor Shaft (IN)	Modular System
1/2	1800	56C	0.625	625
1/2	1200	56C	0.625	625
1/2	900	143TC	0.875	875
3/4	1800	56C	0.625	625
3/4	1200	143TC	0.875	875
3/4	900	145TC	0.875	875
1	1800	56C	0.625	625
1	1800	143TC	0.875	875
1	1200	145TC	0.875	875
1	900	182TC	1.125	1125
1-1/2	1800	145TC	0.875	875
1-1/2	1200	182TC	1.125	1125
1-1/2	900	184TC	1.125	1125
2	1800	145TC	0.875	875
2	1200	184TC	1.125	1125
2	900	213TC	1.375	1375
3	1800	182TC	1.125	1125
3	1200	213TC	1.375	1375
3	900	215TC	1.375	1375
5	1800	184TC	1.125	1125
5	1200	215TC	1.375	1375
7-1/2	1800	213TC	1.375	1375
10	1800	215TC	1.375	1375

① Models FMCBE - 625 & 875, Shown on pages 229 - 237 are recommended for Single Phase Motors.

Overhung Load Data

Values are based upon 10,000 hours of bearing life with the load one inch from pilot face.

Modular System	Module	Lbs. @ 1200 RPM	Lbs. @ 1800 RPM
625	Brake, MBU	321	281
	Output, MOU	321	281
	Input, MIU	279	244
875	Brake, MBU	321	281
	Output, MOU	321	281
	Input, MIU	279	244
1125	Brake, MBU	636	554
	Output, MOU	636	554
	Input, MIU	655	570
1375	Brake, MBU	700	610
	Output, MOU	700	610
	Input, MIU	655	570

Thermal Capacity Data (HP_T)

Standard Modular Systems (Open Design)

Modular Assembly	RPM	625	875	1125	1375
Brake	1800	0.23	0.23	0.33	0.50
MBU	1200	0.20	0.20	0.30	0.46
Clutch	1800	0.44	0.44	0.53	0.77
MDO	1200	0.40	0.40	0.50	0.71
Clutch-Brake	1800	0.40	0.40	0.50	0.75
MDB	1200	0.35	0.35	0.45	0.70
Input Brake	1800	0.23	0.23	0.33	0.50
MIB	1200	0.20	0.20	0.30	0.46
Input Clutch	1800	0.44	0.44	0.53	0.77
MIDO	1200	0.40	0.40	0.50	0.71
Input Clutch-Brake	1800	0.40	0.40	0.50	0.75
MIDB	1200	0.35	0.35	0.45	0.70

Designing Your Modular System, cont.

4. Select the correct Modular Assembly System size.
   - Using the NEMA Motor/Frame Selection Chart, find the frame size, horsepower and output rpm of the motor you will be using. The size of the compatible Modular System is shown in the right hand column. Make a note of this number.
   - If your chosen Modular Assembly calls for a Brake (B), an Output Unit (O), an Input Unit (I) or a combination of these, consult the Overhung Load Data chart to know the limits of the Modular System Size chosen.
   - Review the Thermal Capacity chart to familiarize yourself with the rating of your chosen Modular Assembly by Size.
   - Review the Torque charts to ensure your selected System Size falls within your guidelines.

NOTE: Whenever Modular System Product values are less than your operational values, move up to a System Size to meet your specifications. Moving to a higher System Size may affect motor and frame size requirements.

Designing Your Modular System, cont.

5. Find your chosen System Size on the following pages. Locate your chosen Modular Assembly on the right hand column. The Product Numbers listed in the column are those components required to construct your Modular System. Order each separately.

Dimensional characteristics of each Modular Assembly can be found on the following pages.

625 Modular System Components (0.625 inch bore/shaft):

To achieve the Modular Assemblies shown for the Typical Applications:

1. Find the applicable component Model designation in the table below;
2. Order one of each of the product numbers shown in the column.

Module Component	Model Number	Product Number	Module Shipping Wt. (Lbs)	Model MBU Brake Only	Model MDO Clutch Only	Model MDB Clutch-Brake	Model MIB Input Brake	Model MIDO Input Clutch	Model MIDO-WF Input Clutch w/Foot	Model MIDB Input Clutch-Brake	Model MIDB-WF Input Clutch-Brake w/Foot
Brake Unit	MBU625	928500	18	928500	--	928500	928500	--	--	928500	928500
Drive Unit	MDU625	928600	13	--	928600	928600	--	928600	928600	928600	928600
Input Unit	MIU625	929600	7	--	--	--	929600	929600	929600	929600	929600
Output Unit	MOU625	928800	12	--	928800	--	--	928800	928800	--	--
Foot, U Shape		929300	3	--	--	--	--	--	929300	--	929300

Options for 625 Modular System:

Optional Component	Model Number	Product Number	Shipping Wt. (Lbs)	Comments
Foot, L Shape	MDU-625	931000	3	Use in place of "U" Shaped Foot Mount.
Drip Proof Guard	MDU-625	929501	1	Product Thermal Capacity reduced to .20 HP_t
Drip Proof Guard	MBU-625	929502	1	Product Thermal Capacity reduced to .20 HP_t

875 Modular System Components (0.875 inch bore/shaft):

To achieve the Modular Assemblies shown for the Typical Applications:

1. Find the applicable component Model designation in the table below;
2. Order one of each of the product numbers shown in the column.

Module Component	Model Number	Product Number	Module Shipping Wt. (Lbs)	Model MBU Brake Only	Model MDO Clutch Only	Model MDB Clutch-Brake	Model MIB Input Brake	Model MIDO Input Clutch	Model MIDO-WF Input Clutch w/Foot	Model MIDB Input Clutch-Brake	Model MIDB-WF Input Clutch-Brake w/Foot
Brake Unit	MBU875	928000	18	928000	--	928000	928000	--	--	928000	928000
Drive Unit	MDU875	928100	13	--	928100	928100	--	928100	928100	928100	928100
Input Unit	MIU875	928400	7	--	--	--	928400	928400	928400	928400	928400
Output Unit	MOU875	928700	12	--	928700	--	--	928700	928700	--	--
Foot, U Shape		929300	3	--	--	--	--	--	929300	--	929300

Options for 875 Modular System:

Optional Component	Model Number	Product Number	Shipping Wt. (Lbs)	Comments
Foot, L Shape	MDU-875	931000	3	Use in place of "U" Shaped Foot Mount.
Drip Proof Guard	MDU-875	929501	1	Product Thermal Capacity reduced to .20 HP_t
Drip Proof Guard	MBU-875	929502	1	Product Thermal Capacity reduced to .20 HP_t

1125 Modular System Components (1.125 inch bore/shaft):

To achieve the Modular Assemblies shown for the Typical Applications:

1. Find the applicable component Model designation in the table below;
2. Order one of each of the product numbers shown in the column.

Module Component	Model Number	Product Number	Module Shipping Wt. (Lbs)	Model MBU Brake Only	Model MDO Clutch Only	Model MDB Clutch-Brake	Model MIB Input Brake	Model MIDO Input Clutch	Model MIDO-WF Input Clutch w/Foot	Model MIDB Input Clutch-Brake	Model MIDB-WF Input Clutch-Brake w/Foot
Brake Unit	MBU1125	935200	38	935200	--	935200	935200	--	--	935200	935200
Drive Unit	MDU1125	935100	21	--	935100	935100	--	935100	935100	935100	935100
Input Unit	MIU1125	935000	12	--	--	--	935000	935000	935000	935000	935000
Output Unit	MOU1125	935300	35	--	935300	--	--	935300	935300	--	--
Foot		936900	4	--	--	--	--	--	936900	--	936900
Motor Adapter	MBU1125	937000	1	937000		--	937000	--	--	--	--

Options for 1125 Modular System:

Optional Component	Model Number	Product Number	Shipping Wt. (Lbs)	Comments
Motor Adapter	MBU-1125	937000	1	Use when MBU Model configuration is mounted on a C Face motor alone.
Drip Proof Guard	MDU-1125	935901	1.5	Product Thermal Capacity reduced to .23 HP_t
Drip Proof Guard	MBU-1125	935902	1.5	Product Thermal Capacity reduced to .30 HP_t

1375 Modular System Components (1.375 inch bore/shaft):

To achieve the Modular Assemblies shown for the Typical Applications:

1. Find the applicable component Model designation in the table below;
2. Order one of each of the product numbers shown in the column.

Module Component	Model Number	Product Number	Module Shipping Wt. (Lbs)	Model MBU Brake Only	Model MDO Clutch Only	Model MDB Clutch-Brake	Model MIB Input Brake	Model MIDO Input Clutch	Model MIDO-WF Input Clutch w/Foot	Model MIDB Input Clutch-Brake	Model MIDB-WF Input Clutch-Brake w/Foot
Brake Unit	MBU1375	936200	45	936200	--	936200	936200	--	--	936200	936200
Drive Unit	MDU1375	936100	30	--	936100	936100	--	936100	936100	936100	936100
Input Unit	MIU1375	936000	13	--	--	--	936000	936000	936000	936000	936000
Output Unit	MOU1375	936300	35	--	936300	--	--	936300	936300	--	--
Foot		936900	4	--	--	--	--	--	936900	--	936900
Motor Adapter	MBU1125	937000	1	937000	--	--	937000	--	--	--	--

Options for 1375 Modular System:

Optional Component	Model Number	Product Number	Shipping Wt. (Lbs)	Comments
Motor Adapter	MBU-1375	937000	1	Use when MBU Model configuration is mounted on a C Face motor alone.
Drip Proof Guard	MDU-1375	935901	1.5	Product Thermal Capacity reduced to .23 HP_t
Drip Proof Guard	MBU-1375	935902	1.5	Product Thermal Capacity reduced to .30 HP_t

Torque Vs. Air Pressure

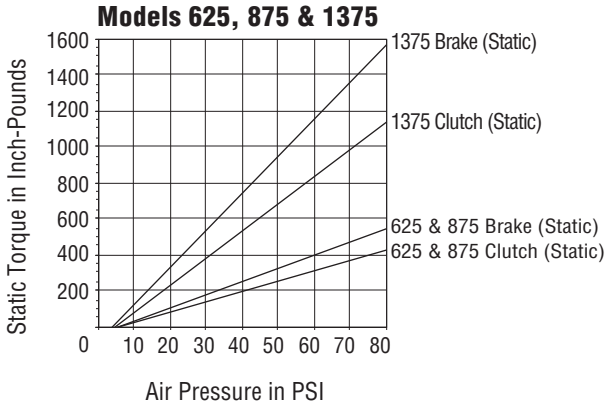

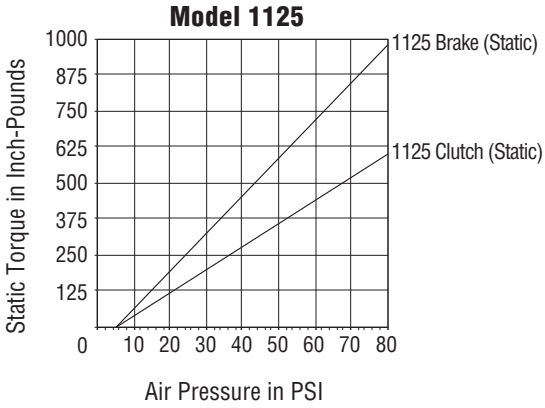

NOTE: Dynamic torque is approximately 85% of static torque.

MODULAR CLUTCH-BRAKES - APPROXIMATE DIMENSIONS (INCHES)

Model MIU

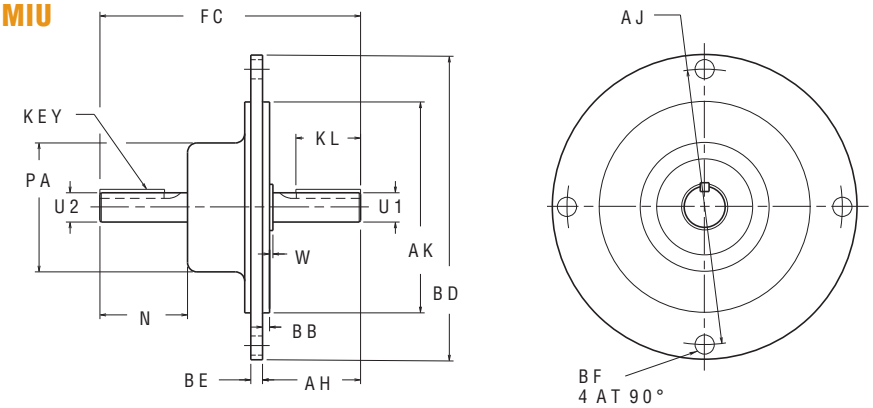

MODEL	PRODUCT NUMBER	AH	AJ	AK ±.001	BB	BD	BE	BF	FC	KEY (SQ)	KL	N	PA	U1 +.000 -.001	U2 +.000 -.001	W
625	929600	2.09	5.875	4.499	0.15	6.50	0.25	.410	5.56	0.188	1.38	1.87	2.75	0.625	0.875	0.07
875	928400	2.09	5.875	4.499	0.15	6.50	0.25	.410	5.56	0.188	1.38	1.87	2.75	0.875	0.875	0.06
1125	935000	2.66	7.250	--	--	8.500±.001	0.41	.530	7.50	0.250	1.62	2.62	3.75	1.125	1.125	0.03
1375	936000	3.15	7.250	--	--	8.500±.001	0.41	.530	8.50	0.250	2.25	3.13	3.75	1.375	1.375	0.03

Model MDU

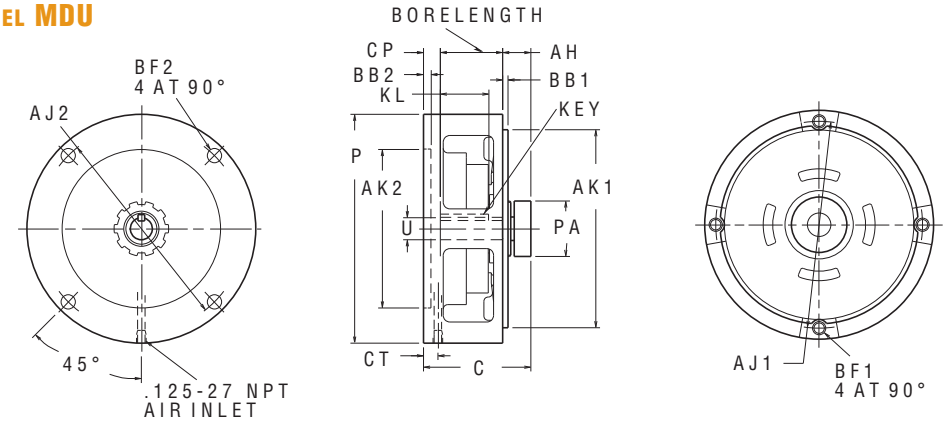

MODEL	PRODUCT NUMBER	AH	AJ1	AJ2	AK ±.001	AK ±.001	BB1	BB2	BF1	BF2	C	CP	CT	KEY (SQ)	KL	P	PA	U1 +.000 -.001	BORE LENGTH
625	928600	0.80	5.875	5.875	5.624	4.502	0.15	0.22	.375-16	0.406	3.05	0.48	0.41	0.188	1.38	6.50	1.58	0.625	1.75
875	928100	0.80	5.875	5.875	5.624	4.502	0.15	0.22	.375-16	0.406	3.05	0.48	0.41	0.188	1.38	6.50	1.58	0.875	1.75
1125	935100	0.82	9.000	7.250	8.499	8.502	0.25	0.21	.375-16	0.530	4.03	0.45	0.53	0.250	1.62	9.56	1.58	1.125	2.74
1375	936100	0.93	9.000	7.250	8.499	8.502	0.25	0.21	.375-16	0.530	4.14	0.39	0.53	0.312	2.25	9.56	2.68	1.375	3.75

MODULAR CLUTCH-BRAKES - APPROXIMATE DIMENSIONS (INCHES)

Model MBU

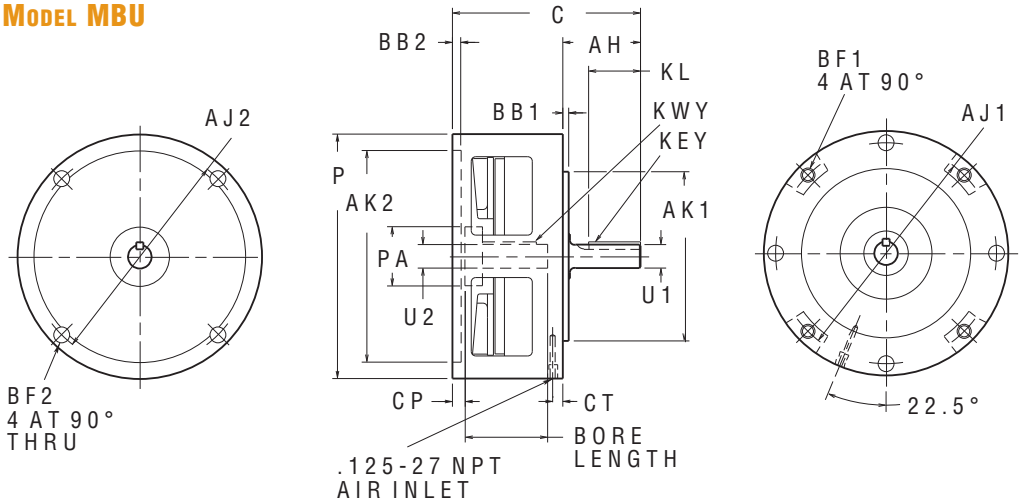

MODEL	PRODUCT NUMBER	AH	AJ1	AJ2	AK_1 ±.001	AK_2 ±.001	BB1	BB2	BF1	BF2	C	CP	CT	KEY (SQ)	KL	P	PA	U1 +.000 -.001	U2 +.001 -.000	BORE LENGTH
625	928500	2.06	5.875	5.875	4.499	5.627	0.16	0.22	.375-16	0.422	5.00	0.34	0.25	0.188	1.38	6.50	1.58	0.625	0.625	2.19
875	928000	2.13	5.875	5.875	4.499	5.627	0.16	0.22	.375-16	0.422	5.06	0.34	0.25	0.188	1.38	6.50	1.58	0.875	0.875	2.19
1125	935200	2.90	7.250	9.000	8.499	8.502	0.25	0.31	.500-13	0.422	7.02	0.36	0.62	0.250	1.62	9.56	1.58	1.125	1.125	2.50
1375	936200	3.34	7.250	9.000	8.499	8.502	0.25	0.31	.500-13	0.422	7.46	0.35	0.25	0.312	2.25	9.56	2.68	1.375	1.375	2.75

Model MOU

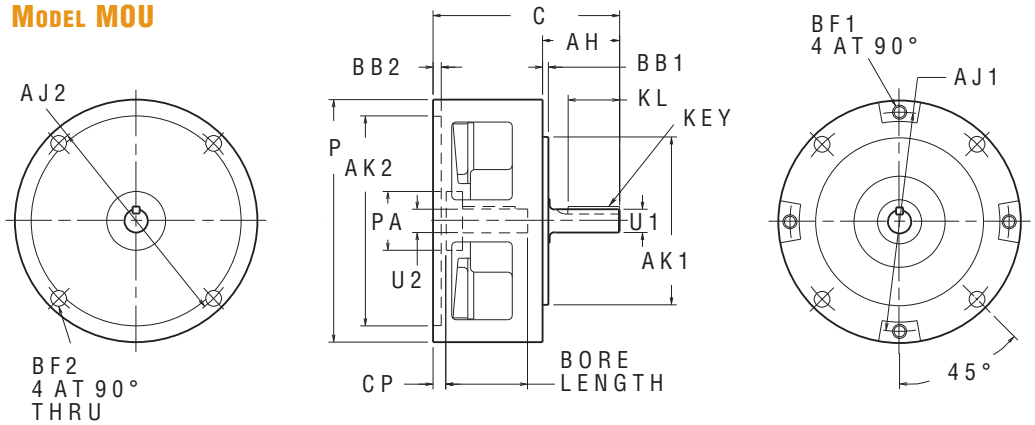

MODEL	PRODUCT NUMBER	AH	AJ1	AJ2	AK_1 ±.001	AK_2 ±.001	BB1	BB2	BF1	BF2	C	CP	KEY (SQ)	KL	P	PA	U1 +.000 -.001	U2 +.001 -.000	BORE LENGTH
625	928800	2.07	5.875	5.875	4.499	5.627	0.16	0.22	.375-16	0.422	5.00	0.34	0.188	1.38	6.50	1.58	0.625	0.625	2.19
875	928700	2.13	5.875	5.875	4.499	5.627	0.16	0.22	.375-16	0.422	5.06	0.34	0.188	1.38	6.50	1.58	0.875	0.875	2.19
1125	935300	2.90	7.250	9.000	8.499	8.502	0.25	0.31	.500-13	0.422	7.02	0.36	0.250	1.62	9.56	1.58	1.125	1.125	2.50
1375	936300	3.34	7.250	9.000	8.499	8.502	0.25	0.31	.500-13	0.422	7.46	0.35	0.312	2.25	9.56	2.68	1.375	1.375	2.75

MODULAR CLUTCH-BRAKES - APPROXIMATE DIMENSIONS (INCHES)

Model MDO

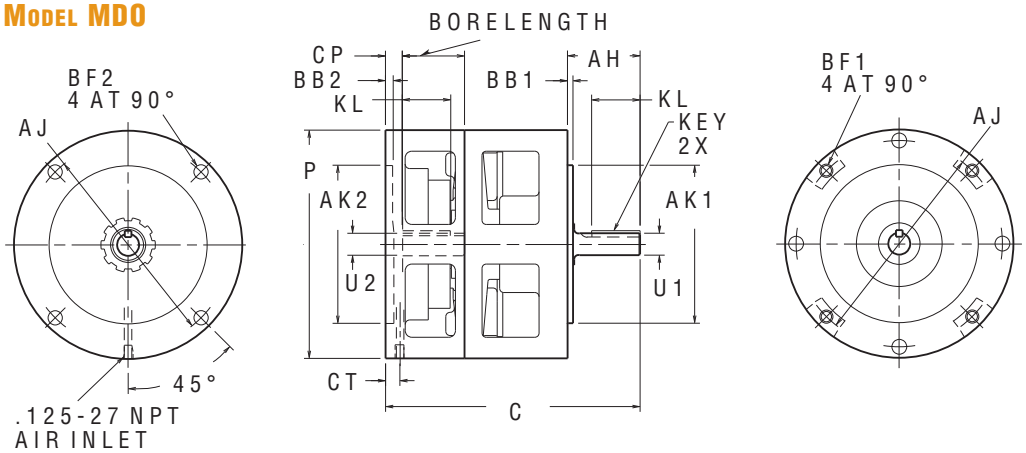

MODEL	PRODUCT NUMBER	AH	AJ1	AK1 ±.001	AK2 ±.001	BB1	BB2	BF1	BF2	C	CP	CT	KEY (SQ)	KL	P	U1 +.000 -.001	U2 +.001 -.000	BORE LENGTH
625	*see tables*	2.07	5.875	4.499	4.502	0.16	0.22	.375-16	0.406	7.25	0.43	0.41	0.188	1.38	6.50	0.625	0.625	1.75
875	*p. 250*	2.13	5.875	4.499	4.502	0.16	0.22	.375-16	0.406	7.31	0.43	0.41	0.188	1.38	6.50	0.875	0.875	1.75
1125	*and*	2.90	7.250	8.499	8.502	0.25	0.21	.500-13	0.530	10.24	0.45	0.53	0.250	1.62	9.56	1.125	1.125	2.74
1375	*p. 251*	3.34	7.250	8.499	8.502	0.25	0.21	.500-13	0.530	10.68	0.39	0.53	0.312	2.25	9.56	1.375	1.375	3.75

Model MDB

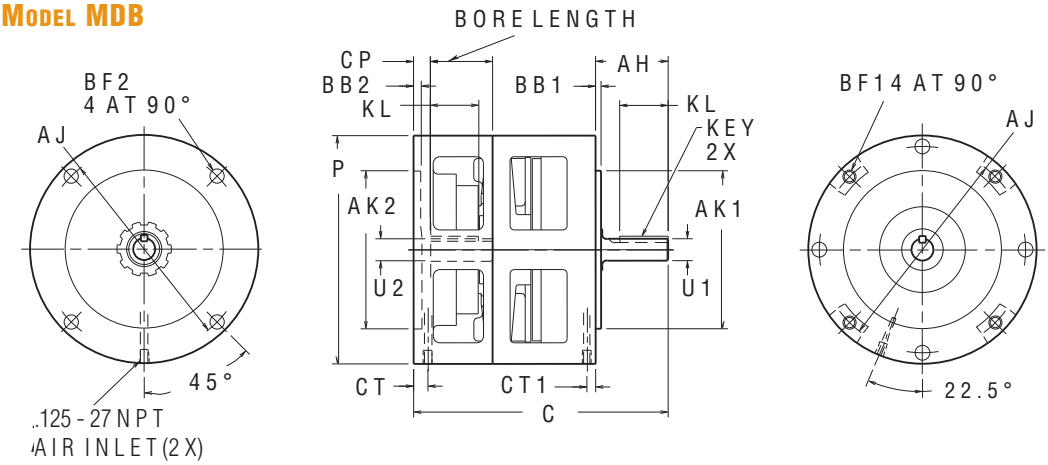

MODEL	PRODUCT NUMBER	AH	AJ1	AK1 ±.001	AK2 ±.001	BB1	BB2	BF1	BF2	C	CP	CT1	CT2	KEY (SQ)	KL	P	U1 +.000 -.001	U2 +.001 -.000	BORE LENGTH
625	*see tables*	2.06	5.875	4.499	4.502	0.16	0.22	.375-16	0.406	7.25	0.48	0.25	0.41	0.188	1.38	6.50	0.625	0.625	1.75
875	*p. 250*	2.13	5.875	4.499	4.502	0.16	0.22	.375-16	0.406	7.31	0.48	0.25	0.41	0.188	1.38	6.50	0.875	0.875	1.75
1125	*and*	2.90	7.250	8.499	8.502	0.25	0.21	.500-13	0.530	10.24	0.45	0.62	0.53	0.250	1.62	9.56	1.125	1.125	2.74
1375	*p. 251*	3.34	7.250	8.499	8.502	0.25	0.21	.500-13	0.530	10.68	0.39	0.25	0.53	0.312	2.25	9.56	1.375	1.375	3.75

MODULAR CLUTCH-BRAKES - APPROXIMATE DIMENSIONS (INCHES)

Model MIDO Input Clutch for Flange Mounting

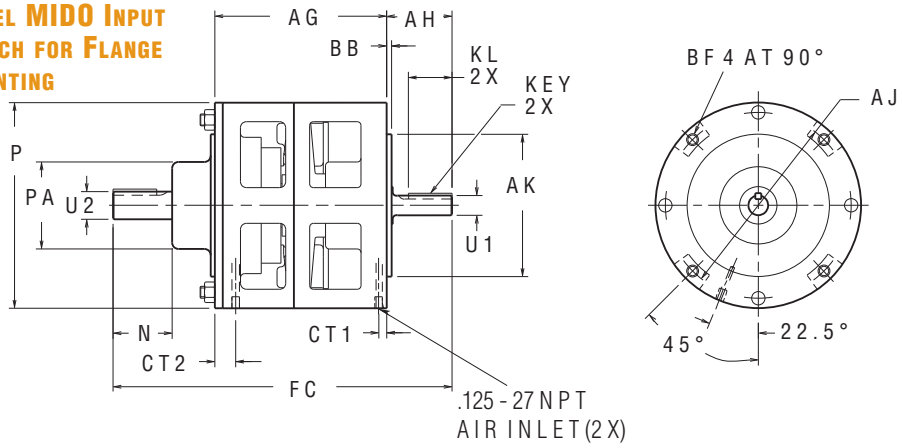

MODEL	PRODUCT NUMBER	AG	AH	AJ	AK	BB	BF	CT1	CT2	FC	KEY (SQ)	KL	N	P	PA	U1 +.000 -.001	U2 +.000 -.001
625	*see tables*	5.43	2.07	5.875	4.499	0.16	.375-16	0.25	0.66	10.72	0.188	1.38	1.87	6.50	2.75	0.625	0.875
875	*p. 250*	5.43	2.13	5.875	4.499	0.16	.375-16	0.25	0.66	10.78	0.188	1.38	1.87	6.50	2.75	0.875	0.875
1125	*and*	7.54	2.90	7.250	8.499	0.25	.500-13	0.62	0.73	14.87	0.250	1.62	2.62	9.56	3.75	1.125	1.125
1375	*p. 251*	7.54	3.34	7.250	8.499	0.25	.500-13	0.25	0.73	15.82	0.312	2.25	3.13	9.56	3.75	1.375	1.375

Model MIB Input Brake for Flange Mounting

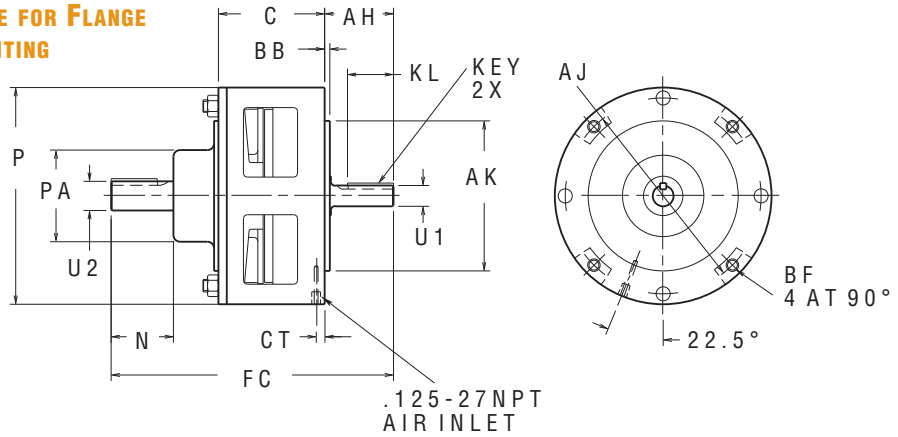

MODEL	PRODUCT NUMBER	AH	AJ	AK	BB	BF	C	CT	FC	KEY (SQ)	KL	N	P	PA	U1 +.000 -.001	U2 +.000 -.001
625	*see tables*	2.06	5.875	4.499	0.16	.375-16	3.18	0.25	8.47	0.188	1.38	1.87	6.50	2.75	0.625	0.875
875	*p. 250*	2.13	5.875	4.499	0.16	.375-16	3.18	0.25	8.53	0.188	1.38	1.87	6.50	2.75	0.875	0.875
1125	*and*	2.90	7.250	8.499	0.25	.500-13	4.90	0.62	12.23	0.250	1.62	2.62	9.56	3.75	1.125	1.125
1375	*p. 251*	3.34	7.250	8.499	0.25	.500-13	4.90	0.25	13.18	0.312	2.25	3.13	9.56	3.75	1.375	1.375

NOTE: Models 1125 and 1375 use Motor Adapter, Product Number 937000.

MODULAR CLUTCH-BRAKES - APPROXIMATE DIMENSIONS (INCHES)

Model MIDB Input Clutch-Brake for Flange Mounting

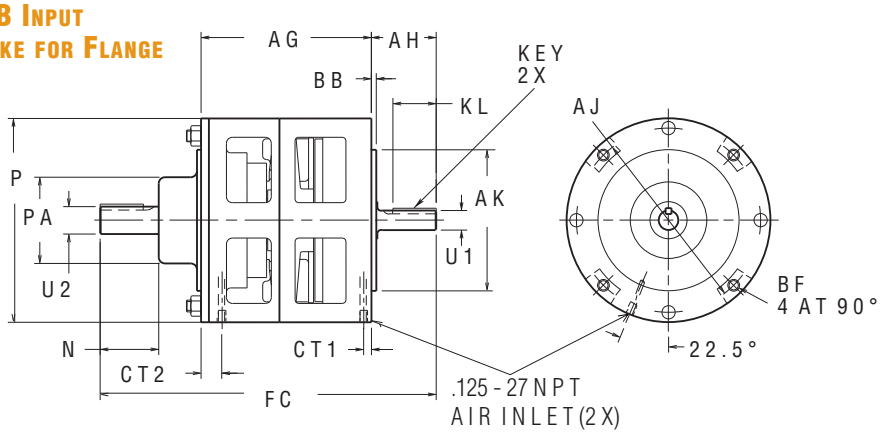

MODEL	PRODUCT NUMBER	AG	AH	AJ	AK$^{\pm.001}$	BB	BF	CT1	CT2	FC	KEY (SQ)	KL	N	P	PA	U1$^{+.000}_{-.001}$	U2$^{+.000}_{-.001}$
625	*see tables*	5.43	2.06	5.875	4.499	0.16	.375-16	0.25	0.66	10.72	0.188	1.38	1.87	6.50	2.75	0.625	0.875
875	*p. 250*	5.43	2.13	5.875	4.499	0.16	.375-16	0.25	0.66	10.78	0.188	1.38	1.87	6.50	2.75	0.875	0.875
1125	*and*	7.54	2.90	7.250	8.499	0.25	.500-13	0.62	0.73	14.87	0.250	1.62	2.62	9.56	3.75	1.125	1.125
1375	*p. 251*	7.54	3.34	7.250	8.499	0.25	.500-13	0.25	0.73	15.82	0.312	2.25	3.13	9.56	3.75	1.375	1.375

MIDO-WF Input Clutch Foot Mounted

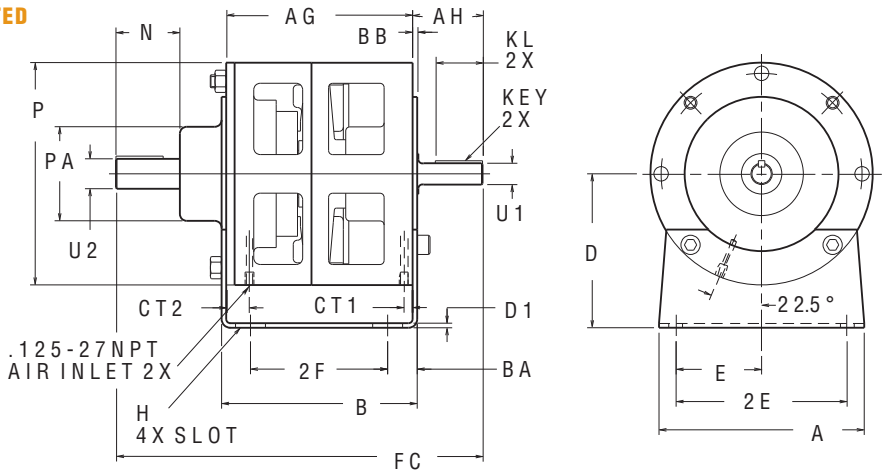

MODEL	PRODUCT NUMBER	A	AG	AH	B	BA	BB	CT1	CT2	D	D1	E	FC	H	KEY (SQ)	KL	N	P	PA	U1$^{+.000}_{-.001}$
625	*see tables*	6.00	5.43	2.07	5.74	0.87	0.16	0.25	0.66	4.50	0.13	2.50	10.72	.88 x.41	0.188	1.38	1.87	6.50	2.75	0.625
875	*p. 250*	6.00	5.43	2.13	5.74	0.87	0.16	0.25	0.66	4.50	0.13	2.50	10.78	.88 x.41	0.188	1.38	1.87	6.50	2.75	0.875
1125	*and*	9.00	7.54	2.90	8.02	1.01	0.25	0.62	0.73	5.25	0.12	3.88	14.87	1.00 x.56	0.250	1.62	2.62	9.56	3.75	1.125
1375	*p. 251*	9.00	7.54	3.34	8.02	1.01	0.25	0.25	0.73	5.25	0.12	3.88	15.82	1.00 x.56	0.312	2.25	3.13	9.56	3.75	1.375

MODEL	PRODUCT NUMBER	U2$^{+.000}_{-.001}$	2E	2F
625	*see tables*	0.875	5.00	4.00
875	*p. 250*	0.875	5.00	4.00
1125	*and*	1.125	7.75	6.00
1375	*p. 251*	1.375	7.75	6.00

MODULAR CLUTCH-BRAKES - APPROXIMATE DIMENSIONS (INCHES)

MIDB-WF Input Clutch-Brake Foot Mounted

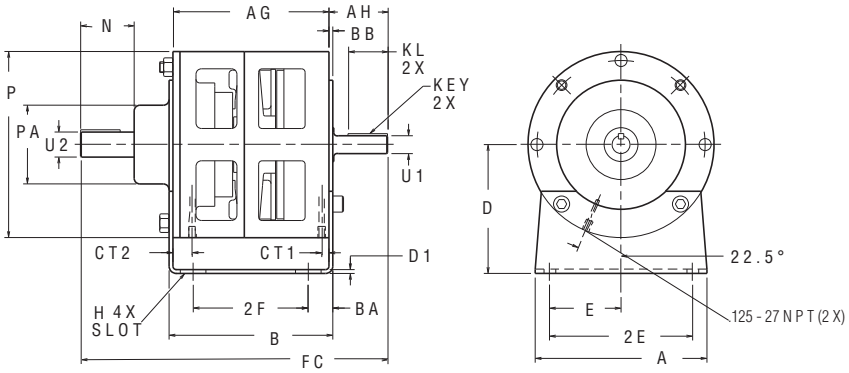

MODEL	PRODUCT NUMBER	A	AG	AH	B	BA	BB	CT1	CT2	D	D1	E	FC	H	KEY (SQ)	KL	N	P	PA	U1 +.000 -.001
625	*see tables*	6.00	5.43	2.06	5.74	0.87	0.16	0.25	0.66	4.50	0.13	2.50	10.72	.88 x .41	0.188	1.38	1.87	6.50	2.75	0.625
875	*p. 250*	6.00	5.43	2.13	5.74	0.87	0.16	0.25	0.66	4.50	0.13	2.50	10.78	.88 x .41	0.188	1.38	1.87	6.50	2.75	0.875
1125	*and*	9.00	7.54	2.90	8.02	1.01	0.25	0.62	0.73	5.25	0.12	3.88	14.87	1.00 x .56	0.252	1.62	2.62	9.56	3.75	1.125
1375	*p. 251*	9.00	7.54	3.34	8.02	1.01	0.25	0.25	0.73	5.25	0.12	3.88	15.82	1.00 x .56	0.312	2.25	3.13	9.56	3.75	1.375

MODEL	PRODUCT NUMBER	U2 +.000 -.001	2E	2F
625	*see tables*	0.875	5.00	4.00
875	*p. 250*	0.875	5.00	4.00
1125	*and*	1.125	7.75	6.00
1375	*p. 251*	1.375	7.75	6.00

MIDB/MIDO-W/L Foot Mounted

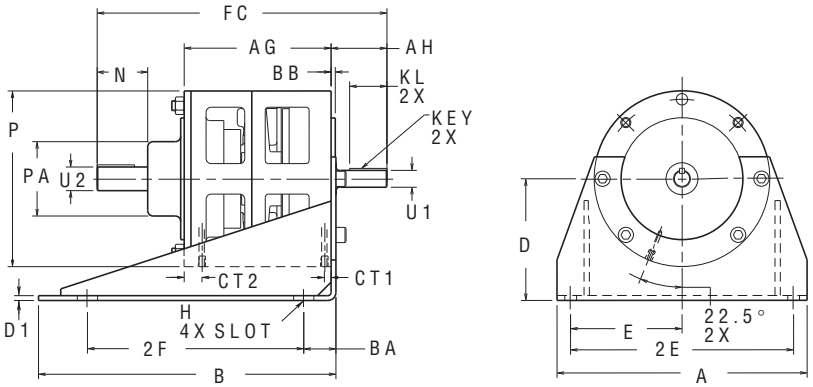

MODEL	PRODUCT NUMBER	A	AG	AH	B	BA	BB	CT1	CT2	D	D1	E	FC	H	KEY (SQ)	KL	N	P	PA	U1 +.000 -.001
625	*See tables*	9.25	5.43	2.07	11.00	1.19	0.16	0.25	0.66	4.50	0.18	4.12	10.72	0.75 x 0.50	0.188	1.38	1.87	6.50	2.75	0.625
875	*p. 250 & 251*	9.25	5.43	2.13	11.00	1.19	0.16	0.25	0.66	4.50	0.18	4.12	10.78	0.75 x 0.50	0.188	1.38	1.87	6.50	2.75	0.875

MODEL	PRODUCT NUMBER	U2 +.000 -.001	2E	2F
625	*See tables*	0.875	8.25	8.00
875	*p. 250 & 251*	0.875	8.25	8.00

Motor Adapter

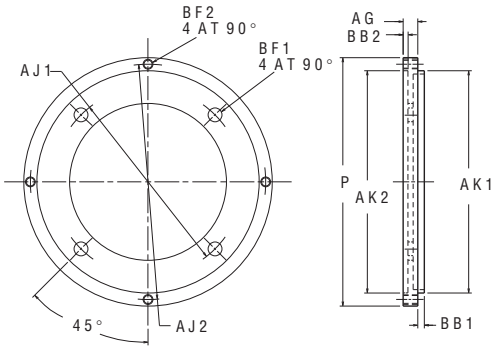

PRODUCT NUMBER	AG	AJ1	AJ2	AK1 ±.001	AK2 ±.001	BB1	BB2	BF1	BF2	P
937000	0.56	7.25	9.00	8.501	8.502	0.25	0.19	.531	.375-16	9.50

MODEL BCB-275 & FCB-450 CLUTCH-BRAKES

The BCB-275 and FCB-450 are combination clutch-brakes. The BCB-275 and FCB-450 provide:

- Static Torque capacity up to 40 Nm, 350 In. Lbs. @ 5,5 Bar, 80 psi
- Maximum Operating Speed up to 3600 rpm
- Thermal Capacity ratings up to 0,22 kW, 0.30 HP_t for both the clutch and the brake

THESE CLUTCH-BRAKES MUST BE MOUNTED ON THE DRIVEN SHAFT ONLY; Brake stops the hub Choose from **4 Models**:

- **Sheave Mount** unit comes with 1-"3V" Groove sheave
- **2 Pilot Mount** units offer **Standard bore sizes** of 0.500 and 0.625 inches
- For in-line applications, select the optional coupling half
- Better performance at lower cost
- Fewer parts and more torque
- Single piston engagement to eliminate clutch and brake overlap
- Torque capabilities to fit up to 2,2 kW, 3 HP drive motors
- Easy retrofitting of existing Nexen clutch-brakes; pilot dimensions are identical to the original Nexen clutch-brake series

Model BCB-275 Clutch-Brake

Clutch-Brake Style	Product Number	Sheave Diameter mmOD [in]OD	Bore mm [in]	Key Size Sq mm [in]	Clutch Torque Nm [in-lb]	Brake Torque Nm [in-lb]	Thermal Capacity kW [HP_T]	Inertia kg-m² [LB IN²]	Speed max rpm	Shipping Wt. kg [Lbs]
Pilot Mount	826050	--	15,9 [0.625]	4,77 [0.188]	9 [80]	9 [80]	0,10 [0.13]	0,70 [1.7]	3600	3 [5]
Pilot Mount	826051	--	12,7 [0.500]	3 [0.125]	9 [80]	9 [80]	0,10 [0.13]	0,70 [1.7]	3600	3 [5]
Sheave Mt., 1-"3V"	826000	69.8 [2.750]	15,9 [0.625]	4,77 [0.188]	9 [80]	9 [80]	0,10 [0.13]	0,70 [1.7]	3600	3 [5]
Sheave Mt., 1-"A", 3.00 PD	826021	--	15,9 [0.625]	4,77 [0.188]	9 [80]	9 [80]	0,10 [0.13]	0,70 [1.7]	3600	3 [5]

Keys are included.

Coupling Half Options BCB-275

A Coupling Half is used for in-line applications. To achieve a Pilot Mount with Coupling Half mounting configuration:

1. Select a Pilot Mount Clutch from above;
2. Select a Coupling Half from the chart below which fits your shaft requirements;
3. Order Clutch and Coupling Half separately.

Product Number	Bore Size mm [In]	Key Size Sq mm [in]	Shipping Wt. kg [Lbs]
826030	12,70 [0.500]	3.18 [0.125]	0,5 [1]
826031	15,88 [0.625]	4,78 [0.188]	0,5 [1]
826032	19,05 [0.750]	4,78 [0.188]	0,5 [1]

NOTE: Refer to pages 34 to 37 for coupling dimensions.

Model FCB-450 Clutch-Brake

Clutch-Brake Style	Product Number	Bore[2] mm [in]	Clutch Torque[3] Nm [in-lb]	Brake Torque[3] Nm [in-lb]	Thermal Capacity kW [HP_T]	Inertia kg-m² [in-lb]	Speed max rpm	Shipping Wt. kg [Lbs]
Through-Shaft	827150	22,2 [0.875]	40 [350]	40 [350]	0,22 [0.30]	0,28 [6.6]	3600	7 [15]

[2] Accepts same bore reduction bushings as F450, L-600 and M-800 bushings. [3] Torque measured at 80 psi.

Coupling Half Options FCB-450

A Coupling Half is used for in-line applications. Before spcifying it is important to review the maximum misalignment allowable. For FCB models, choose one of the couplings listed below.

Model	Maximum Misalignment mm [in]			Product Number	Max Bore mm [In]	Shipping Wt. kg [Lbs]	Taper Lock Bushing[1]
	Parallel	Angular	Axial				
FCB-450	0,38 [0.015]	1,02 [0.040]	3,18 [0.125]	802700	25,4 [1.000]	1,4 [3]	#1008

[1] Use Dodge Taper Lock® bushings. NOTE: Refer to pages 34 to 37 for coupling dimensions.

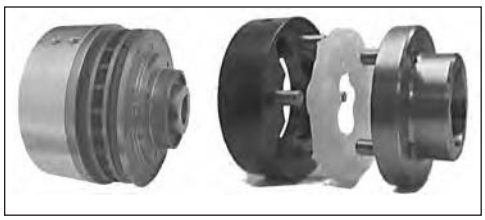

Clutch-brake with coupling option

BCB-275 MODEL CLUTCH-BRAKES - APPROXIMATE DIMENSIONS (INCHES)

Pilot Mount

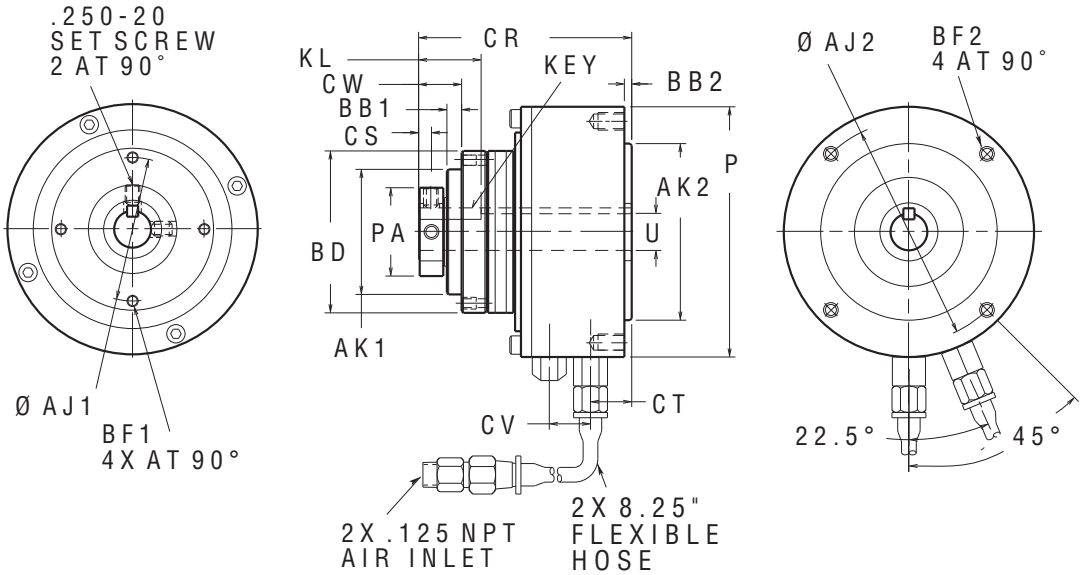

PRODUCT NUMBER	AJ1	AJ2	AK1±.001	AK2±.001	BB1	BB2	BD	BF1	BF2	CR	CS	CT	CV	CW	KL	KEY (SQ)	P	PA	U +.001 -.000
826050	2.437	3.750	2.124	2.999	0.25	0.12	2.75	0.190-32	.250-20	3.62	0.22	0.70	0.70	0.73	1.06	0.188	4.25	1.50	0.625
826051	2.437	3.750	2.124	2.999	0.25	0.12	2.75	0.190-32	.250-20	3.62	0.22	0.70	0.70	0.73	1.38	0.125	4.25	1.50	0.500

Sheave Mount

PRODUCT NUMBER	SHEAVE BELT	SHEAVE GROOVE	CX	CY	OD
826000	"3V"	1	0.82	0.48	2.75

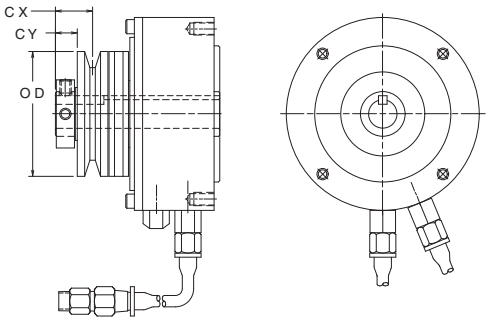

FCB-450 MODEL CLUTCH-BRAKES - APPROXIMATE DIMENSIONS (INCHES)

Through Shaft

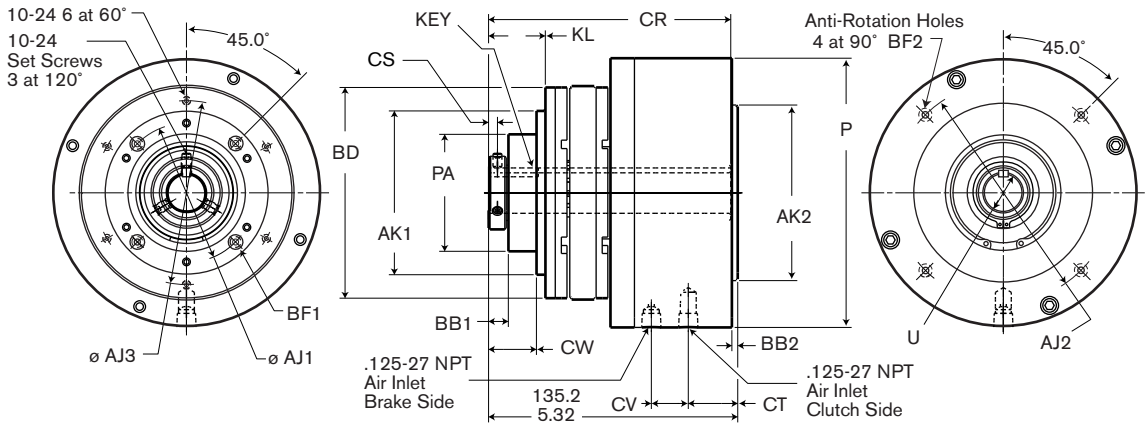

mm
[in]

PRODUCT NUMBER	AJ1	AJ2	AJ3	AK1 ±0,03 [±.001]	AK2 ±0,03 [±.001]	BB1	BB2	BD	BF1	BF2	CR	CS	CT	CV	CW	KL	KEY (SQ)	P	PA ±0,03 [±.001]	U ±0,03 [±.001]
827150	76,20 [3]	120,65 [4.750]	101,60 [4]	88,85 [3.498]	95,25 [3.750]	10,7 [.42]	3,18 [.125]	114,30 [4.500]	.250-20	.312-18	131,4 [5.17]	4,8 [.19]	26,8 [1.06]	20,0 [.79]	26,0 [1.02]	30,8 [1.21]	4,78 x 26,9 [.188 x 1.062]	146,0 [5.75]	63,45 [2.498]	22,22 [.875]

LSCB-44HT & 54HT STRAIGHT BORE CONVEYOR BRAKES

Nexen's air-engaged, straight-bore series of conveyor Clutch-Brakes offer high torque in a small package. The LSCB line is ideal for soft starts on accumulating, chain-driven live-roller, or in-line conveyor applications. With a maximum Cluch torque rating of 316 Nm [2800 in-lb] and a bore range from 12 to 38 mm [0.500-1.500 in], these products can outperform the competition at a lower cost. Nexen's conveyor lines comes standard with a pilot designed for easy sprocket mounting or can be configured for a variety of mounting applications (double-single sprocket, timing belt sprocket, v-belt sheave, plate, etc.).

- High torque: 316 Nm [2800 in-lb] at 5.5 bar [80 psi]
- Bore range: 12-38 mm [0.500-1.500 in]
- Through-shaft design with three set screws for easy mounting
- Variable mounting configurations: plate or double-single sprocket, timing belt sprocket, plate, or sheave
- Open design, improved airflow, high thermal horsepower
- Internal spline drive for trouble free disengagement performance
- Shielded ball bearings for low disengagement drag

  -sealed bearings also available
- No rotary air union required
- Compact size
- Spring biased for complete disengagement
- Field repairable o-rings, facings and springs

LSCB- 44HT & 54HT Straight Bore Conveyor Clutch-Brake Specifications

Model	Torque Nm [in-lb] Clutch	Torque Nm [in-lb] Brake	Product Number	Bore mm [in]	Mounting Style	Sprocket Style	Sprocket Pitch	Sprocket Teeth
LSCB-32HT	62 [550]	7 [50]	923520	22,2 [0.875]	Pilot	--	--	--
LSCB-44HT	178 [1575]	18 [160]	923571	28,6 [1.125]	Pilot	--	--	--
			923608	32,0 [1.260]		--	--	--
			923609	30,2 [1.118]		--	--	--
			923579	25,4 [1.000]	Sprocket	Double/Single	60	18
			923584	25,4 [1.000]		Double/Single	80	14
			923589	25,4 [1.000]		Double/Single	60	20
			923597	25,4 [1.000]		Double/Single	50	20
			923623	30,2 [1.188]		Double/Single	60	19
LSCB-54HT	316 [2800]	42 [375]	923591	38,1 [1.500]	Pilot	--	--	--

Single - Type 'A' Sprocket Sizes

Sprocket Mounting Sizes Using Standard Single Strand Roller Chain

Model	Pilot Diameter	Mounting Style	Sprocket Pitch / Minimum Number of Teeth				
			35	40-41	50	60	80
LSCB-44HT	76,2 mm [3.000 in]	Pilot Mount	**	31	25	22	**
		Intregral Sprocket	**	20	17	14	**
LSCB-54HT	101,6 mm [4.000 in]	Pilot Mount	**	**	32	22	21
		Intregral Sprocket	**	**	24	21	23

Units can be configured with plate or double-single sprocket, timing belt sprocket, or v-belt sheave. Nexen can also configure an optional integral brake, Please consult factory for details.
** Consult the Nexen Custom Business Unit at 800-843-7445 before using the starred chain sizes.

Maximum RPM

PSI	Size 32	Size 44	Size 54
80	300 RPM	250 RPM	250 RPM
70	400 RPM	300 RPM	300 RPM
60	550 RPM	350 RPM	350 RPM
50	800 RPM	450 RPM	450 RPM
40	1000 RPM	750 RPM	750 RPM

STRAIGHT-BORE CONVEYOR CLUTCH-BRAKE - APPROXIMATE DIMENSIONS METRIC [INCHES]

LSCB-44HT Double Sprocket

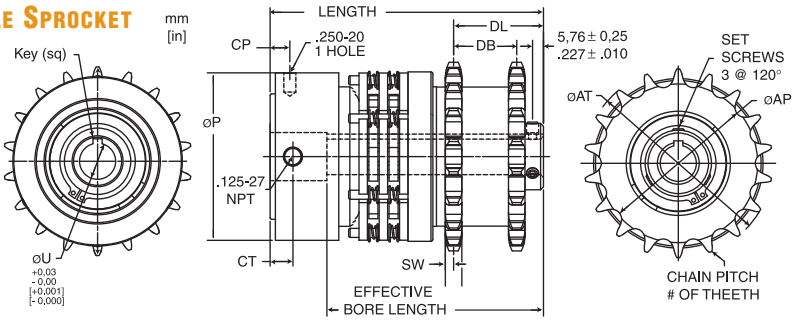

MODEL PRODUCT NO.	øAP	øAT	CP	CT	DB	DL	øP	SW	øU	Key	Length	Pitch	Teeth
LSCB-44HT 923579	97.79 [3.85]	119.46 [4.70]	16.2 [0.64]	22.7 [0.89]	37.59 [1.480]	52.0 [2.05]	115.8 [4.56]	5.93 [0.234]	25.40 [1.000]	6.35 [0.250]	179.07 [7.050]	#60	18
LSCB-44HT 923584	98.27 [3.869]	126.52 [4.981]	16.2 [0.64]	22.7 [0.89]	41.28 [1.625]	69.2 [2.72]	116.2 [4.58]	14.54 [0.572]	25.40 [1.000]	6.35 [0.250]	182.88 [7.200]	#80	14
LSCB-44HT 923589	109.86 [4.325]	131.71 [5.186]	16.2 [0.64]	22.7 [0.89]	37.59 [1.480]	52.0 [2.05]	115.8 [4.56]	5.93 [0.234]	25.40 [1.000]	6.35 [0.250]	179.07 [7.050]	#60	20
LSCB-44HT 923597	91.32 [3.595]	109.76 [4.321]	16.2 [0.64]	22.7 [0.89]	33.34 [1.312]	65.4 [2.57]	115.8 [4.56]	8.71 [0.343]	25.40 [1.000]	6.35 [0.250]	179.07 [7.050]	#50	20
LSCB-44HT 923623	103.84 [4.088]	125.60 [4.945]	16.2 [0.64]	22.7 [0.89]	37.69 [1.484]	65.7 [1.58]	115.8 [4.56]	11.66 [0.459]	30.175 [1.188]	6.35 [0.250]	179.07 [7.050]	#60	19

LSCB-HT Pilot Mounting

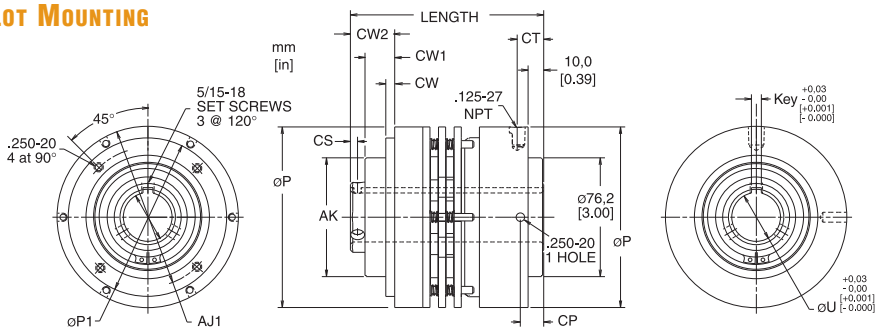

MODEL PRODUCT NO.	øAJ1	øAK	CP	CS	CT	CW	CW1	CW2	øP	øP1	øU	Key	Length
LSCB-32HT 923520	76.20 [3.000]	63.49 [2.500]	11.2 [0.44]	??? [???]	23.1 [0.91]	2.5 [0.10]	12.70 [0.500]	24.0 [0.94]	88.4 [3.48]	??? [???]	22.22 [0.875]	4.78 [0.188]	131.4 [5.180]
LSCB-44HT 923571	88.90 [3.500]	76.20 [3.000]	16.2 [0.64]	4.57 [0.180]	22.7 [0.89]	5.7 [0.22]	19.05 [0.750]	28.4 [1.12]	115.8 [4.56]	101.6 [4.00]	28.58 [1.125]	6.38 [0.251]	141.96 [5.589]
LSCB-44HT 923608	88.90 [3.500]	76.58 [3.015]	16.2 [0.64]	??? [???]	22.7 [0.89]	5.7 [0.22]	19.05 [0.750]	28.4 [1.12]	116.2 [4.58]	115.8 [4.56]	32.00 [1.260]	6.35 [0.250]	141.96 [5.589]
LSCB-44HT 923509	88.9 [3.500]	76.39 [3.007]	16.2 [0.64]	4.57 [0.180]	22.7 [0.89]	5.7 [0.22]	19.05 [0.750]	50.8 [2.00]	116.2 [4.58]	115.8 [4.56]	30.43 [1.198]	6.35 [0.250]	141.96 [5.589]
LSCB-54HT 923591	120.65 [4.750]	101.60 [4.000]	17.9 [0.71]	6.9 [0.27]	25.56 [0.967]	7.54 [0.30]	26.7 [1.05]	40.1 [1.58]	145.5 [5.73]	139.70 [5.500]	38.10 [1.500]	9.55 [0.376]	160.05 [6.301]

MODEL LCB-600 & MCB-800 CLUTCH-BRAKES

The LCB-600 and MCB-800 are combination clutch-brakes. The LCB-600 and MCB-800 provide:

- Static Torque capacity up to 124 NM, 1100 In. Lbs. @ 5,5 Bar, 80 psi
- Maximum Operating Speed up to 2000 rpm
- Thermal Capacity ratings up to 0,45 kW, 0.60 HP_t for both the clutch and the brake

THESE CLUTCH-BRAKES MUST BE MOUNTED ON THE DRIVEN SHAFT ONLY; Brake stops the hub Choose from **2 Models**:

- For in-line applications, select the optional coupling half
- Better performance at lower cost
- Fewer parts and more torque
- Single piston engagement to eliminate clutch and brake overlap
- Torque capabilities to fit up to 7,5 kW, 10 HP drive motors
- Laboratory proven thermal capacities for fast cycle rates and large load handling capability
- Involute splines for axial motion
- Drive flange accepts components for right angle or in-line drive applications
- Easy retrofitting of existing Nexen clutch-brakes; pilot dimensions are identical to the original Nexen clutch-brake series

Model LCB-600 and MCB-800 Clutch-Brake

Clutch-Brake Style	Product Number	Bore[2] mm [in]	Clutch Torque[3] Nm [in-lb]	Brake Torque[3] Nm [in-lb]	Thermal Capacity kW [HP_T]	Inertia kg-m² [LB IN²]	Speed max rpm	Shipping Wt. kg [Lbs]
LCB-600 Through-Shaft	828950	25,4 [1.000]	51 [450]	51 [450]	0,23 [0.31]	0,68 [16.2]	2000	9 [19]
MCB-800 Through-Shaft	830850	38,1 [1.500]	124 [1100]	124 [1100]	0,45 [0.60]	2,38 [56.4]	1800	17 [30]

[2] Accepts same bore reduction bushings as F450, L-600 and M-800 bushings. [3] Torque measured at 80 psi.

Coupling Half Options LCB-600 and MCB-800

A Coupling Half is used for in-line applications. Before spcifying it is important to review the maximum misalignment allowable. For FCB models, choose one of the couplings listed below.

Model	Maximum Misalignment mm [in]			Product Number	Max Bore mm [In]	Shipping Wt. kg [Lbs]	Taper Lock Bushing[1]
	Parallel	Angular	Axial				
LCB-600	0,38 [0.015]	1,63 [0.064]	3,18 [0.125]	804900	28,6 [1.125]	2,7 [6]	#1008
MCB-800	0,38 [0.015]	2,84 [0.112]	3,18 [0.125]	807400	63,5 [2.500]	10,4 [23]	#2517

[1] Use Dodge Taper Lock® bushings. NOTE: Refer to pages 34 to 37 for coupling dimensions.

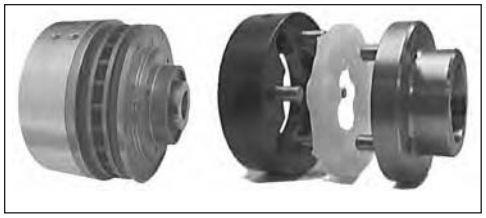

Clutch-brake with coupling option

LCB-600 MODEL CLUTCH-BRAKES - APPROXIMATE DIMENSIONS (INCHES)

Through Shaft

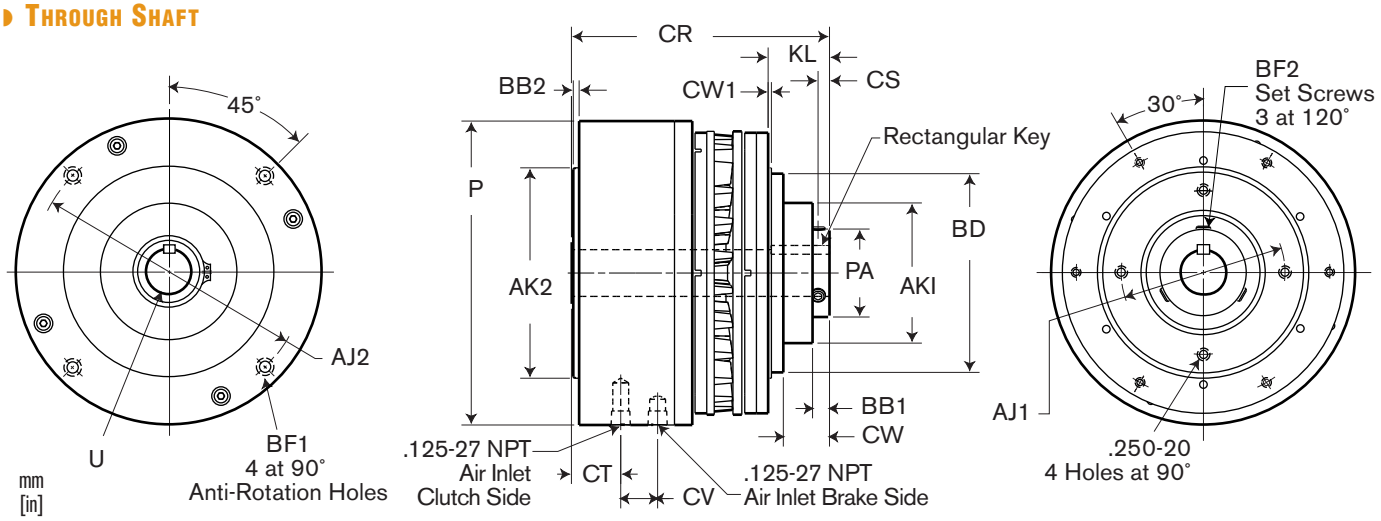

PRODUCT NUMBER	AJ1	AJ2	AK1 ±0,03 [±.001]	AK2 ±0,03 [±.001]	BB1	BB2	BD	BF1	BF2	CR	CS	CT	CV	CW	CW1	KL	KEY (RECTANGULAR)	P	PA ±0,03 [±.001]	U ±0,03 [±.001]
828950	88,89 [3.5]	149,23 [5.875]	76,15 [2.998]	114,30 [4.500]	9,2 [.36]	3,18 [.125]	107,9 [4.25]	.375-16 UNC-28	.312-18	140,2 [5.52]	6,22 [.245]	26,8 [1.05]	20,0 [.79]	25,1 [.99]	1,8 [.07]	33,3 [1.31]	4,78 x 6,35 x 31,75 [.188] [.250] [1.25]	165,1 [6.50]	47,8 [1.88]	25,40 [1.000]

MCB-800 MODEL CLUTCH-BRAKES - APPROXIMATE DIMENSIONS (INCHES)

Through Shaft

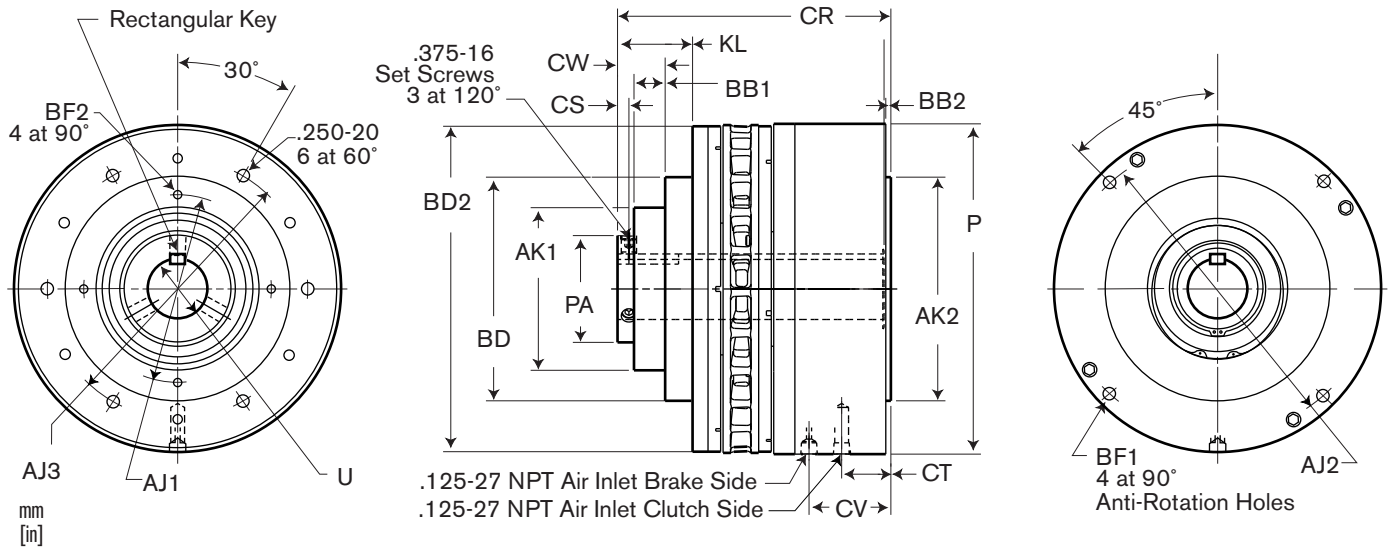

PRODUCT NUMBER	AJ1	AJ2	AJ3	AK1 ±0,03 [±.001]	AK2 ±0,03 [±.001]	BB1	BB2	BD	BD2	BF1	BF2	CR	CS	CT	CV	CW	KL	KEY (RECTANGULAR)	P ±0,03	PA ±0,03 [±.001]	U [±.001]
830850	120,65 [4.750]	190,50 [7.500]	165,10 [6.500]	101,55 [3.998]	139,65 [5.498]	19,46 [.766]	3,17 [.125]	139,65 [5.498]	203 [8.00]	.375-16	.312-18	170,7 [6.72]	7,1 [.28]	30,7 [1.21]	51,1 [2.01]	29,7 [1.17]	46,9 [1.84]	9,52 x 6,35 x 38,1 [.375] [.250] [1.50]	206,2 [8.12]	66,7 [2.62]	38,10 [1.500]

CLUTCH-BRAKE MODELS FWCB & LWCB

The FWCB and LWCB are each an "Air Champ" clutch and an "Air Champ" brake combined into a single unit, forming a combination clutch-brake. They provide:

- Static Torque capacity up to:
  FWCB/400 In. Lbs. @ 80 psi (brake)
  FWCB/100 In. Lbs. @ 80 psi (clutch)
  LWCB/400 In. Lbs. @ 80 psi (brake)
  LWCB/350 In. Lbs. @ 80 psi (clutch)
- Maximum Operating Speed up to 1800 rpm
- Thermal Horsepower ratings of:
  FWCB/0.25 (clutch) @ 1800 rpm
  FWCB/ 0.52 (brake) @ 1800 rpm
  LWCB/0.40 (clutch) @ 1800 rpm
  LWCB/ 0.52 (brake) @ 1800 rpm

THESE CLUTCH-BRAKES MUST BE MOUNTED ON THE DRIVEN SHAFT. Brake housing must not be mounted rigidly.

Choice of Models:
FWCB/5 Models, LWCB/7 Models

- **Sheave Mount** units are available:
  FWCB/1-"3V" or 1-"A" Groove sheave
  LWCB/2-"3V" or 2-"A" Groove sheave
- **Pilot Mount** units offer **Standard bore** sizes of:

  FWCB/0.750 and 0.875 inches
  LWCB/1.000 inches
- For in-line applications, select the optional coupling half

Model FWCB & LWCB Clutch-Brakes

Model	Clutch-Brake Style	Product Number	Sheave Diameter	Bore (In)	Key Size (SQ)	Shipping Wt. (Lbs)
FWCB	Pilot Mount	827100	--	0.875	0.188	14
FWCB	Pilot Mount	827111	--	0.750	0.188	14
FWCB	Sheave Mount 1-"3V"	826700	3.35 OD	0.875	0.188	15
FWCB	Sheave Mount, 1-"3V"	826800	4.50 OD	0.875	0.188	16
FWCB	Sheave Mount, 1-"A"	826900	3.80 PD	0.875	0.188	15
LWCB	Pilot Mount	828900	--	1.000	0.250 x .188	17
LWCB	Sheave Mount, 2-"3V"	828300	4.50 OD	1.000	0.250 x .188	18
LWCB	Sheave Mount, 2-"3V"	828400	5.30 OD	1.000	0.250 x .188	20
LWCB	Sheave Mount, 2-"3V"	828500	6.00 OD	1.000	0.250 x .188	20
LWCB	Sheave Mount, 2-"3V"	828600	8.00 OD	1.000	0.250 x .188	25
LWCB	Sheave Mount, 2-"A"	828700	4.40 PD	1.000	0.250 x .188	21
LWCB	Sheave Mount, 2-"A"	828800	5.40 PD	1.000	0.250 x .188	20

Keys are included.

Bushing Options
(for 0.875 & 1.000 bore clutch-brakes only)

Bushings fit into the clutch-brake, reducing the bore to the size indicated.

Bore Size	Product Number	Reduces Clutch Bore Size to (In)	Number Required	Shipping Wt.(Lbs)
0.875	827200	0.500	2	1
0.875	802500	0.625	2	1
0.875	802600	0.750	2	1
0.875	803100	No Bore/Customer machines	2	1
1.000	829000	0.625	2	2
1.000	829100	0.750	2	2
1.000	829200	0.875	2	2

Coupling Half Options,
see page 367 for coupling specifications

A Coupling Half is used for in-line applications. It is important to review the Maximum Misalignment allowable before specifying. To achieve a Pilot Mount with Coupling Half mounting configuration:

1. Select a Pilot Mount Clutch-Brake;
2. Order Clutch-Brake and Coupling Half separately.
3. Coupling Half is less taper lock bushing. Use Dodge Taper Lock® #1008/FWCB, #1215/LWCB, (0.500 to 1.000/FWCB, 0.500 to 1.125/LWCB, inch bore range). Customer furnished.

Model	Product Number	Maximum Bore Size (In)	Shipping Wt. (Lbs)
FWCB	802700	1.000	3
LWCB	804900	1.125	6

Torque Vs. Air Pressure

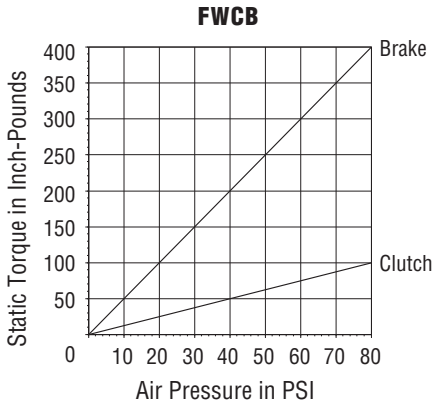

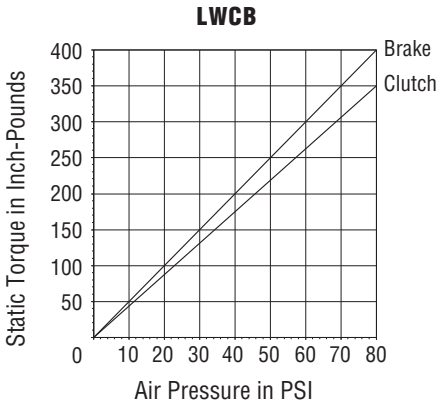

NOTE: Dynamic torque is approximately 85% of static torque.

FWCB & LWCB MODEL CLUTCH-BRAKES - APPROXIMATE DIMENSIONS (INCHES)

Pilot Mount

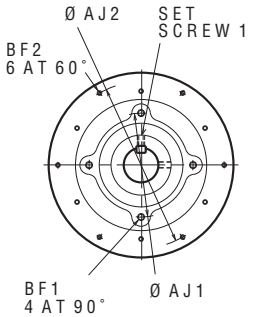

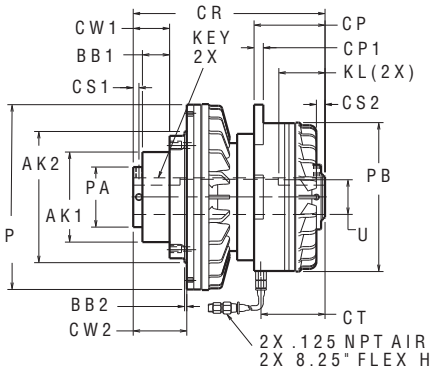

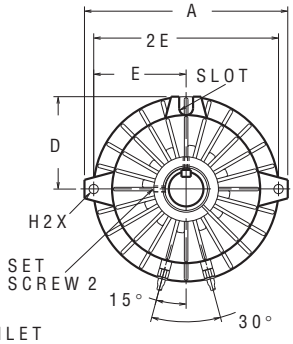

MODEL	PRODUCT NUMBER	A	AJ1	AJ2	AK1±.001	AK2±.001	BB1	BB2	BF1	BF2	CP	CP1	CR	CS1	CS2	CT	CW1	CW2	D	E
FWCB	827100	6.50	3.000	4.000	2.498	3.498	0.60	0.19	.250-20	.190-24	2.39	0.38	6.28	0.19	0.60	2.57	1.02	1.21	3.00	2.88
FWCB	827111	6.50	3.000	4.000	2.498	3.498	0.60	0.19	.250-20	.190-24	2.39	0.38	6.28	0.19	0.60	2.57	1.02	1.21	3.00	2.88
LWCB	828900	6.50	3.500	5.500	2.998	4.498	0.62	0.07	.250-20	.190-24	2.26	0.38	6.19	0.19	0.53	2.33	0.88	1.20	3.00	2.88

MODEL	PRODUCT NUMBER	2E	H	KEY	KL	P	PA	PB	SLOT	SET SCREW 1	SET SCREW 2	U +.001 -.000
FWCB	827100	5.76	.406	0.19 SQ	1.06	4.50	1.56	4.56	0.38 x 0.69	(3).190-24	(3) .164-32	.875
FWCB	827111	5.76	.406	0.19 SQ	1.06	4.50	1.56	4.56	0.38 x 0.69	(3) .190-24	(3) .164-32	.750
LWCB	828900	5.76	.406	0.18 x 0.250	1.25	6.00	1.88	4.56	0.38 X 0.69	(2).250-20	(3) .164-32	1.000

Pilot Mount w/Coupling Half

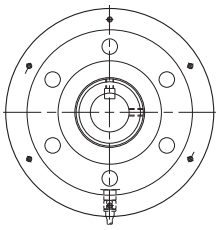

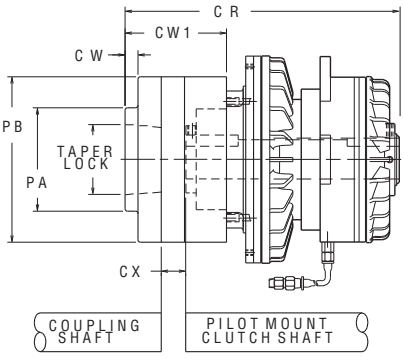

MODEL	PRODUCT NUMBER	CR	CW	CW1	CX	PA	PB	DODGE TAPER LOCK® BUSHING
FWCB	802700	8.01	0.12	2.75	0.70	2.62	3.50	#1008
LWCB	804900	8.68	0.94	3.37	0.64	2.62	4.38	#1215

Sheave Mount

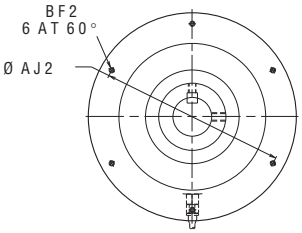

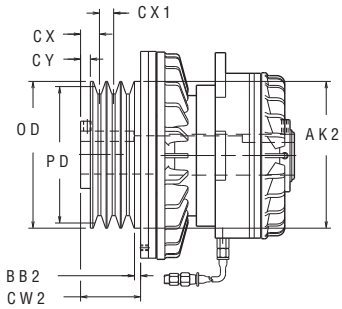

MODEL	PRODUCT NUMBER	SHEAVE BELT	SHEAVE GROOVE	OD	PD	AJ2	AK2±.001	BB2	BF2	CW2	CX	CX1	CY
FWCB	826700	"3V"	1	3.35	--	4.000	3.498	0.06	.190-24	1.20	0.72	--	0.42
FWCB	826800	"3V"	1	4.50	--	--	--	--	--	--	0.85	--	0.41
FWCB	826900	"A"	1	--	3.80	--	--	--	--	--	0.85	--	0.41
LWCB	828300	"3V"	2	4.50	--	5.500	4.498	0.29	.190-24	1.20	0.33	0.41	0.08
LWCB	828400	"3V"	2	5.30	--	--	--	--	--	--	0.51	0.41	0.20
LWCB	828500	"3V"	2	6.00	--	--	--	--	--	--	0.51	0.41	0.20
LWCB	828600	"3V"	2	8.00	--	--	--	--	--	--	0.51	0.41	0.20
LWCB	828700	"A"	2	--	4.40	--	--	--	--	--	0.38	0.62	0.11*
LWCB	828800	"A"	2	--	5.40	--	--	--	--	--	0.38	0.62	0.11*

* Sheave Extends Beyond Hub

CLUTCH-BRAKE MODELS MWCB & HWCB

The MWCB and HWCB are each an "Air Champ" clutch and an "Air Champ" brake combined into a single unit, forming a combination clutch-brake. They provide:

- Static Torque capacity up to:
  MWCB/900 In. Lbs. @ 80 psi (brake)
  MWCB/600 In. Lbs. @ 80 psi (clutch)
  HWCB/2800 In. Lbs. @ 80 psi (brake)
  HWCB/2600 In. Lbs. @ 80 psi (clutch)
- Maximum Operating Speed up to 1800 rpm
- Thermal Horsepower ratings of:
  MWCB/0.75 (clutch) @ 1800 rpm
  MWCB/ 1.30 (brake) @ 1800 rpm
  HWCB/1.25 (clutch) @ 1800 rpm
  HWCB/ 2.23 (brake) @ 1800 rpm

THESE CLUTCH-BRAKES MUST BE MOUNTED ON THE DRIVEN SHAFT. Brake housing must not be mounted rigidly.

Choice of Models:
MWCB/3 Models, HWCB/3 Models

- **Sheave Mount** units are available:
  MWCB/3-"3V" or 2-"B" Groove sheave
  HWCB/3-"5V" or 3-"B" Groove sheave
- **Pilot Mount** units offer **Standard bore** sizes of:

  MWCB/1.437 and 1.500 inches
  HWCB/1.688 and 1.875 inches
- For in-line applications, select the optional coupling half

Model MWCB & HWCB Clutch-Brakes

Model	Clutch-Brake Style	Product Number	Sheave Diameter	Bore (In)	Key Size (SQ)	Shipping Wt. (Lbs)
MWCB	Pilot Mount	830811	--	1.437	0.375	36
MWCB	Pilot Mount	830800	--	1.500	0.375	36
MWCB	Sheave Mount, 3-"3V"	830300	5.30 OD	1.500	0.375	36
MWCB	Sheave Mount, 3-"3V"	830400	6.00 OD	1.500	0.375	38
MWCB	Sheave Mount, 3-"3V"	830500	10.00 OD	1.500	0.375	55
MWCB	Sheave Mount, 2-"B"	830600	5.80 PD	1.500	0.375	38
MWCB	Sheave Mount, 2-"B"	830700	6.80 PD	1.500	0.375	41
HWCB	Pilot Mount	832913	--	1.688	0.375	95
HWCB	Pilot Mount	832900	--	1.875	0.500	95
HWCB	Sheave Mount, 3-"5V"	832400	7.10 OD	1.875	0.500	102
HWCB	Sheave Mount, 3-"5V"	832500	8.00 OD	1.875	0.500	107
HWCB	Sheave Mount, 3-"5V"	832600	16.00 OD	1.875	0.500	142
HWCB	Sheave Mount, 3-"B"	832700	7.40 PD	1.875	0.500	107

Keys are included.

Bushing Options
(for 1.500 & 1.875 bore clutch-brakes only)

Bushings fit into the clutch-brake, reducing the bore to the size indicated.

Bore Size	Product Number	Reduces Clutch Bore Size to (In)	Number Required	Shipping Wt.(Lbs)
1.500	830900	1.125	2	4
1.500	831000	1.188	2	4
1.500	831100	1.250	2	4
1.500	831200	1.375	2	4
1.500	831300	1.438	2	4
1.875	833000	1.375	2	4
1.875	833100	1.438	2	4
1.875	833200	1.500	2	4
1.875	833300	1.625	2	4
1.875	833400	1.750	2	4

Coupling Half Options,
see page 367 for coupling specifications

A Coupling Half is used for in-line applications. It is important to review the Maximum Misalignment allowable before specifying. To achieve a Pilot Mount with Coupling Half mounting configuration:

1. Select a Pilot Mount Clutch-Brake;
2. Order Clutch-Brake and Coupling Half separately.
3. Coupling Half is less taper lock bushing. Use Dodge Taper Lock® #2517 for MWCB & HWCB, (1.000 to 2.500 inch bore range). Customer furnished.

Model	Product Number	Maximum Bore Size (In)	Shipping Wt. (Lbs)
MWCB	807400	2.500	23
HWCB	809700	2.500	33

Torque Vs. Air Pressure

MWCB

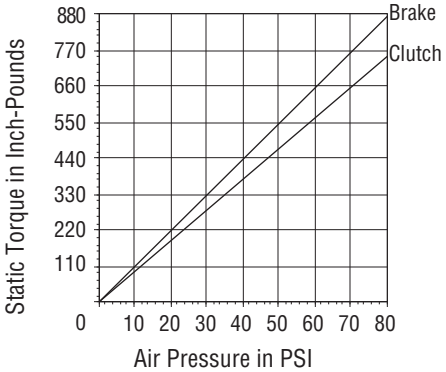

HWCB

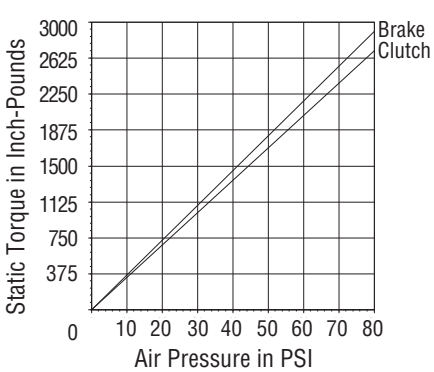

NOTE: Dynamic torque is approximately 85% of static torque.

MWCB & HWCB MODEL CLUTCH-BRAKES - APPROXIMATE DIMENSIONS (INCHES)

Pilot Mount

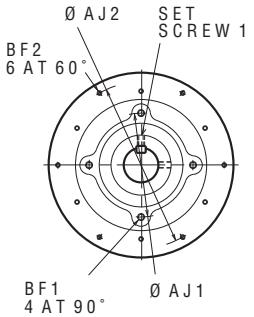

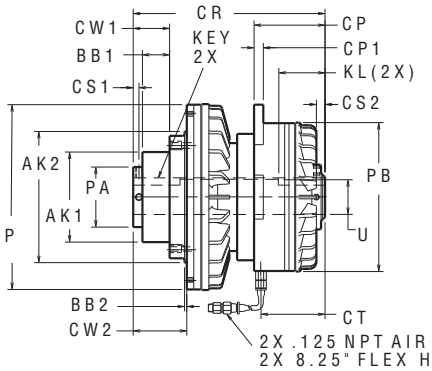

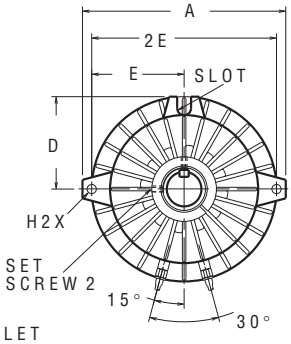

MODEL	PRODUCT NUMBER	A	AJ1	AJ2	AK1±.001	AK2±.001	BB1	BB2	BF1	BF2	CP	CP1	CR	CS1	CS2	CT	CW1	CW2	D	E
MWCB	830800	8.12	4.750	6.500	3.998	5.498	0.77	0.67	.312-18	.250-20	3.07	0.56	7.88	0.22	0.72	2.78	1.14	1.82	4.06	3.68
MWCB	830811	8.12	4.750	6.500	3.998	5.498	0.77	0.67	.312-18	.250-20	3.07	0.56	7.88	0.22	0.72	2.78	1.14	1.82	4.06	3.68
HWCB	832900	11.00	5.625	9.000	4.873	7.098	1.47	0.12	.375-16	.250-20	3.84	0.50	10.38	0.31	0.46	3.46	1.97	2.90	5.00	5.00
HWCB	832913	11.00	5.625	9.000	4.873	7.098	1.47	0.12	.375-16	.250-20	3.84	0.50	10.38	0.31	0.46	3.46	1.97	2.90	5.00	5.00

MODEL	PRODUCT NUMBER	2E	H	KEY	KL	P	PA	PB	SLOT	SET SCREW 1	SET SCREW 2	U +.001 -.000
MWCB	830800	7.36	.406	0.31 x 0.38	1.50	8.00	2.62	6.06	0.63 X 1.00	(2).250-20	(3).250-20	1.500
MWCB	830811	7.36	.406	0.38 x 0.38	1.69	8.00	2.62	6.06	0.63 X 1.00	(2).250-20	(3).250-20	1.438
HWCB	832900	10.00	.500	0.38 x 0.50	2.00	10.00	3.25	8.06	0.75 x 1.00	(2).375-16	(2).312-18	1.875
HWCB	832913	10.00	.500	0.38 x 0.38	2.25	10.00	3.25	8.06	0.75 x 1.00	(2).375-16	(2).312-18	1.688

Pilot Mount w/Coupling Half

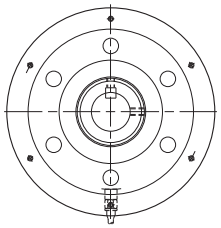

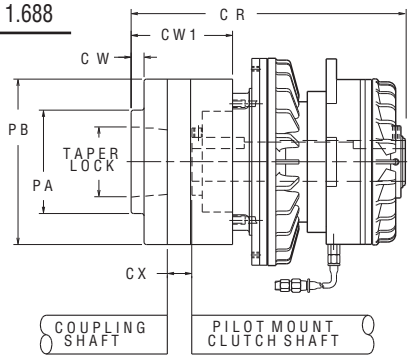

MODEL	PRODUCT NUMBER	CR	CW	CW1	CX	PA	PB	DODGE TAPER LOCK® BUSHING
MWCB	807400	10.99	0.81	4.25	0.87	5.00	7.00	#2517
HWCB	809700	13.32	0.63	4.90	1.18	5.00	8.00	#2517

Sheave Mount

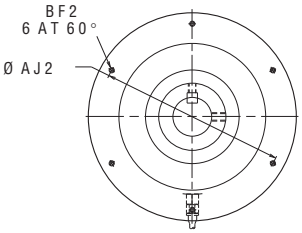

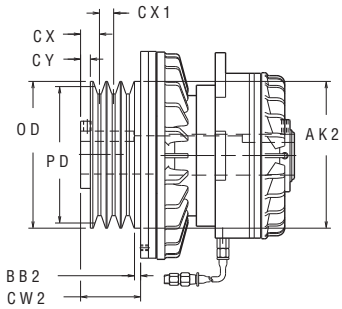

MODEL	PRODUCT NUMBER	SHEAVE BELT	SHEAVE GROOVE	OD	PD	AJ2	AK2±.001	BB2	BF2	CW2	CX	CX1	CY
MWCB	830300	"3V"	3	5.30	--	6.50	5.498	0.06	.250-20	1.80	0.46	.041	0.18
MWCB	830400	"3V"	3	6.00	--	--	--	--	--	--	0.46	0.41	0.18
MWCB	830500	"3V"	3	10.60	--	--	--	--	--	--	0.52	0.41	0.18
MWCB	830600	"B"	2	--	5.80	--	--	--	--	--	0.68	0.75	0.18
MWCB	830700	"B"	2	--	6.80	--	--	--	--	--	0.68	0.75	0.18
HWCB	832400	"5V"	3	7.10	--	9.000	7.098	0.32	.250-20	2.90	0.90	0.69	0.46
HWCB	832500	"5V"	3	8.00	--	--	--	--	--	--	1.03	0.69	0.50
HWCB	832600	"5V"	3	16.00	--	--	--	--	--	--	1.00	0.69	0.50
HWCB	832700	"B"	3	--	7.40	--	--	--	--	--	1.02	0.69	0.50

* Sheave Extends Beyond Hub

MODEL FCDB CLUTCH-DISC CALIPER BRAKES

Easily combine an F-450 "Air Champ" clutch with a DB Model Caliper Disc brake to create a clutch-disc caliper brake. THIS COMBINATION MOUNTS ON THE DRIVING SHAFT.

Clutch features:

- Static Torque capacity up to 140 In. Lbs. @ 80 psi
- Maximum Operating Speed up to 3600 rpm
- Thermal Horsepower rating of 0.30 @ 3600 rpm
- Heat Sink capacity of 30,000 Ft. Lbs.
- Choose from either **Pilot Mount** or **Sheave Mount** styles with **Standard Bore sizes** of 0.750 and 0.875

Caliper Brake features:

- Static Torque capacity up to 600 In. Lbs. @ 80 psi
- Additional Calipers may be added to increase the brake torque
- Arc contoured shoe provides large facing area, for greater facing life and stability
- Mounts easily in any position with T-Bracket
- Available with 10 inch disc
- Disc Speed up to 3600 rpm
- Spring return eliminates disc drag when disengaged

All components must be ordered separately.

MODEL FCDB CLUTCH-DISC-CALIPER BRAKES

1. Determine the Clutch style desired;
2. Order Clutch, Brake, Brake Hose and Disc separately to complete your assembly;
3. Additional Calipers can be added to increase brake torque .

Clutch Style	Product Number	Sheave Diameter	Bore (In)	Key Size (SQ)	Shipping Wt. (Lbs)
Clutch, Pilot Mount	802855	--	0.750	0.188	10
Clutch, Pilot Mount	802850	--	0.875	0.188	12
Clutch, Sheave Mount 1-"3V"	802810	3.35 OD	0.875	0.188	10
Clutch, Pilot w/Coupling Half	*Select a Pilot Mount and a Coupling Half to achieve this style of mount.*				
Caliper Brake w/T Bracket	835000				8
Brake Air Hose Assembly	835400				2
Disc, 10" OD	855900				3

Keys are included.

BUSHING OPTIONS (FOR 0.875 BORE CLUTCHES ONLY)

Bushings fit within the bore of the existing clutch, reducing the bore to the amount indicated.

Product Number	Reduces Clutch Bore Size to (In)	Shipping Wt. (Lbs)
827200	0.500	1
802500	0.625	1
802600	0.750	1
803100	No Bore/Customer machines	1

COUPLING HALF OPTIONS, SEE PAGE 367 FOR COUPLING SPECIFICATIONS

A Coupling Half is used for in-line applications. It is important to review the Maximum Misalignment allowable before specifying. To achieve a Pilot Mount with Coupling Half mounting configuration:

1. Select a Pilot Mount Clutch-Brake from above;
2. Order Clutch, Brake and Coupling Half separately.
3. Coupling Half is less taper lock bushing. Use Dodge Taper Lock® #1008 (0.500 to 1.000 inch bore range). Customer furnished.

Product Number	Maximum Bore Size (In)	Shipping Wt. (Lbs)
802700	1.000	3

TORQUE VS. AIR PRESSURE

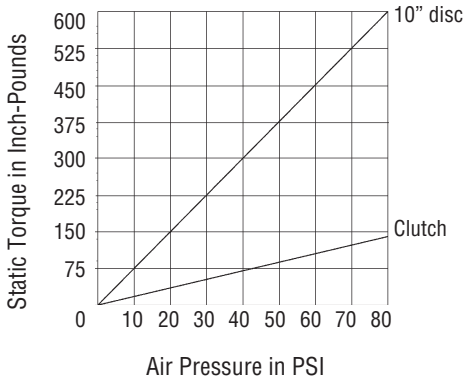

NOTE: Dynamic torque is approximately 85% of static torque.

FCDB MODEL CLUTCH-DISC CALIPER BRAKES - APPROXIMATE DIMENSIONS (INCHES)

Pilot Mount

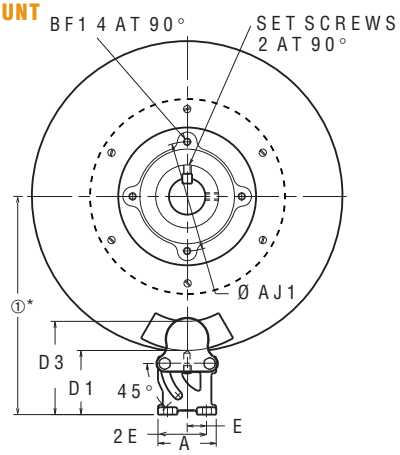

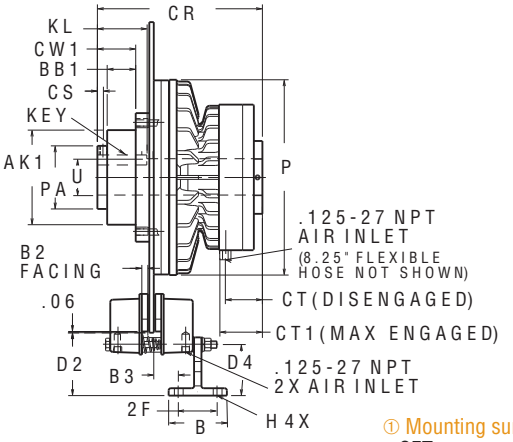

① Mounting surface to disc center = Disc Radius + D2

PRODUCT NUMBER	AJ1	AK1 ±.001	BB1	BF1	CR	CS	CT	CT1	CW1	KL	KEY (SQ)	P	PA	SET SCREWS	U +.001 -.000
802850	3.000	2.498	0.60	.250-20	4.75	0.25	1.33	1.42	1.04	0.62	0.188	4.56	1.38	.250-20	0.875
802855	3.000	2.498	0.60	.250-20	4.75	0.25	1.33	1.42	1.04	0.62	0.188	4.56	1.38	.250-20	0.750

PRODUCT NUMBER	OD (IN.)	A	B	B3	D1	D2	D3	D4	E	2E	2F
855900	10	3.00	3.00	1.27	3.30	3.24	4.80	2.62	1.00	2.00	2.00
835000	10	3.00	3.00	1.27	3.30	3.24	4.80	2.62	1.00	2.00	2.00

Pilot Mount w/Coupling Half

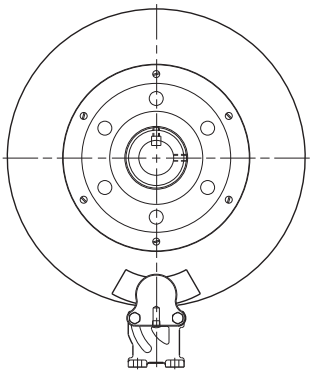

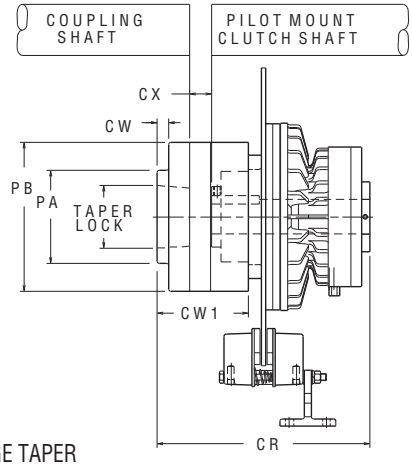

COUPLING PRODUCT NUMBER	CR	CW	CW1	CX	PA	PB	DODGE TAPER LOCK® BUSHING
802700	6.45	0.12	2.75	0.70	2.62	3.50	#1008

Sheave Mount

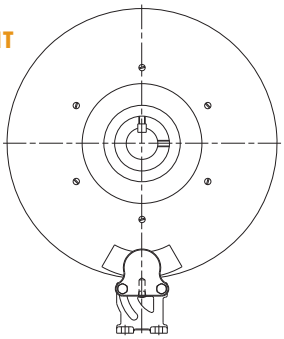

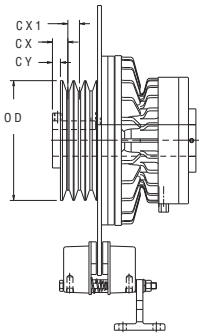

PRODUCT NUMBER	SHEAVE BELT	SHEAVE GROOVE	OD	CX	CX1	CY
802810	"3V"	1	3.35	0.75	--	0.44

MODEL LCDB CLUTCH-DISC CALIPER BRAKES

Easily combine an L-600 "Air Champ" clutch with a DB Model Caliper Disc brake to create a clutch-disc caliper brake. THIS COMBINATION MOUNTS ON THE DRIVING SHAFT.

Clutch features:

- Static Torque capacity up to 370 In. Lbs. @ 80 psi
- Maximum Operating Speed up to 3600 rpm
- Thermal Horsepower rating of 0.75 @ 3600 rpm
- Heat Sink capacity of 60,000 Ft. Lbs.
- Choose from either **Pilot Mount** or **Sheave Mount** styles with **standard bore** sizes of 1.000 and 1.125 inches

Caliper Brake features:

- Static Torque capacity up to 750 In. Lbs. @ 80 psi
- Additional calipers may be added to increase the brake torque
- Arc contoured shoe provides large facing area, for greater facing life and stability
- Mounts easily in any position with T-Bracket
- Available with 10 or 12 inch disc
- Disc Speed up to 3600 rpm
- Spring return eliminates disc drag when disengaged

All components must be ordered separately.

Model LCDB Clutch-Disc-Caliper Brakes

1. Determine the Clutch style desired;
2. Order Clutch, Brake, Brake Hose and Disc separately to complete your assembly;
3. Additional Calipers can be added to increase brake torque .

Clutch Style	Product Number	Sheave Diameter	Bore (In)	Key Size (SQ)	Shipping Wt. (Lbs)
Clutch, Pilot Mount	805275	--	1.000	0.025	17
Clutch, Pilot Mount	805270	--	1.125	0.025	17
Clutch, Sheave Mount , 2-"3V"	805210	4.50 OD	1.125	0.025	18
Clutch, Pilot w/Coupling Half	*Select a Pilot Mount and a Coupling Half to achieve this style of mount.*				
Caliper Brake w/T Bracket	835000				8
Brake Air Hose Assembly	835400				2
Disc, 10" OD	855500				3
Disc, 12" OD	856000				5

Keys are included.

Bushing Options (for 1.125 bore clutches only)

Bushings fit within the bore of the existing clutch, reducing the bore to the amount indicated.

Product Number	Reduces Clutch Bore Size to (In)	Shipping Wt. (Lbs)
805100	0.625	1
804600	0.750	1
804700	0.875	1
804800	1.000	1
805000	No Bore/Customer machines	1

Coupling Half Options, see page 367 for coupling specifications

A Coupling Half is used for in-line applications. It is important to review the Maximum Misalignment allowable before specifying. To achieve a Pilot Mount with Coupling Half mounting configuration:

1. Select a Pilot Mount Clutch-Brake from above;
2. Order Clutch-Brake and Coupling Half separately.
3. Coupling Half is less taper lock bushing. Use Dodge Taper Lock® #1215 (0.500 to 1.125 inch bore range). Customer furnished.

Product Number	Maximum Bore Size (In)	Shipping Wt. (Lbs)
804900	1.125	6

Torque Vs. Air Pressure

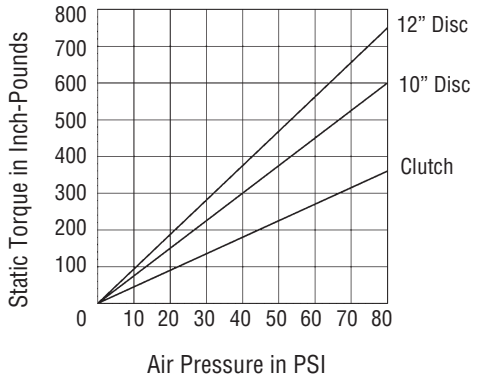

NOTE: Dynamic torque is approximately 85% of static torque.

LCDB MODEL CLUTCH-DISC CALIPER BRAKES - APPROXIMATE DIMENSIONS (INCHES)

Pilot Mount

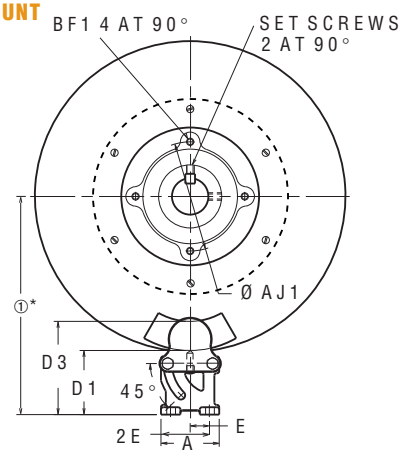

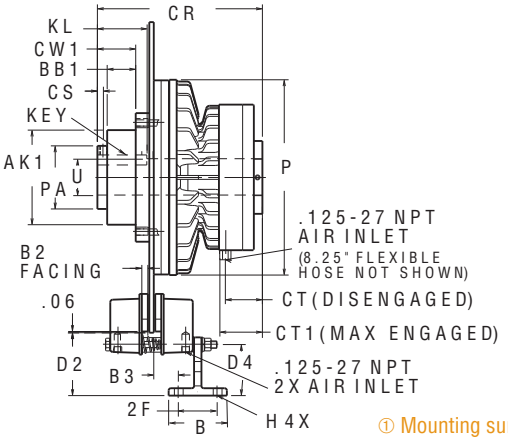

① Mounting surface to disc center = Disc Radius + D2

PRODUCT NUMBER	AJ1	AK1 ±.001	BB1	BF1	CR	CS	CT	CT1	CW1	KL	KEY (SQ)	P	PA	SET SCREWS	U +.001 -.000
805270	3.500	2.998	0.62	.250-20	5.56	0.25	1.79	1.94	1.23	1.37	0.250	6.06	1.84	.312-18	1.125
805275	3.500	2.998	0.62	.250-20	5.56	0.25	1.79	1.94	1.23	1.37	0.250	6.06	1.84	.312-18	1.000

PRODUCT NUMBER	OD (IN.)	A	B	B3	D1	D2	D3	D4	E	2E	2F
855500	10	3.00	3.00	1.27	3.30	3.24	4.80	2.62	1.00	2.00	2.00
835000	10	3.00	3.00	1.27	3.30	3.24	4.80	2.62	1.00	2.00	2.00

PRODUCT NUMBER	OD (IN.)	A	B	B3	D1	D2	D3	D4	E	2E	2F
856000	12	3.00	3.00	1.27	3.30	3.24	4.80	2.62	1.00	2.00	2.00
835000	10	3.00	3.00	1.27	3.30	3.24	4.80	2.62	1.00	2.00	2.00

Pilot Mount w/Coupling Half

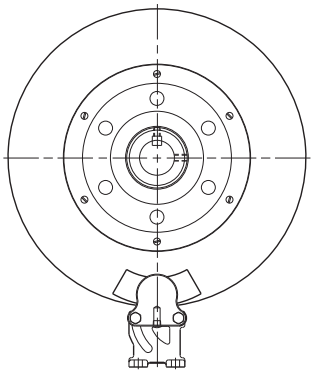

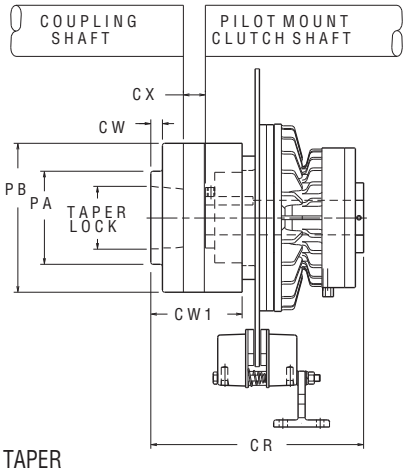

PRODUCT NUMBER	CR	CW	CW1	CX	PA	PB	DODGE TAPER LOCK® BUSHING
804900	7.70	0.94	3.37	0.64	2.62	4.38	#1215

Sheave Mount

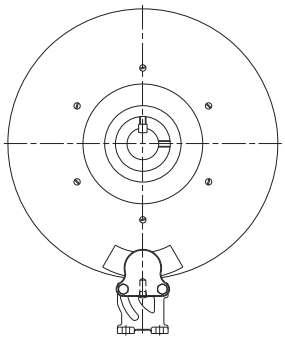

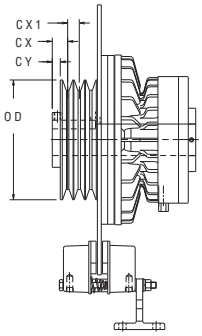

PRODUCT NUMBER	SHEAVE BELT	SHEAVE GROOVE	OD	CX	CX1	CY
805210	"3V"	2	4.50	0.68	0.41	0.43

MODEL MCDB CLUTCH-DISC CALIPER BRAKES

Easily combine an M-800 "Air Champ" clutch with a DB Model Caliper Disc brake to create a clutch-disc caliper brake. THIS COMBINATION MOUNTS ON THE DRIVING SHAFT.

Clutch features:

- Static Torque capacity up to 960 In. Lbs. @ 80 psi
- Maximum Operating Speed up to 1800 rpm
- Thermal Horsepower rating of 1.00 @ 1800 rpm
- Heat Sink capacity of 110,000 Ft. Lbs.
- Choose from either **Pilot Mount** or **Sheave Mount** styles with **standard bore** sizes of 1.438 and 1.625 inches

Caliper Brake features:

- Static Torque capacity up to 875 In. Lbs. @ 80 psi
- Additional calipers may be added to increase the brake torque
- Arc contoured shoe provides large facing area, for greater facing life and stability
- Mounts easily in any position with T-Bracket
- Available with 12 or 14 inch disc
- Disc Speed up to 1800 rpm
- Spring return eliminates disc drag when disengaged

All components must be ordered separately.

Model MCDB Clutch-Disc-Caliper Brakes

1. Determine the Clutch style desired;
2. Order Clutch, Brake, Brake Hose and Disc separately to complete your assembly;
3. Additional Calipers can be added to increase brake torque .

Clutch Style	Product Number	Sheave Diameter	Bore (In)	Key Size (SQ)	Shipping Wt. (Lbs)
Clutch, Pilot Mount	807655	--	1.438	0.375	38
Clutch, Pilot Mount	807650	--	1.625	0.375	37
Clutch, Sheave Mount , 3-"3V"	807610	5.30 OD	1.625	0.375	37
Clutch, Pilot w/Coupling Half	*Select a Pilot Mount and a Coupling Half to achieve this style of mount.*				
Caliper Brake w/T Bracket	835000				8
Brake Air Hose Assembly	835400				2
Disc, 12" OD	855600				5
Disc, 14" OD	855700				7

Keys are included.

Bushing Options (for 1.625 bore clutches only)

Bushings fit within the bore of the existing clutch, reducing the bore to the amount indicated.

Product Number	Reduces Clutch Bore Size to (In)	Shipping Wt. (Lbs)
806700	1.000	2
806800	1.125	2
806900	1.188	2
807000	1.250	2
807100	1.375	2
807200	1.438	2
807300	1.500	2
807500	No Bore/Customer machines	2

Coupling Half Options, see page 367 for coupling specifications

A Coupling Half is used for in-line applications. It is important to review the Maximum Misalignment allowable before specifying. To achieve a Pilot Mount with Coupling Half mounting configuration:

1. Select a Pilot Mount Clutch-Brake from above;
2. Order Clutch-Brake and Coupling Half separately.
3. Coupling Half is less taper lock bushing. Use Dodge Taper Lock® #2517 (1.000 to 2.500 inch bore range). Customer furnished.

Product Number	Maximum Bore Size (In)	Shipping Wt. (Lbs)
807400	2.500	25

Torque Vs. Air Pressure

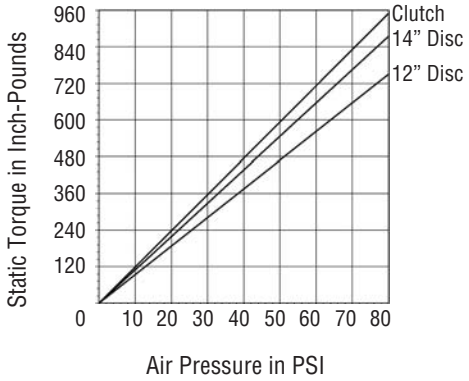

NOTE: Dynamic torque is approximately 85% of static torque.

MCDB MODEL CLUTCH-DISC CALIPER BRAKES - APPROXIMATE DIMENSIONS (INCHES)

Pilot Mount

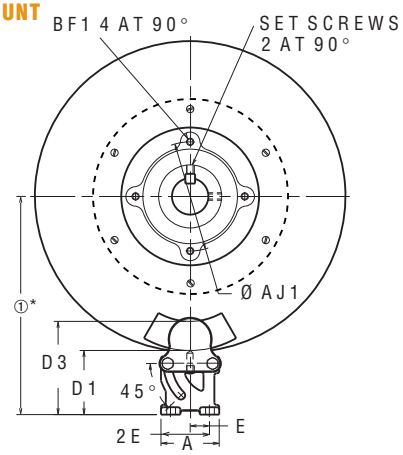

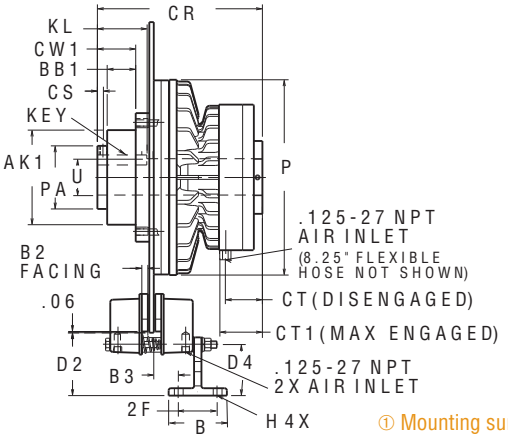

① Mounting surface to disc center = Disc Radius + D2

PRODUCT NUMBER	AJ1	AK1 ±.001	BB1	BF1	CR	CS	CT	CT1	CW1	KL	KEY (SQ)	P	PA	SET SCREWS	U +.001 -.000
807650	4.750	3.998	0.77	.312-18	7.31	0.38	1.62	1.71	1.62	1.69	0.375	8.06	2.63	.375-16	1.625
807655	4.750	3.998	0.77	.312-18	7.31	0.38	1.62	1.71	1.62	1.69	0.375	8.06	2.63	.375-16	1.438

PRODUCT NUMBER	OD (IN.)	A	B	B3	D1	D2	D3	D4	E	2E	2F
855600	12	3.00	3.00	1.27	3.30	3.24	4.80	2.62	1.00	2.00	2.00
835000	10	3.00	3.00	1.27	3.30	3.24	4.80	2.62	1.00	2.00	2.00

PRODUCT NUMBER	OD (IN.)	A	B	B3	D1	D2	D3	D4	E	2E	2F
855700	14	3.00	3.00	1.27	3.30	3.24	4.80	2.62	1.00	2.00	2.00
835000	10	3.00	3.00	1.27	3.30	3.24	4.80	2.62	1.00	2.00	2.00

Pilot Mount w/Coupling Half

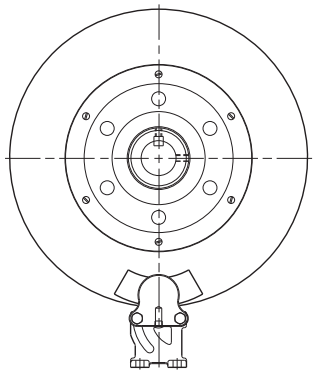

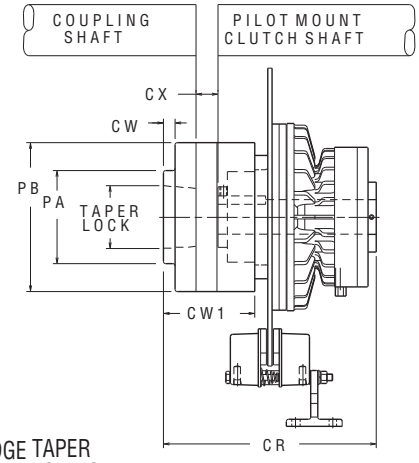

PRODUCT NUMBER	CR	CW	CW1	CX	PA	PB	DODGE TAPER LOCK® BUSHING
807400	9.93	0.81	4.25	0.87	5.00	7.00	#2517

Sheave Mount

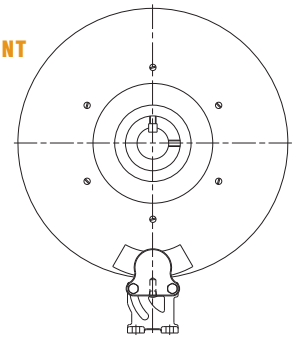

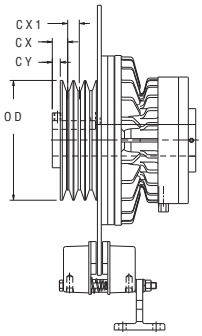

PRODUCT NUMBER	SHEAVE BELT	SHEAVE GROOVE	OD	CX	CX1	CY
807610	"3V"	3	5.30	0.96	0.41	0.68

MODEL HCDB CLUTCH-DISC CALIPER BRAKES

Easily combine an H-1000 "Air Champ" clutch with a DB Model Caliper Disc brake to create a clutch-disc caliper brake. THIS COMBINATION MOUNTS ON THE DRIVING SHAFT.

Clutch features:

- Static Torque capacity up to 2800 In. Lbs. @ 80 psi
- Maximum Operating Speed up to 1800 rpm
- Thermal Horsepower rating of 2.25 @ 1800 rpm
- Heat Sink capacity of 230,000 Ft. Lbs.
- Choose from either **Pilot Mount** or **Sheave Mount** styles with **standard bore** sizes of 1.688 and 1.875 inches

Caliper Brake features:

- Static Torque capacity up to 1025 In. Lbs. @ 80 psi
- Additional calipers may be added to increase the brake torque
- Arc contoured shoe provides large facing area, for greater facing life and stability
- Mounts easily in any position with T-Bracket
- Available with 16 inch disc
- Disc Speed up to 1800 rpm
- Spring return eliminates disc drag when disengaged

All components must be ordered separately.

Model HCDB Clutch-Disc-Caliper Brakes

1. Determine the Clutch style desired;
2. Order Clutch, Brake, Brake Hose and Disc separately to complete your assembly;
3. Additional Calipers can be added to increase brake torque .

Clutch Style	Product Number	Sheave Diameter	Bore (In)	Key Size (SQ)	Shipping Wt. (Lbs)
Clutch, Pilot Mount	810055	--	1.688	0.375	63
Clutch, Pilot Mount	810050	--	1.875	0.500	61
Clutch, Sheave Mount , 3-"5V"	810010	7.10 OD	1.875	0.500	69
Clutch, Pilot w/Coupling Half	*Select a Pilot Mount and a Coupling Half to achieve this style of mount.*				
Caliper Brake w/T Bracket	835000				8
Brake Air Hose Assembly	835400				2
Disc, 16" OD	855800				9

Keys are included.

Bushing Options (for 1.875 bore clutches only)

Bushings fit within the bore of the existing clutch, reducing the bore to the amount indicated.

Product Number	Reduces Clutch Bore Size to (In)	Shipping Wt. (Lbs)
805600	1.000	2
809200	1.375	2
809300	1.438	2
809400	1.500	2
809500	1.625	2
809600	1.750	2
809900	No Bore/Customer machines	2

Coupling Half Options, see page 367 for coupling specifications

A Coupling Half is used for in-line applications. It is important to review the Maximum Misalignment allowable before specifying. To achieve a Pilot Mount with Coupling Half mounting configuration:

1. Select a Pilot Mount Clutch-Brake from above;
2. Order Clutch-Brake and Coupling Half separately.
3. Coupling Half is less taper lock bushing. Use Dodge Taper Lock® #2517 (1.000 to 2.500 inch bore range). Customer furnished.

Product Number	Maximum Bore Size (In)	Shipping Wt. (Lbs)
809700	2.500	33

Torque Vs. Air Pressure

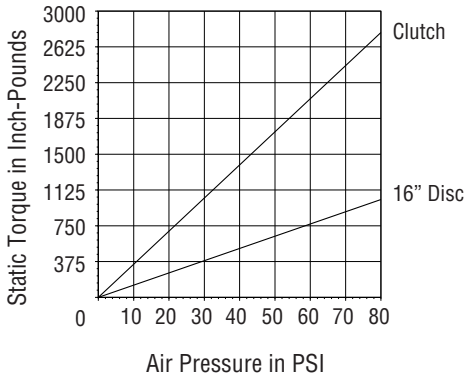

NOTE: Dynamic torque is approximately 85% of static torque.

HCDB MODEL CLUTCH-DISC CALIPER BRAKES - APPROXIMATE DIMENSIONS (INCHES)

Pilot Mount

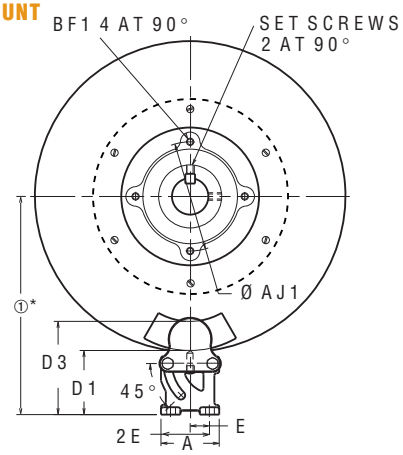

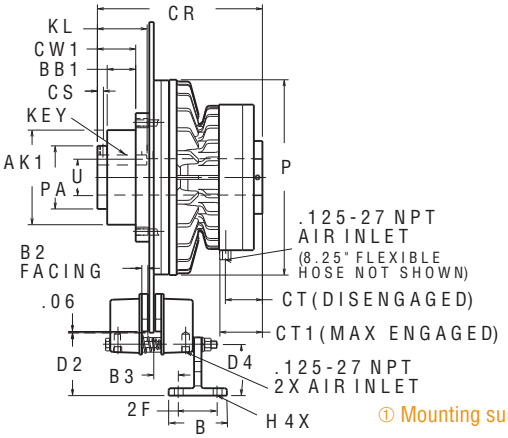

① Mounting surface to disc center = Disc Radius + D2

PRODUCT NUMBER	AJ1	AK1±.001	BB1	BF1	CR	CS	CT	CT1	CW1	KL	KEY (SQ)	P	PA	SET SCREWS	U +.001 -.000
810050	5.625	4.873	1.47	.375-16	8.50	0.31	1.92	2.14	1.97	2.56	0.500	10.06	3.25	.375-16	1.875
810055	5.625	4.873	1.47	.375-16	8.50	0.31	1.92	2.14	1.97	2.56	0.500	10.06	3.25	.375-16	1.688

PRODUCT NUMBER	OD (IN.)	A	B	B3	D1	D2	D3	D4	E	2E	2F
855800	16	3.00	3.00	1.27	3.30	3.24	4.80	2.62	1.00	2.00	2.00
835000	10	3.00	3.00	1.27	3.30	3.24	4.80	2.62	1.00	2.00	2.00

Pilot Mount w/Coupling Half

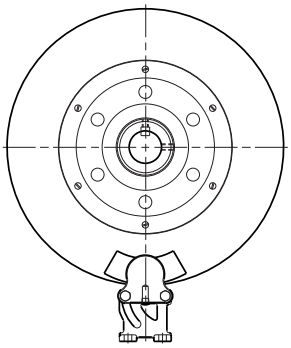

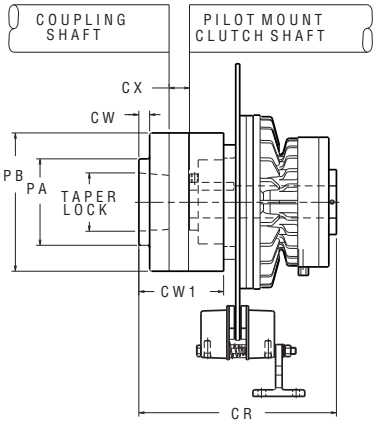

PRODUCT NUMBER	CR	CW	CW1	CX	PA	PB	DODGE TAPER LOCK® BUSHING
809700	11.43	0.63	4.90	1.18	5.00	7.00	#2517

Sheave Mount

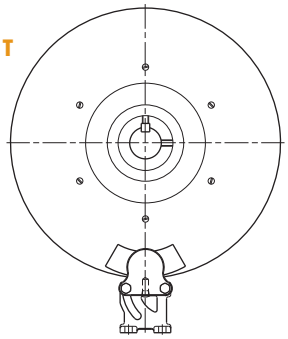

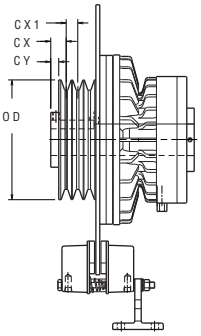

PRODUCT NUMBER	SHEAVE BELT	SHEAVE GROOVE	OD	CX	CX1	CY
810010	"5V"	3	7.10	0.91	0.69	0.47

METRIC FLANGE MOUNTED CLUTCH-BRAKES

Choose from **3 design options**:

FMCB basic open clutch-brake:

- Available in black oxide coating
- **Bore/Shaft** sizes from 19 to 42 millimeters
- Flange or Foot mount capability
- Optional Input Unit for use with pulleys and couplings

FMCBE basic enclosed clutch-brake:

- Available in either electroless nickel plating or black oxide coating
- **Bore/Shaft** sizes from 14 to 42 millimeters
- Flange or Foot mount capability
- Optional Input Unit for use with pulleys or couplings

FMBCES enclosed, spring engaged clutch-brake:

- Spring engaged brake combined with air engaged clutch
- Double acting piston design prevents overlap of clutch and brake functions
- Available in either electroless nickel plating or black oxide coating
- **Bore/shaft sizes** from 14 to 42 millimeters
- Flange or Foot mount capability
- Optional Input Unit for use with pulleys or couplings

Metric Flange Mounted Clutch-Brakes

Metric Flange Mounted Clutch-Brakes are available in both an Open and an Enclosed design. The Open Design promotes improved air circulation for longer life and greater operating efficiency. The Enclosed design keeps dirt, dust, moisture and other contaminants out and worn friction material from escaping

These clutch-brakes mount directly to IEC-Face motors and reducers and provide absolute control. These units fit IEC frame sizes 71A to 160M.

Design Style Comparisons

The tables below show performance comparisons between the design styles. This is an overview, to aid in selection. Please refer to the specific product catalog pages prior to final determination, to insure all features and benefits match your application.

Thermal Capacities

Thermal capacity is based upon 50% clutch and 50% brake usage. Operating speed is 1500 rpm for all data.

Model/Design Style	Watts rating by Model Size					
	14	19	24	28	38	42
FMCBE	104	134	134	246	328	328
FMCBES	104	134	134	246	328	328
FMCB	--	370	370	670	670	850

Overhung Load Data

Data is based upon 50% clutch and 50% brake usage. Operating speed is 1500 rpm for all data.

Model/Design Style	Weight (Kg) rating by Model Size					
	14	19	24	28	38	42
FMCBE	35	100	95	95	120	135
FMCBES	35	100	95	95	120	135
FMCB	--	100	95	95	120	135

Static Torque Capacity

Data is based upon maximum achieved at 6 Bars at psi.

Model/Design Style	Torque (Nm) rating by Model Size						
	14	19	24	28	7-38	8-38	42
FMCBE	25	33	33	85	125	167	270
FMCBES	10	18	18	32	46	74	107
FMCB	--	33	33	85	125	167	270
Clutch:							
FMCBE	22	33	33	77	110	151	240
FMCBES	18	27	27	44	64	72	105
FMCB	--	33	33	77	110	151	240

Typical Applications

Shown are four typical mounting applications for these clutch-brakes. Any of the three design options (FMCBE, FMCBES or FMCE) can be mounted in any one of these configurations. You will find the specific product requirements listed on the catalog page for each design style.

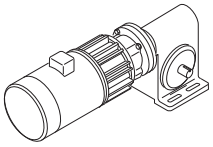

Flange Mounted

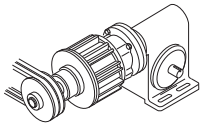

Flange Mounted with Input Unit

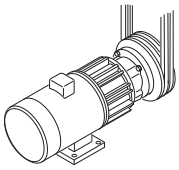

Flange Mounted

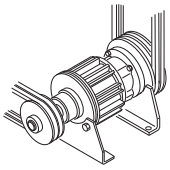

Flange Mounted with Input Unit

METRIC FMCBE CLUTCH-BRAKES – MODELS 70-14

FMCBE Flange Mounted Clutch-Brakes are designed for controlled starts and stops in hostile, dirty environments. Totally enclosed design prevents contaminants from interfering with operation of the units while keeping worn friction material from escaping into the environment.

- Compatible with IEC-B14 face motors up to kW-56
- Static Torque up to 10 Nm (brake) and 10 Nm (clutch)
- Overhung Load Capacity up to 32 kilograms
- Design Operating Speed up to 3600 R.P.M.
- Flange mounts directly to motors and reducers
- FMCBE with Integral Valve combines a Flange mounted, totally-enclosed clutch/brake with a single solenoid 4-way spool valve mounted directly to the clutch/brake air chamber. Air pressure is directed to the piston to perform either clutch or brake functions.
- Eliminates need for quick exhaust valves
- 115 Volt is standard on FMCBE
- The Integral Valve is available for 12, 24 and 115 volt systems
- Available in black oxide coating
- Simplified; one product number for a clutch-brake combination control valve
- Reduced number of air line connections for quicker install

METRIC FMCBE CLUTCH-BRAKES, TOTALLY ENCLOSED

Model Number	Product Number	Valve Voltage	Shaft/Bore (mm)	Thermal Capacity Up To	OVERHUNG LOAD CAPACITY (kg) 1500 RPM	Shipping Wt. (kg)
FMCBE-70-14	801360	N/A	14	75W	32	5
FMCBE-70-14/IV	801361	115V	14	75W	32	5.4

NOTE: Thermal Capacity (HP_t) and Overhung Load data is based upon 50% clutch and 50% brake usage.

IEC MOTOR/FRAME SELECTION CHART

Use this chart as specification and operational criteria for your application.

HP/KW of Motor	RPM	Frame Number	Motor Shaft (mm)
.25/.33	3450	D71C	14
.25/.33	1725	D71C	14
.37/.50	3450	D71C	14
.37/.50	1725	D71C	14
.56/.75	3450	D71C	14

TORQUE VS. AIR PRESSURE

Model 70-14

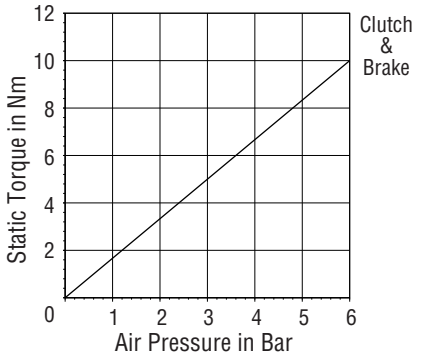

NOTE: Dynamic torque is approximately 85% of static torque.

Torque (In. Lbs.) = Nm x 8.849
PSI = Bar ÷ .0689

METRIC FMCBE CLUTCH-BRAKES, APPROXIMATE DIMENSIONS

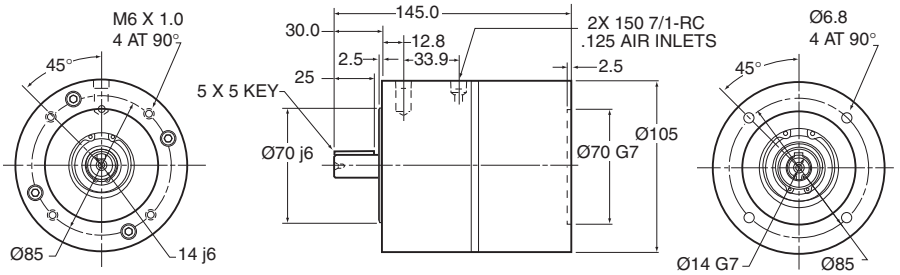

METRIC FMCBE INTEGRAL VALVE CLUTCH-BRAKES, APPROXIMATE DIMENSIONS

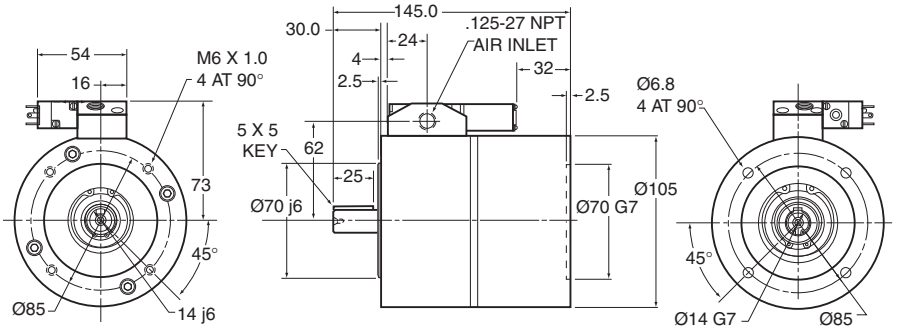

METRIC FMCB CLUTCH-BRAKES – MODELS 130-19 & 130-24

FMCB Flange Mounted Clutch-Brakes with their open design, promote improved air circulation. Heat build-up and torque fade is reduced, providing longer life and greater operating efficiency. Choose from

2 Models:

- **Bore sizes** range from 19 to 24 millimeters
- Available in black oxide coating
- Static Torque up to 33 Nm (brake) and 33 Nm (clutch)
- Overhung Load Capacity up to 150 kilograms
- Design Speed up to 1500 rpm. Consult factory for higher speed
- Flange mounts directly to motors and reducers
- Compatible with IEC-B5 face motors up to 1,5 KW
- Optional Foot Mount is available for belt drive applications
- Optional Input Unit allows you to incorporate pulleys or coupling into your application

Metric FMCB Clutch-Brakes, Open Design

Standard Clutch-Brake is Flange Mounted. Order Foot Mount separately for belt drive applications. Order Input Unit to incorporate pulleys into your application.

Model Number	Product Number	Shaft/Bore (mm)	Thermal Capacity Up To	Overhung Load Capacity (kg) 1000 RPM	Overhung Load Capacity (kg) 1500 RPM	Shipping Wt. (kg)
Black Coating:						
FMCB-130-19	801400	19	370 W	150	100	18
FMCB-130-24	801403	24	370 W	143	95	18

NOTE: Thermal Capacity and Overhung Load data is based upon 50% clutch and 50% brake usage.

Model Number	Product Number	Foot Mount Set Product Number	Shipping Wt. (kg)	Input Unit Product Number	Shipping Wt. (kg)
Black Coating:					
FMCB-130-19	801400	801427	2,2	801424	3
FMCB-130-24	801403	801427	2,2	801425	3

IEC Motor/Frame Selection Chart

Use this chart as specification and operational criteria for your application.

KW of Motor	RPM	Frame Number	Motor Shaft (mm)	Clutch-Brake Model Number
0,37	1000	80	19	FMCB-130-19
0,55	1000	80	19	FMCB-130-19
0,75	1000	90S	24	FMCB-130-24
0,75	1500	80	19	FMCB-130-19
1,1	1000	90L	24	FMCB-130-24
1,1	1500	90S	24	FMCB-130-24
1,5	1500	90L	24	FMCB-130-24

Torque Vs. Air Pressure

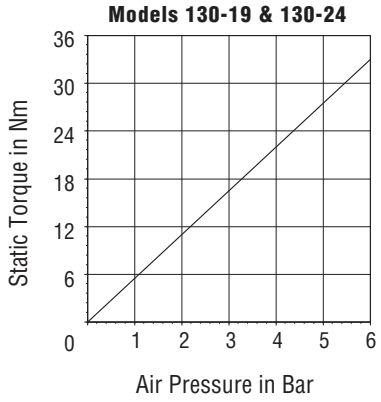

NOTE: Dynamic torque is approximately 85% of static torque.

Torque (In. Lbs.) = Nm x 8.849
PSI = Bar ÷ .0689

METRIC FMCB MODEL CLUTCH-BRAKES - APPROXIMATE DIMENSIONS (MILLIMETERS)

Models 130-19 & 130-24

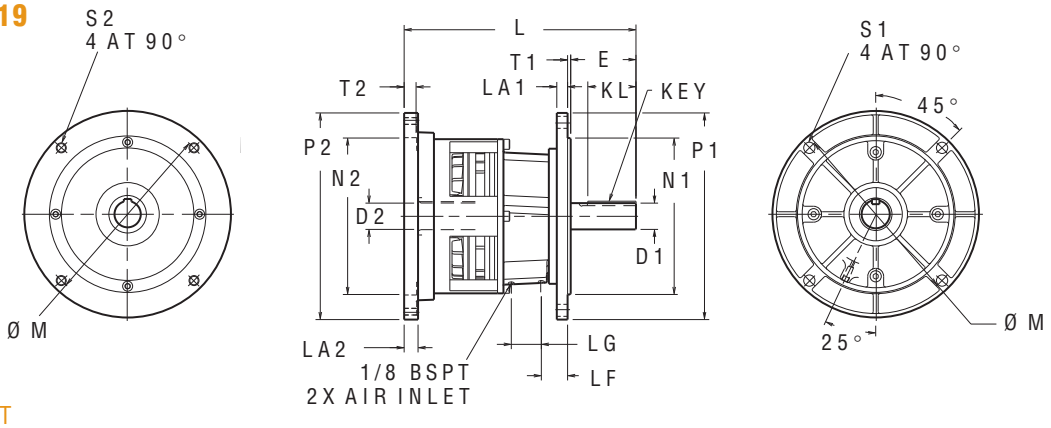

MODEL	PRODUCT NUMBER	D1	D2	E	KEY	KL	L	LA1	LA2	LF	LG	M	N1j6	N2G7	P1	P2	S1	S2	T1	T2
130-19	801400	19j6	19G7	37	6SQ	32	210,5	13	6	27	37	165	130	130	200	200	12	11	3,5	5
130-24	801403	24j6	24G7	47	7X8	35	220,5	14	6	27	37	165	130	130	200	200	12	11	3,5	5

Models 130-19 & 130-24 with Input

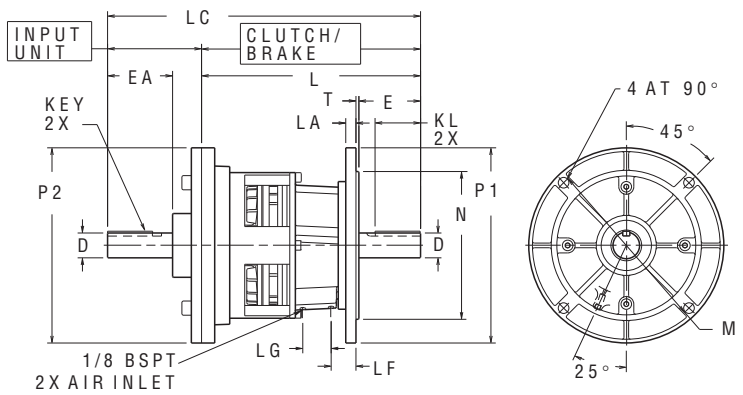

MODEL	PRODUCT NUMBER	INPUT NUMBER	D	E	EA	KEY	KL	L	LA	LC	LF	LG	M	N1j6	P1	P2	S	T
130-19	801400	801424	19j6	37	43	6 SQ	32	210,5	10	280,5	27	37	165	130	200	200	11	3,5
130-24	801403	801425	24j6	47	55	7X8	35	220,5	10	302,5	27	37	165	130	200	200	11	3,5

Models 130-19 & 130-24 with Input & Foot

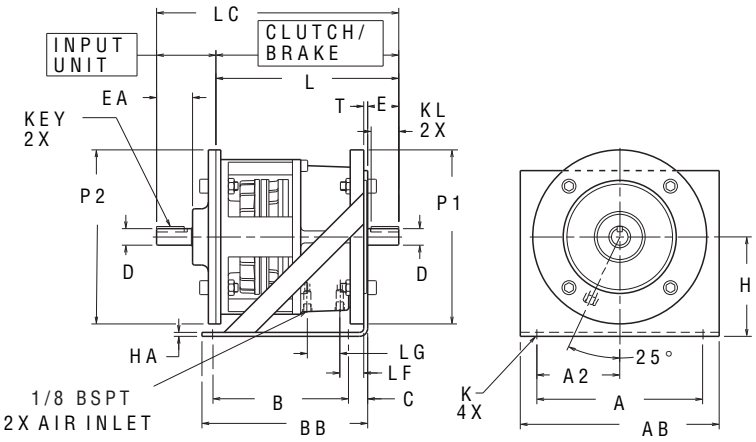

MODEL	PRODUCT NUMBER	INPUT NUMBER	FOOT NUMBER	A	AB	AZ	B	BB	C	Dj6	E	EA	H	HA	K	KEY	KL	L	LC	LF	LG	P1	P2	T
130-19	801400	801424	801427	191	220	95	146	191	32	19j6	37	43	114	5	11	6 SQ	32	210,5	280,5	27	37	200	200	3,5
130-24	801403	801425	801427	191	220	95	146	191	32	24j6	47	55	114	5	11	7X8	35	220,5	302,5	27	37	200	200	3,5

NOTE: Drawings are expressed in third angle projection.

METRIC FMCB CLUTCH-BRAKES – MODELS 7-28 & 7-38

FMCB Flange Mounted Clutch-Brakes with their open design, promote improved air circulation. Heat build-up and torque fade is reduced, providing longer life and greater operating efficiency. Choose from **2 Models**:

- **Bore sizes** range from 28 to 38 millimeters
- Available in black oxide coating
- Static Torque up to 125 Nm (brake) and 110 Nm (clutch)
- Overhung Load Capacity up to 180 kilograms
- Design Speed up to 1500 rpm. Consult factory for higher speed
- Flange mounts directly to motors and reducers
- Compatible with IEC-B5 face motors up to 5,5 KW
- Optional Foot Mount is available for belt drive applications
- Optional Input Unit allows you to incorporate pulleys into your application

Metric FMCB Clutch-Brakes, Open Design

Standard Clutch-Brake is Flange Mounted. Order Foot Mount separately for belt drive applications. Order Input Unit to incorporate pulleys into your application.

Model Number	Product Number	Shaft/Bore (mm)	Thermal Capacity Up To	Overhung Load Capacity (kg) 1000 RPM	Overhung Load Capacity (kg) 1500 RPM	Shipping Wt. (kg)
Black Coating:						
FMCB-7-28	801610	28	670 W	143	95	27
FMCB-7-38	801613	38	670 W	180	120	27

NOTE: Thermal Capacity and Overhung Load data is based upon 50% clutch and 50% brake usage.

Model Number	Product Number	Foot Mount Set (2 Mounts) Product Number	Shipping Wt. (kg)	Input Unit Product Number	Shipping Wt. (kg)
Black Coating:					
FMCB-7-28	801610	801632	5	801627	5
FMCB-7-38	801613	801633	5	801628	5

IEC Motor/Frame Selection Chart

Use this chart as specification and operational criteria for your application.

KW of Motor	RPM	Frame Number	Motor Shaft (mm)	Clutch-Brake Model Number
1,5	1000	100L	28	FMCB-7-28
2,2	1000	112M	28	FMCB-7-28
2,2	1500	100L	28	FMCB-7-28
3,0	1000	132S	38	FMCB-7-38
3,0	1500	100L	28	FMCB-7-28
4,0	1500	112M	28	FMCB-7-28
5,5	1500	132S	38	FMCB-7-38

Torque Vs. Air Pressure

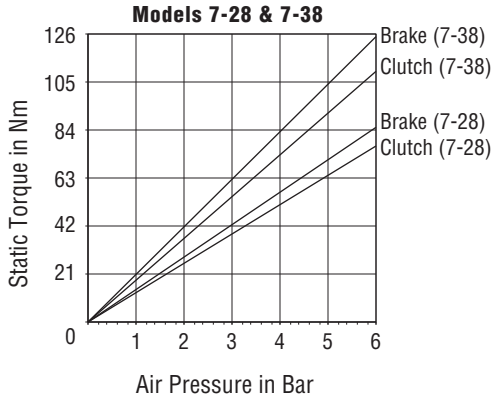

NOTE: Dynamic torque is approximately 85% of static torque.

Torque (In. Lbs.) = Nm x 8.849
PSI = Bar ÷ .0689

METRIC FMCB MODEL CLUTCH-BRAKES - APPROXIMATE DIMENSIONS (MILLIMETERS)

Models 7-28 & 7-38

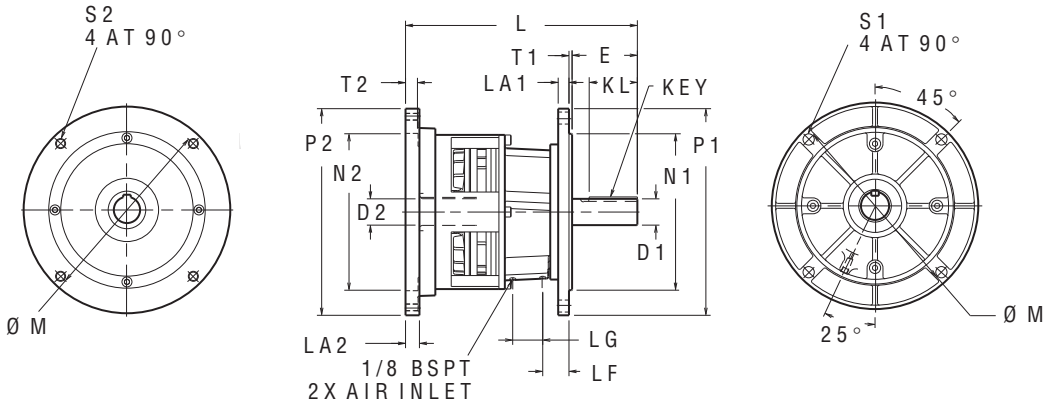

MODEL	PRODUCT NUMBER	D1	D2	E	KEY	KL	L	LA1	LA2	LF	LG*	M	N1j6	N2G7	P1	P2	S1	S2	T1	T2
7-28	801610	28j6	28G7	57	7X8	44	269	12	16	36	42	215	180	180	250	250	14	M12	4	4,8
7-38	801613	38k6	38F7	76	8X10	51	294	17	18	37	42	265	230	230	300	300	14	M12	4	4,8

*Second pipe thread on FMCBE models only.

Models 7-28 & 7-38 with Input

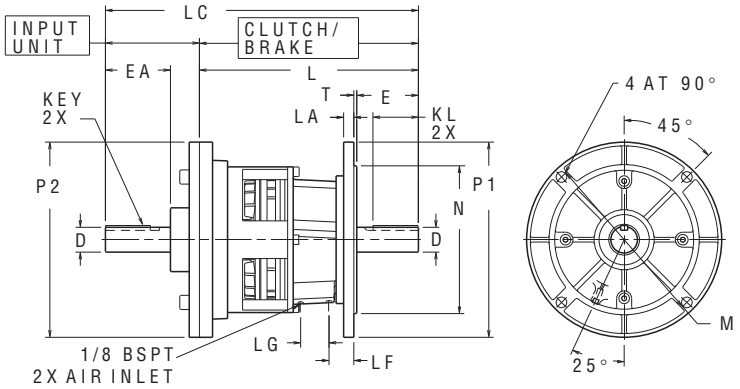

MODEL	PRODUCT NUMBER	INPUT NUMBER	D	E	EA	KEY	KL	L	LA	LC	LF	LG*	M	Nj6	P1	P2	S	T
7-28	801610	801627	28j6	57	59	7X8	44	269	13	371	36	42	215	180	250	250	14	4
7-38	801613	801628	38k6	76	79	8X10	51	294	14	409	37	42	265	230	300	300	14	4

*Second pipe thread on FMCBE models only.

Models 7-28 & 7-38 with Input & Foot

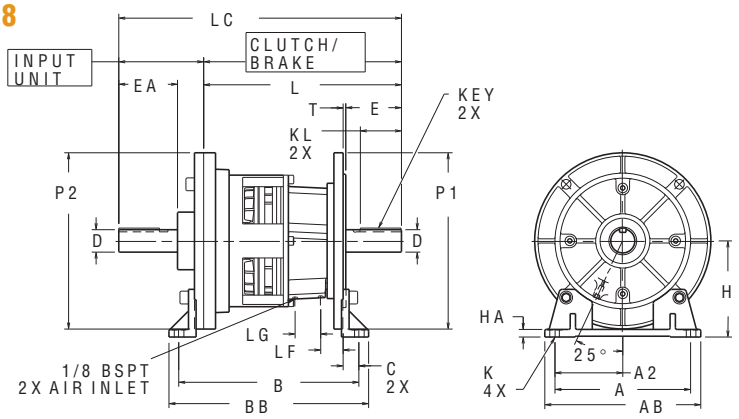

MODEL	PRODUCT NUMBER	INPUT NUMBER	FOOT NUMBER	A	AB	AZ	B	BB	C	D	E	EA	H	HA	K	KEY	KL	L	LC	LF	LG*	P1	P2	T
7-28	801610	801627	801632	254	292	127	271	303	26	28j6	57	59	130	14	14	7X8	44	269	371	36	42	250	250	4
7-38	801613	801628	801633	254	292	127	280	312	26	38K6	76	79	155	14	14	8X10	51	294	409	37	42	300	300	4

NOTE: Drawings are expressed in third angle projection.

METRIC FMCB CLUTCH-BRAKES – MODELS 8-38 & 8-42

FMCB Flange Mounted Clutch-Brakes with their open design, promote improved air circulation. Heat build-up and torque fade is reduced, providing longer life and greater operating efficiency. Choose from **2 Models**:

- **Bore sizes** range from 38 to 42 millimeters
- Available in black oxide coating
- Static Torque up to 240 Nm (brake) and 220 Nm (clutch)
- Overhung Load Capacity up to 200 kilograms
- Design Speed up to 1500 rpm. Consult factory for higher speed
- Flange mounts directly to motors and reducers
- Compatible with IEC-B5 face motors up to 11 KW
- Optional Foot Mount is available for belt drive applications
- Optional Input Unit allows you to incorporate pulleys into your application

Metric FMCB Clutch-Brakes, Open Design

Standard Clutch-Brake is Flange Mounted. Order Foot Mount separately for belt drive applications. Order Input Unit to incorporate pulleys into your application.

Model Number	Product Number	Shaft/Bore (mm)	Thermal Capacity Up To	Overhung Load Capacity (kg) 1000 RPM	Overhung Load Capacity (kg) 1500 RPM	Shipping Wt. (kg)
Black Coating:						
FMCB-8-38	801616	38	850 W	195	130	46
FMCB-8-42	801619	42	850 W	200	135	68

NOTE: Thermal Capacity and Overhung Load data is based upon 50% clutch and 50% brake usage.

Model Number	Product Number	Foot Mount Set (2 Mounts) Product Number	Shipping Wt. (kg)	Input Unit Product Number	Shipping Wt. (kg)
Black Coating:					
FMCB-8-38	801616	801633	5	801629	6
FMCB-8-42	801619	801634	5	801630	6

IEC Motor/Frame Selection Chart

Use this chart as specification and operational criteria for your application.

KW of Motor	RPM	Frame Number	Motor Shaft (mm)	Clutch-Brake Model Number
4,0	1000	132M	38	FMCB-8-38
5,5	1000	132M	38	FMCB-8-38
7,5	1000	160M	42	FMCB-8-42
7,5	1500	132M	38	FMCB-8-38
11	1500	160M	42	FMCB-8-42

Torque Vs. Air Pressure

Models 8-38 & 8-42

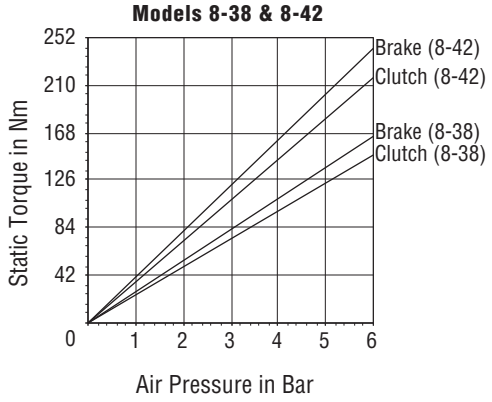

NOTE: Dynamic torque is approximately 85% of static torque.

Torque (In. Lbs.) = Nm x 8.849
PSI = Bar ÷ .0689

METRIC FMCB MODEL CLUTCH-BRAKES - APPROXIMATE DIMENSIONS (MILLIMETERS)

Models 8-38 & 8-42

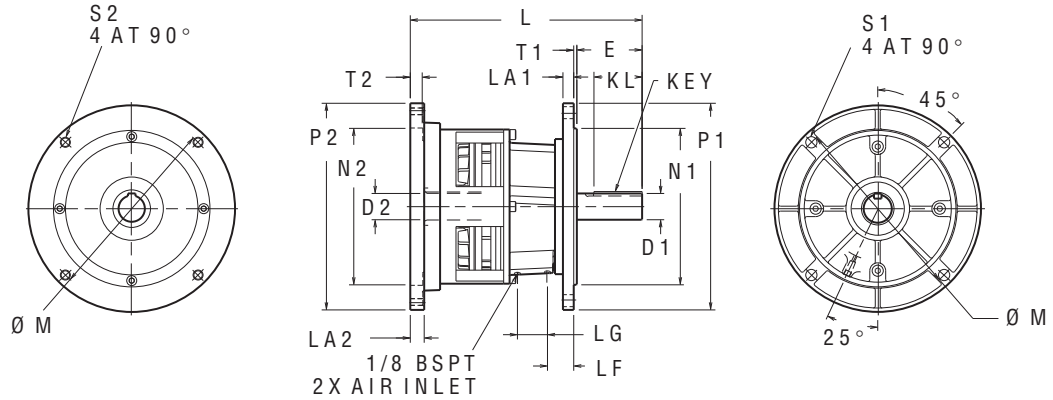

MODEL	PRODUCT NUMBER	D1	D2	E	KEY	KL	L	LA1	LA2	LF	LG*	M	N1j6	N2G7	P1	P2	S1	S2	T1	T2
8-38	801616	38k6	38F7	76	8X10	51	306	10	18	37	48	265	230	230	300	300	14	M12	4	4,8
8-42	801619	42k6	42F7	104	8X12	76	370	10	22	42	48	300	250	250	330	330	18	M16	5	19

*Second pipe thread on FMCBE models only.

Models 8-38 & 8-42 with Input

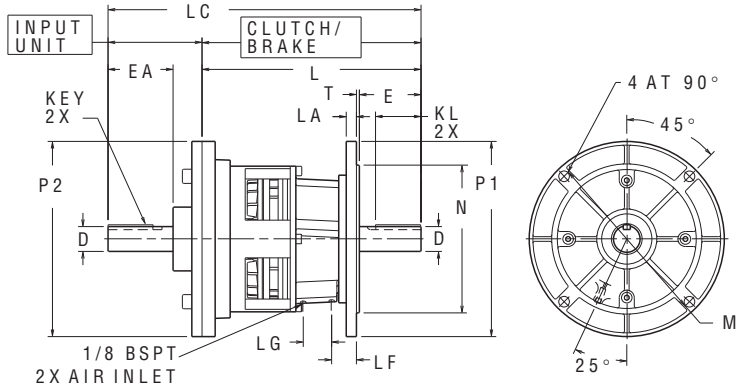

MODEL	PRODUCT NUMBER	INPUT NUMBER	D	E	EA	KEY	KL	L	LA	LC	LF	LG*	M	N1j6	P1	P2	S	T
8-38	801616	801629	38K6	76	79	8X10	51	306	12	435	37	48	265	230	300	300	14	4
8-42	801619	801630	42K6	104	110	8X12	76	370	17	529	42	48	300	250	330	330	18	5

*Second pipe thread on FMCBE models only.

Models 8-38 & 8-42 with Input & Foot

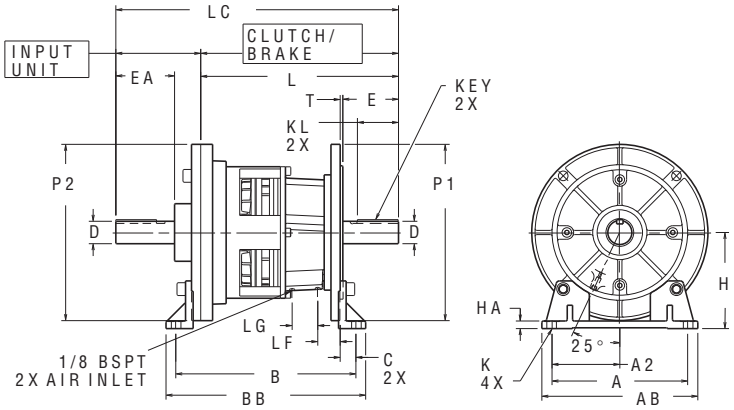

MODEL	PRODUCT NUMBER	INPUT NUMBER	FOOT NUMBER	A	AB	AZ	B	BB	C	D	E	EA	H	HA	K	KEY	KL	L	LC	LF	LG*	P1	P2	T
8-38	801616	801629	801633	254	292	127	289	320	26	38K6	76	79	155	14	14	8X10	51	306	435	37	48	300	300	4
8-42	801619	801630	801634	254	292	127	337	374	29	42K6	104	110	180	14	18	8X12	76	370	529	42	48	330	330	5

NOTE: Drawings are expressed in third angle projection.

METRIC FMCBE CLUTCH-BRAKES MODELS 110-14, & 130-19 &130-24

FMCBE Flange Mounted Clutch-Brakes are designed for controlled starts and stops in hostile, dirty environments. Totally enclosed design prevents contaminants from interfering with operation of the units while keeping worn friction material from escaping into the environment. Choose from **2 Models**:

- **Bore sizes** range from 14 to 24 millimeters
- All units available in either electroless nickel plating or black oxide coating
- Meets NEMA standard 1.26.5 for waterproof machines
- Static Torque up to 33 Nm (brake) and 33 Nm (clutch)
- Overhung Load Capacity up to 150 kilograms
- Design Speed up to 1500 rpm. Consult factory for higher speed
- Flange mounts directly to motors and reducers
- Compatible with IEC-B5 face motors up to 1,5 KW
- Optional Foot Mount is available for belt drive applications
- Optional Input Unit allows you to incorporate pulleys or coupling into your application
- For additional corrosion protection, contact the factory

Metric FMCBE Clutch-Brakes, Totally Enclosed

Standard Clutch-Brake is Flange Mounted. Order Foot Mount separately for belt drive applications. Order Input Unit to incorporate pulleys into your application.

Model Number	Product Number	Shaft/Bore (mm)	Thermal Capacity Up To	Overhung Load Capacity (kg) 1000 RPM	Overhung Load Capacity (kg) 1500 RPM	Shipping Wt. (kg)
Black Coating:						
FMCBE-110-14	801433	14	104 W	45	35	11
FMCBE-130-19	801660	19	134 W	150	100	18
FMCBE-130-24	801663	24	134 W	143	95	18
Nickel Plating:						
FMCBE-110-14	801444	14	104 W	45	35	12
FMCBE-130-19	801464	19	134 W	150	100	18
FMCBE-130-24	801484	24	134 W	150	95	18

NOTE: Thermal Capacity and Overhung Load data is based upon 50% clutch and 50% brake usage.

Model Number	Product Number	Foot Mount Set (2 Mounts) Product Number	Shipping Wt. (kg)	Input Unit Product Number	Shipping Wt. (kg)
Black Coating:					
FMCBE-110-14	801433	801435	2,2	801434	3
FMCBE-130-19	801660	801427	2,2	801424	3
FMCBE-130-24	801663	801427	2,2	801425	3
Nickel Plating:					
FMCBE-110-14	801444	801454	2,2	801445	3
FMCBE-130-19	801464	801455	2,2	801498	2,2
FMCBE-130-24	801484	801455	2,2	801499	2,2

IEC Motor/Frame Selection Chart

Use this chart as specification and operational criteria for your application.

KW of Motor	RPM	Frame Number	Motor Shaft (mm)	Clutch-Brake Model Number
0,25	1500	71A	14	FMCBE-110-14
0,37	1000	80	19	FMCBE-130-19
0,37	1500	71B	14	FMCBE-110-14
0,55	1000	80	19	FMCBE-130-19
0,75	1000	90S	24	FMCBE-130-24
0,75	1500	80	19	FMCBE-130-19
1,1	1000	90L	24	FMCBE-130-24
1,1	1500	90S	24	FMCBE-130-24
1,5	1500	90L	24	FMCBE-130-24

Torque Vs. Air Pressure

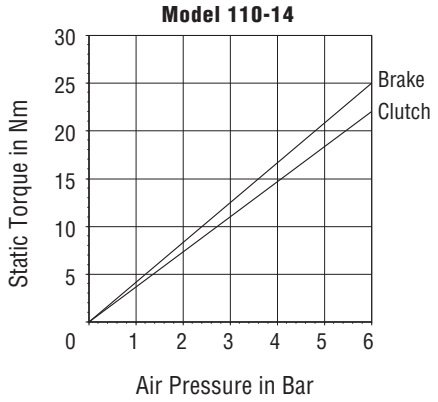

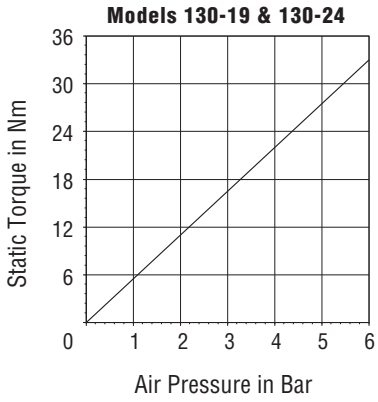

NOTE: Dynamic torque is approximately 85% of static torque.

Torque (In. Lbs.) = Nm x 8.849
PSI = Bar ÷ .0689

METRIC FMCBE MODEL CLUTCH-BRAKES - APPROXIMATE DIMENSIONS (MILLIMETERS)

Models 110-14, 130-19& 130-24

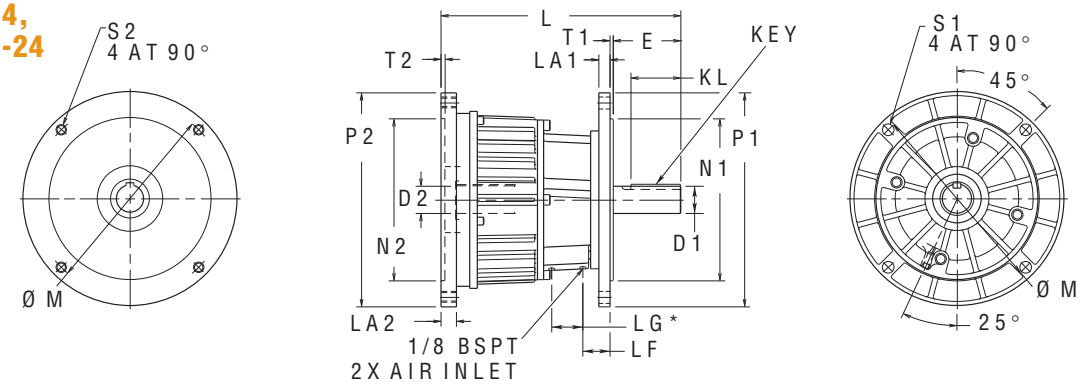

MODEL	FMCBE	FMCBE(NICKEL)	D1	D2	E	KEY	KL	L	LA1	LA2	LF	LG	M	N1j6	N2G7	P1	P2	S1	S2	T1	T2
110-14	801433	801444	14j6	14G7	27	5SQ	25	161,5	8	6	23	30	130	110	110	150	150	10	M8	3,5	4
130-19	801660	801464	19j6	19G7	37	6SQ	27	210,5	10	11	27	37	165	130	130	200	198	12	M10	3,5	5
130-24	801663	801484	24j6	24G7	47	7x8	35	220,5	10	11	27	37	165	130	130	200	198	12	M10	3,5	5

Models 110-14, 130-19& 130-24 with Input

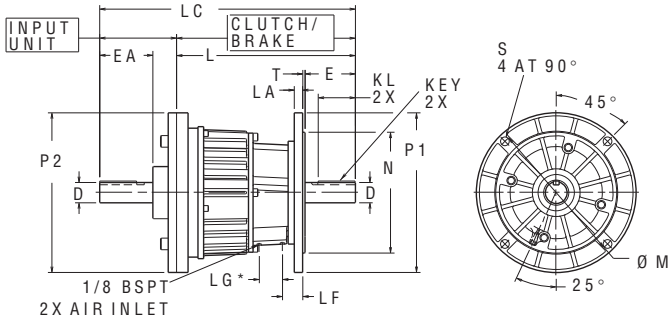

MODEL	FMCBE	FMCBE(NICKEL)	D1	E	EA	KEY	KL	L	LA	LC	LF	LG	M	N1j6	P1	P2	S1	T
110-14	801433	801444	14j6	27	29	5SQ	25	161,5	8	211,5	23	30	130	110	150	150	10	3,5
130-19	801660	801464	19j6	37	43	6SQ	27	210,5	10	280,5	27	37	165	130	200	198	12	3,5
130-24	801663	801484	24j6	47	55	7x8	35	220,5	10	302,5	27	37	165	130	200	198	12	3,5

Models 110-14 with Input & Foot

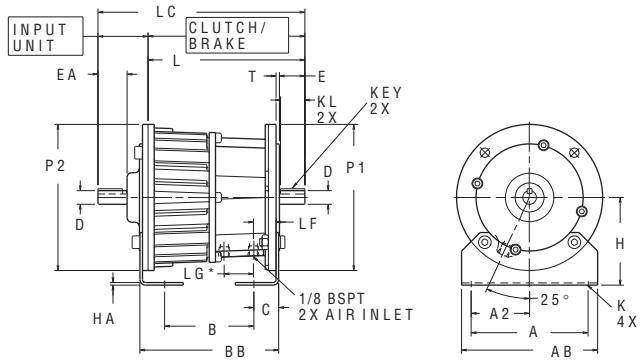

Models 130-19 & 130-24 with Input & Foot

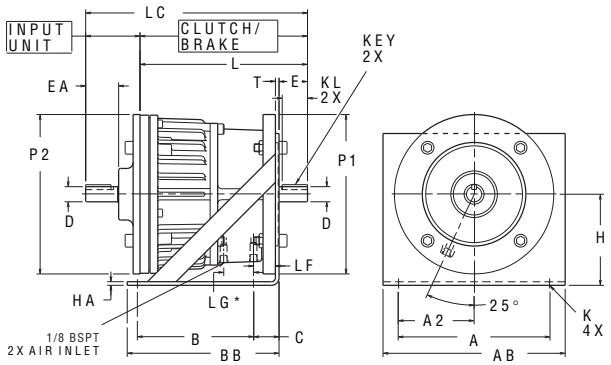

MODEL	FMCBE	FMCBE(NICKEL)	INPUT(BLK)	INPUT(NICKEL)	FOOT(BLK)	FOOT(NICKEL)	A	AB	AZ	B	BB	C	Dj6	E	EA	H
110-14	801433	801444	801434	801445	801435	801454	120	140	60	92	142	25	14	27	29	90
130-19	801660	801464	801424	801498	801427	801455	191	229	95	146	191	32	19	37	43	114
130-24	801663	801485	801425	801499	801427	801455	191	229	95	146	191	32	24	47	55	114

MODEL	HA	K	KEY	KL	L	LC	LF	LG	P1	P2	T
110-14	3	9X19	5SQ	25	161,5	221,5	23	30	150	150	3,5
130-19	5	11	6SQ	27	210,5	280,5	27	37	200	198	3,5
130-24	5	11	7x8	35	220,5	302,5	27	37	200	198	3,5

NOTE: Drawings are expressed in third angle projection.

METRIC FMCBE CLUTCH-BRAKES – MODELS 7-28 & 7-38

FMCBE Flange Mounted Clutch-Brakes are designed for controlled starts and stops in hostile, dirty environments. Totally enclosed design prevents contaminants from interfering with operation of the units while keeping worn friction material from escaping into the environment. Choose from **2 Models**:

- **Bore sizes** range from 28 to 38 millimeters
- All units available in either electroless nickel plating or black oxide coating
- Meets NEMA standard 1.26.5 for waterproof machines
- Static Torque up to 125 Nm (brake) and 110 Nm (clutch)
- Overhung Load Capacity up to 180 kilograms
- Design Speed up to 1500 rpm. Consult factory for higher speed
- Flange mounts directly to motors and reducers
- Compatible with IEC-B5 face motors up to 5,5 KW
- Optional Foot Mount is available for belt drive applications
- Optional Input Unit allows you to incorporate pulleys or coupling into your application
- For additional corrosion protection, contact the factory

Metric FMCBE Clutch-Brakes, Totally Enclosed

Standard Clutch-Brake is Flange Mounted. Order Foot Mount separately for belt drive applications. Order Input Unit to incorporate pulleys into your application.

Model Number	Product Number	Shaft/Bore (mm)	Thermal Capacity Up To	Overhung Load Capacity (kg) 1000 RPM	Overhung Load Capacity (kg) 1500 RPM	Shipping Wt. (kg)
Black Coating:						
FMCBE-7-28	801666	28	246 W	143	95	28
FMCBE-7-38	801669	38	246 W	180	120	28
Nickel Plating:						
FMCBE-7-28	801485	28	246 W	143	95	28
FMCBE-7-38	801495	38	246 W	180	120	28

NOTE: Thermal Capacity and Overhung Load data is based upon 50% clutch and 50% brake usage.

Model Number	Product Number	Foot Mount Set (2 Mounts) Product Number	Shipping Wt. (kg)	Input Unit Product Number	Shipping Wt. (kg)
Black Coating:					
FMCBE-7-28	801666	801632	1,6	801627	2,2
FMCBE-7-38	801669	801633	1,6	801628	2,2
Nickel Plating:					
FMCBE-7-28	801485	801458	1,6	801575	2,2
FMCBE-7-38	801495	801460	1,6	801608	2,2

IEC Motor/Frame Selection Chart

Use this chart as specification and operational criteria for your application.

KW of Motor	RPM	Frame Number	Motor Shaft (mm)	Clutch-Brake Model Number
1,5	1000	100L	28	FMCBE-7-28
2,2	1000	112M	28	FMCBE-7-28
2,2	1500	100L	28	FMCBE-7-28
3,0	1000	132S	38	FMCBE-7-38
3,0	1500	100L	28	FMCBE-7-28
4,0	1500	112M	28	FMCBE-7-28
5,5	1500	132S	38	FMCBE-7-38

Torque Vs. Air Pressure

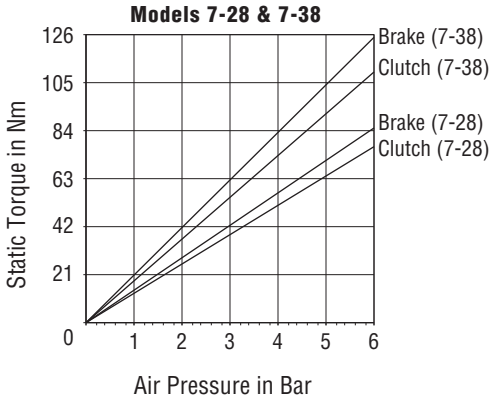

NOTE: Dynamic torque is approximately 85% of static torque.

Torque (In. Lbs.) = Nm x 8.849
PSI = Bar ÷ .0689

METRIC FMCBE MODEL CLUTCH-BRAKES - APPROXIMATE DIMENSIONS (MILLIMETERS)

Models 7-28 & 7-38

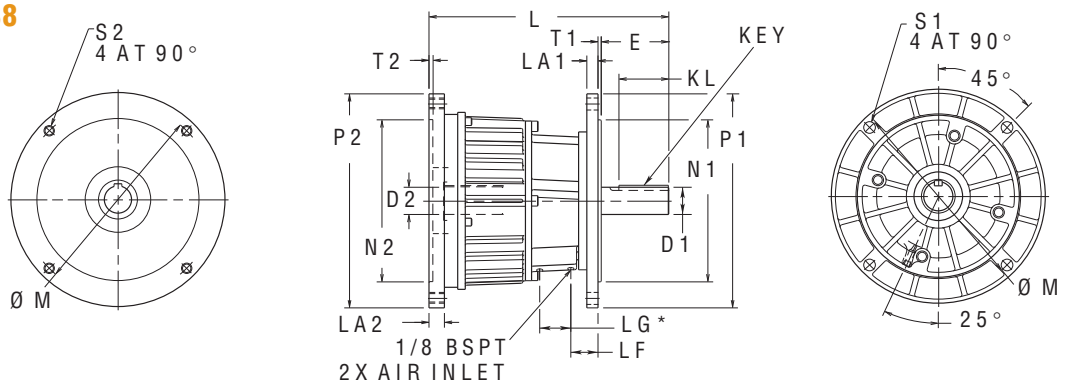

MODEL	FMCBE	FMCBE(NICKEL)	D1	D2	E	KEY	KL	L	LA1	LA2	LF	LG	M	N1^{j6}	N2^{G7}	P1	P2	S1	S2	T1	T2
7-28	801666	801485	28^{j6}	28^{G7}	57	7X8	44	273	13	16	36	42	215	180	180	250	244	14,5	M12	4	6
7-38	801669	801495	38^{k6}	38^{F7}	77	8X10	51	300	14	21	36	42	265	230	230	300	300	14,5	M12	4	5

Models 7-28 & 7-38 with Input

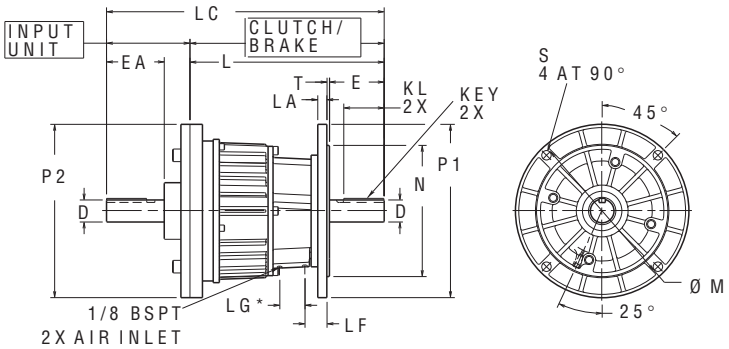

MODEL	FMCBE	FMCBE(NICKEL)	D1	E	EA	KEY	KL	L	LA	LC	LF	LG	M	N1^{j6}	P1	P2	S1	T
7-28	801666	801485	28^{j6}	57	60	7X8	44	273	13	375	36	42	215	180	200	198	12	4
7-38	801669	801495	38^{k6}	77	80	8X10	51	300	14	416	36	42	265	230	250	244	14,5	4

Models 7-28 & 7-38 with Input & Foot

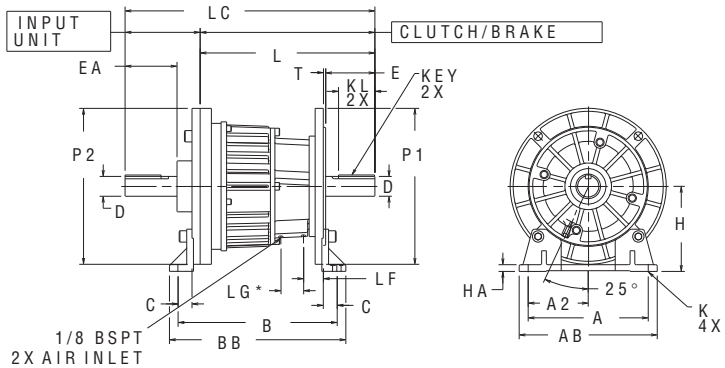

MODEL	FMCBE	FMCBE(NICKEL)	INPUT(BLK)	INPUT(NICKEL)	FOOT(BLK)	FOOT(NICKEL)	A	AB	AZ	B	BB	C	D^{j6}	E	EA	H
7-28	801666	801485	801627	801575	801632	801458	254	292	127	275	301	25	28	57	60	130
7-38	801669	801495	801628	801608	801633	801460	254	292	127	283	315	25	38	77	80	155

MODEL	HA	K	KEY	KL	L	LC	LF	LG	P1	P2	T
7-28	14	14	7X8	44	273	375	36	42	250	244	4
7-38	14	18	8X10	51	300	416	36	42	300	300	4

NOTE: Drawings are expressed in third angle projection.

METRIC FMCBE CLUTCH-BRAKES – MODELS 8-38 & 8-42

FMCBE Flange Mounted Clutch-Brakes are designed for controlled starts and stops in hostile, dirty environments. Totally enclosed design prevents contaminants from interfering with operation of the units while keeping worn friction material from escaping into the environment. Choose from **2 Models**:

- **Bore sizes** range from 38 to 42 millimeters
- All units available in either electroless nickel plating or black oxide coating
- Meets NEMA standard 1.26.5 for waterproof machines
- Static Torque up to 240 Nm (brake) and 220 Nm (clutch)
- Overhung Load Capacity up to 200 kilograms
- Design Speed up to 1500 rpm. Consult factory for higher speed
- Flange mounts directly to motors and reducers
- Compatible with IEC-B5 face motors up to 11 KW
- Optional Foot Mount is available for belt drive applications
- Optional Input Unit allows you to incorporate pulleys or coupling into your application
- For additional corrosion protection, contact the factory

Metric FMCBE Clutch-Brakes, Totally Enclosed

Standard Clutch-Brake is Flange Mounted. Order Foot Mount separately for belt drive applications. Order Input Unit to incorporate pulleys into your application.

Model Number	Product Number	Shaft/Bore (mm)	Thermal Capacity Up To	Overhung Load Capacity (kg) 1000 RPM	Overhung Load Capacity (kg) 1500 RPM	Shipping Wt. (kg)
Black Coating:						
FMCBE-8-38	801672	38	328 W	195	130	70
FMCBE-8-42	801675	42	328 W	200	135	70
Nickel Plating:						
FMCBE-8-38	801496	38	328 W	195	130	70
FMCBE-8-42	801497	42	328 W	200	135	70

NOTE: Thermal Capacity and Overhung Load data is based upon 50% clutch and 50% brake usage.

Model Number	Product Number	Foot Mount Set (2 Mounts) Product Number	Shipping Wt. (kg)	Input Unit Product Number	Shipping Wt. (kg)
Black Coating:					
FMCBE-8-38	801672	801633	5	801629	5
FMCBE-8-42	801675	801634	5	801630	5
Nickel Plating:					
FMCBE-8-38	801496	801460	5	801601	5
FMCBE-8-42	801497	801463	5	801602	5

IEC Motor/Frame Selection Chart

Use this chart as specification and operational criteria for your application.

KW of Motor	RPM	Frame Number	Motor Shaft (mm)	Clutch-Brake Model Number
4,0	1000	132M	38	FMCBE-8-38
5,5	1000	132M	38	FMCBE-8-38
7,5	1000	160M	42	FMCBE-8-42
7,5	1500	132M	38	FMCBE-8-38
11	1500	160M	42	FMCBE-8-42

Torque Vs. Air Pressure

Models 8-38 & 8-42

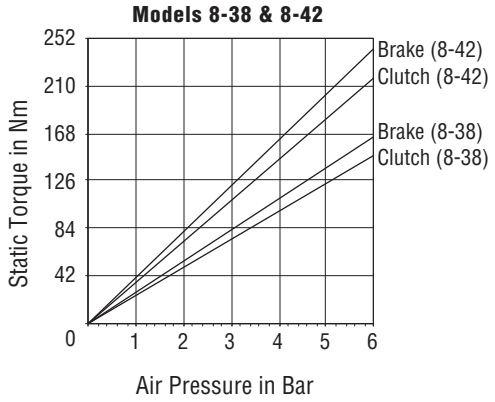

NOTE: Dynamic torque is approximately 85% of static torque.

Torque (In. Lbs.) = Nm x 8.849
PSI = Bar ÷ .0689

METRIC FMCBE MODEL CLUTCH-BRAKES - APPROXIMATE DIMENSIONS (MILLIMETERS)

Models 8-38 & 8-42

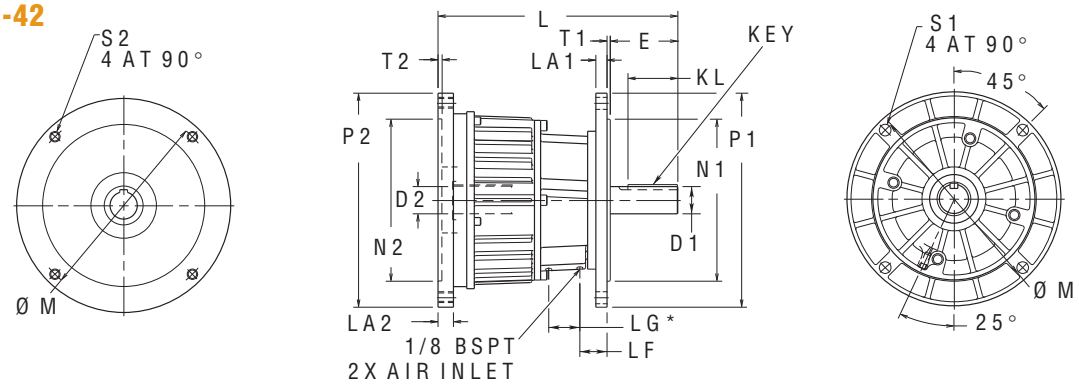

MODEL	FMCBE	FMCBE(NICKEL)	D1	D2	E	KEY	KL	L	LA1	LA2	LF	LG	M	N1j6	N2G7	P1	P2	S1	S2	T1	T2
8-38	801672	801496	11k6	38F7	77	8X10	51	314	12	21	36	48	265	230	230	300	300	14,5	M12	4	5
8-42	801675	801497	42k6	42F7	105	8X12	76	375	17	28	42	48	300	250	250	330	330	18,5	M16	5	5

Models 8-38 & 8-42 with Input

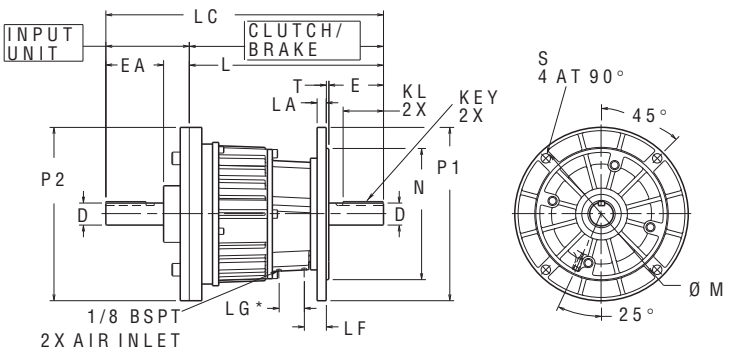

MODEL	FMCBE	FMCBE(NICKEL)	D1	E	EA	KEY	KL	L	LA	LC	LF	LG	M	N1j6	P1	P2	S1	T
8-38	801672	801496	11k6	77	80	8X10	51	314	12	444	36	48	265	230	300	300	14,5	4
8-42	801675	801497	42k6	105	110	8X12	76	375	17	534	42	48	300	250	330	330	18,5	5

Models 8-38 & 8-42 with Input & Foot

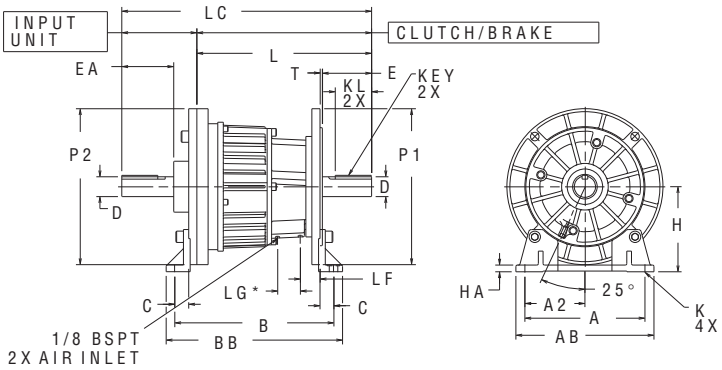

MODEL	FMCBE	FMCBE(NICKEL)	INPUT(BLK)	INPUT(NICKEL)	FOOT(BLK)	FOOT(NICKEL)	A	AB	AZ	B	BB	C	Dj6	E	EA	H
8-38	801672	801496	801629	801601	801633	801460	254	292	127	296	327	25	38	77	80	40
8-42	801675	801497	801630	801602	801634	801463	254	292	127	341	378	29	42	105	55	110

MODEL	HA	K	KEY	KL	L	LC	LF	LG	P1	P2	T
8-38	14	14	8X10	51	314	444	36	48	300	300	4
8-42	14	18	8X12	75	375	534	42	48	330	330	5

NOTE: Drawings are expressed in third angle projection.

METRIC FMCBES CLUTCH-BRAKES – MODELS 110-14, 130-19 & 130-24

FMCBES Flange Mounted Clutch-Brakes come with a spring engaged brake and air engaged clutch, making overlap of functions impossible. For applications where safety is a concern, this unit will engage the brake in the event of air pressure loss. Choose from **3 Models**:

- **Bore sizes** range from 14 to 24 millimeters
- All units available in either electroless nickel plating or black oxide coating
- Meets NEMA standard 1.26.5 for waterproof machines
- Static Torque up to 18 Nm (brake) and 27 Nm (clutch)
- Overhung Load Capacity up to 150 kilograms
- Design Speed up to 1500 rpm. Consult factory for higher speed
- Flange mounts directly to motors and reducers
- Compatible with IEC-B5 face motors up to 1,5 KW
- Optional Foot Mount is available for belt drive applications
- Optional Input Unit allows you to incorporate pulleys or coupling into your application
- For additional corrosion protection, contact the factory

METRIC FMCBES CLUTCH-BRAKES, ENCLOSED DESIGN - SPRING ENGAGED BRAKE

Standard Clutch-Brake is Flange Mounted. Order Foot Mount separately for belt drive applications. Order Input Unit to incorporate pulleys into your application.

Model Number	Product Number	Shaft/Bore (mm)	Thermal Capacity Up To	OVERHUNG LOAD CAPACITY (kg) 1000 RPM	1500 RPM	Shipping Wt. (kg)
Black Coating:						
FMCBES-110-14	801451	14	104 W	45	35	11
FMCBES-130-19	801466	19	134 W	150	100	18
FMCBES-130-24	801469	24	134 W	143	95	18
Nickel Plating:						
FMCBES-110-14	801452	14	134 W	45	35	12
FMCBES-130-19	801467	19	134 W	150	100	18
FMCBES-130-24	801470	24	134 W	143	95	18

NOTE: Thermal Capacity and Overhung Load data is based upon 50% clutch and 50% brake usage.

Model Number	Product Number	Foot Mount Set (2 Mounts) Product Number	Shipping Wt. (kg)	Input Unit Product Number	Shipping Wt. (kg)
Black Coating:					
FMCBES-110-14	801451	801435	2,2	801434	3
FMCBES-130-19	801466	801427	2,2	801424	3
FMCBES-130-24	801469	801427	2,2	801425	3
Nickel Plating:					
FMCBES-110-14	801452	801454	2,2	801445	3
FMCBES-130-19	801467	801455	2,2	801498	3
FMCBES-130-24	801470	801455	2,2	801499	3

IEC MOTOR/FRAME SELECTION CHART

Use this chart as specification and operational criteria for your application.

KW of Motor	RPM	Frame Number	Motor Shaft (mm)	Clutch-Brake Model Number
0,25	1500	71A	14	FMCBES-110-14
0,37	1000	80	19	FMCBES-130-19
0,37	1500	71B	14	FMCBES-110-14
0,55	1000	80	19	FMCBES-130-19
0,75	1000	90S	24	FMCBES-130-24
0,75	1500	80	19	FMCBES-130-19
1,1	1000	90L	24	FMCBES-130-24
1,1	1500	90S	24	FMCBES-130-24
1,5	1500	90L	24	FMCBES-130-24

TORQUE VS. AIR PRESSURE

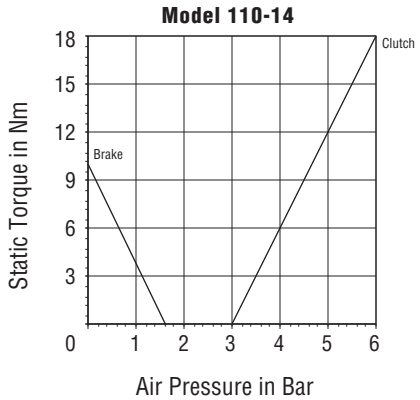

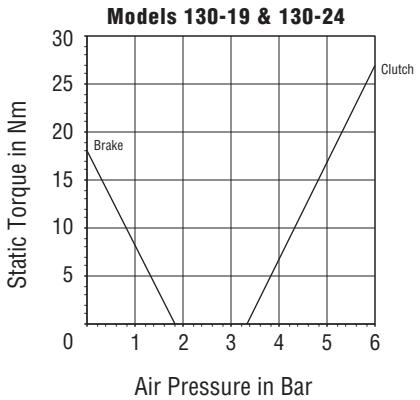

NOTE: Dynamic torque is approximately 85% of static torque.

Torque (In. Lbs.) = Nm x 8.849
PSI = Bar ÷ .0689

METRIC FMCBES MODEL CLUTCH-BRAKES/SPRING ENGAGED BRAKE - APPROXIMATE DIMENSIONS (MILLIMETERS)

Models 110-14, 130-19 & 130-24

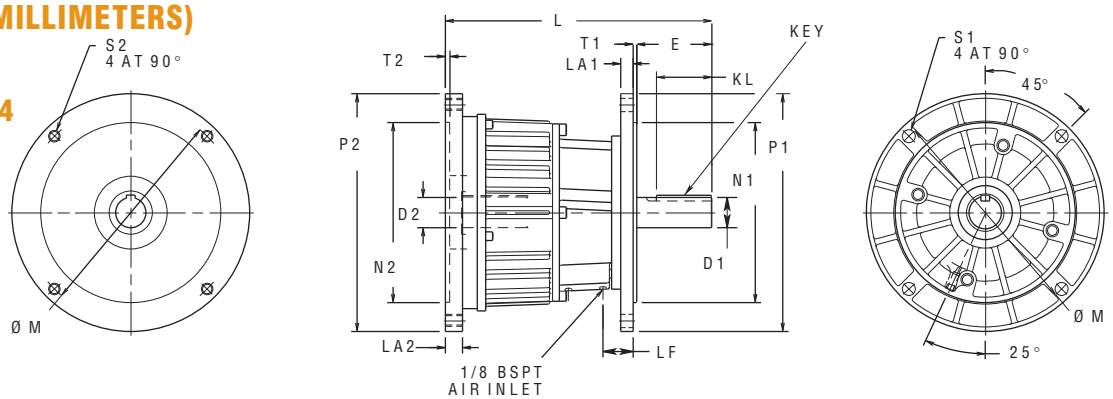

MODEL	FMCBES	FMCBES(NICKEL)	D1	D2	E	KEY	KL	L	LA1	LA2	LF	M	N1j6	N2G7	P1	P2	S1	S2	T1	T2
110-14	801451	801452	14j6	14G7	27	5SQ	25	161,5	8	6	23	130	110	110	150	150	10	M8	3,5	4
130-19	801466	801467	19j6	19G7	37	6SQ	27	210,5	10	11	27	165	130	130	200	198	12	M10	3,5	5
130-24	801469	801470	24j6	24G7	47	7x8	35	220,5	10	11	27	165	130	130	200	198	12	M10	3,5	5

Models 110-14, 130-19 & 130-24 with Input

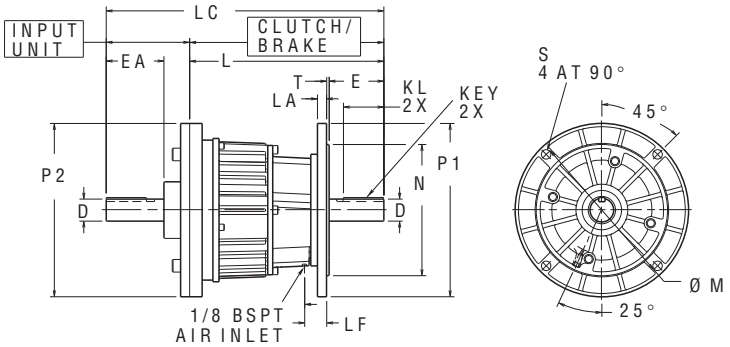

MODEL	FMCBES	FMCBES(NICKEL)	D1	E	EA	KEY	KL	L	LA	LC	LF	M	N1j6	P1	P2	S1	T
110-14	801451	801452	14j6	27	29	5SQ	25	161,5	8	211,5	23	130	110	150	150	10	3,5
130-19	801466	801467	19j6	37	43	6SQ	27	210,5	10	280,5	27	165	130	200	198	12	3,5
130-24	801469	801470	24j6	47	55	7x8	35	220,5	10	302,5	27	165	130	200	198	12	3,5

Models 110-14 with Input & Foot

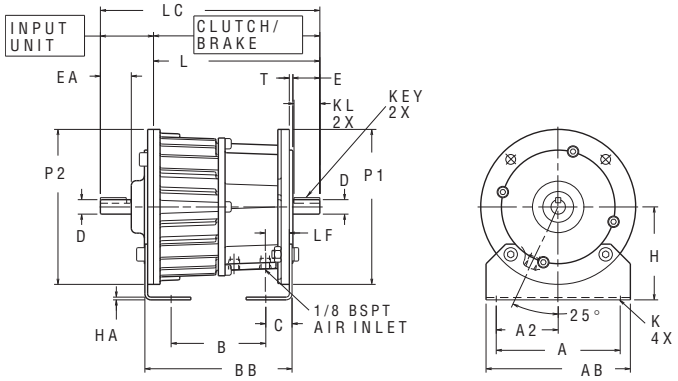

Models 130-19 & 130-24 with Input & Foot

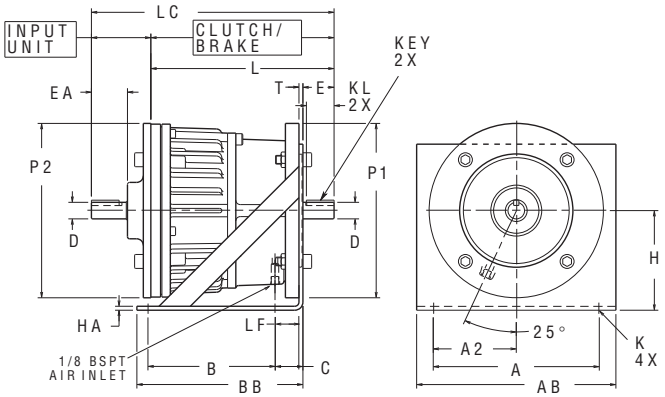

MODEL	FMCBES	FMCBES(NICKEL)	INPUT(BLK)	INPUT(NICKEL)	FOOT(BLK)	FOOT(NICKEL)	A	AB	AZ	B	BB	C	Dj6	E	EA	H
110-14	801451	801452	801434	801445	801435	801454	120	140	60	92	142	25	14	27	29	90
130-19	801466	801467	801424	801498	801427	801455	191	229	95	146	191	32	19	37	43	114
130-24	801469	801470	801425	801499	801427	801455	191	229	95	146	191	32	24	47	55	114

MODEL	HA	K	KEY	KL	L	LC	LF	P1	P2	T
110-14	3	9X19	5SQ	25	161,5	221,5	23	150	150	3,5
130-19	5	11	6SQ	27	210,5	280,5	27	200	198	3,5
130-24	5	11	7x8	35	220,5	302,5	27	200	198	3,5

NOTE: Drawings are expressed in third angle projection.

METRIC FMCBES CLUTCH-BRAKES – MODELS 7-28 & 7-38

FMCBE Flange Mounted Clutch-Brakes are designed for controlled starts and stops in hostile, dirty environments. Totally enclosed design prevents contaminants from interfering with operation of the units while keeping worn friction material from escaping into the environment. Choose from **2 Models**:

- **Bore sizes** range from 28 to 38 millimeters
- All units available in either electroless nickel plating or black oxide coating
- Meets NEMA standard 1.26.5 for waterproof machines
- Static Torque up to 46 Nm (brake) and 64 Nm (clutch)
- Overhung Load Capacity up to 180 kilograms
- Design Speed up to 1500 rpm. Consult factory for higher speed
- Flange mounts directly to motors and reducers
- Compatible with IEC-B5 face motors up to 5,5 KW
- Optional Foot Mount is available for belt drive applications
- Optional Input Unit allows you to incorporate pulleys or coupling into your application
- For additional corrosion protection, contact the factory

Metric FMCBES Clutch-Brakes, Enclosed Design - Spring Engaged Brake

Standard Clutch-Brake is Flange Mounted. Order Foot Mount separately for belt drive applications. Order Input Unit to incorporate pulleys into your application.

Model Number	Product Number	Shaft/Bore (mm)	Thermal Capacity Up To	Overhung Load Capacity (kg) 1000 RPM	Overhung Load Capacity (kg) 1500 RPM	Shipping Wt. (kg)
Black Coating:						
FMCBES-7-28	801472	28	246 W	143	95	28
FMCBES-7-38	801475	38	246 W	180	120	28
Nickel Plating:						
FMCBES-7-28	801473	28	246 W	143	95	28
FMCBES-7-38	801476	38	246 W	180	120	28

NOTE: Thermal Capacity and Overhung Load data is based upon 50% clutch and 50% brake usage.

Model Number	Product Number	Foot Mount Set (2 Mounts) Product Number	Shipping Wt. (kg)	Input Unit Product Number	Shipping Wt. (kg)
Black Coating:					
FMCBES-7-28	801472	801432	1,5	801627	5
FMCBES-7-38	801475	801433	1,5	801628	5
Nickel Plating:					
FMCBES-7-28	801473	801458	1,5	801575	5
FMCBES-7-38	801476	801460	1,5	801608	5

IEC Motor/Frame Selection Chart

Use this chart as specification and operational criteria for your application.

KW of Motor	RPM	Frame Number	Motor Shaft (mm)	Clutch-Brake Model Number
1,5	1000	100L	28	FMCBES-7-28
2,2	1000	112M	28	FMCBES-7-28
2,2	1500	100L	28	FMCBES-7-28
3,0	1000	132S	38	FMCBES-7-38
3,0	1500	100L	28	FMCBES-7-28
4,0	1500	112M	28	FMCBES-7-28
5,5	1500	132S	38	FMCBES-7-38

Torque Vs. Air Pressure

Models 7-28 & 7-38

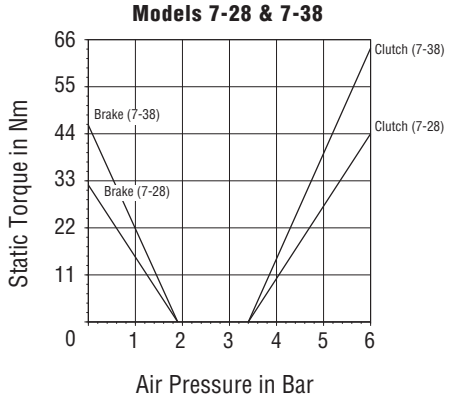

NOTE: Dynamic torque is approximately 85% of static torque.

Torque (In. Lbs.) = Nm x 8.849
PSI = Bar ÷ .0689

METRIC FMCBES MODEL CLUTCH-BRAKES/SPRING ENGAGED BRAKE - APPROXIMATE DIMENSIONS (MILLIMETERS)

Models 7-28 & 7-38

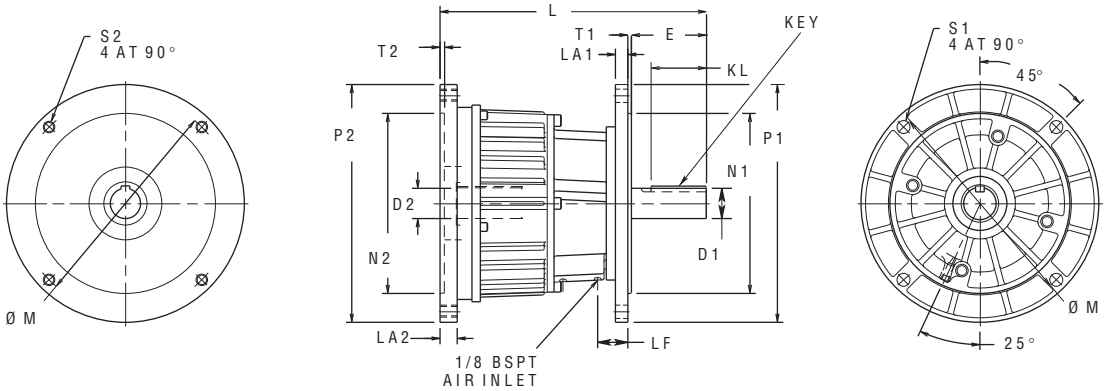

MODEL	FMCBES	FMCBES(NICKEL)	D1	D2	E	KEY	KL	L	LA1	LA2	LF	M	N1^{j6}	N2^{G7}	P1	P2	S1	S2	T1	T2
7-28	801472	801473	28^{j6}	28^{G7}	57	7X8	44	273	13	16	36	215	180	180	250	244	14,5	M12	4	6
7-38	801475	801476	38^{k6}	38^{F7}	77	8X10	51	300	14	21	36	265	230	230	300	300	14,5	M12	4	5

Models 7-28 & 7-38 with Input

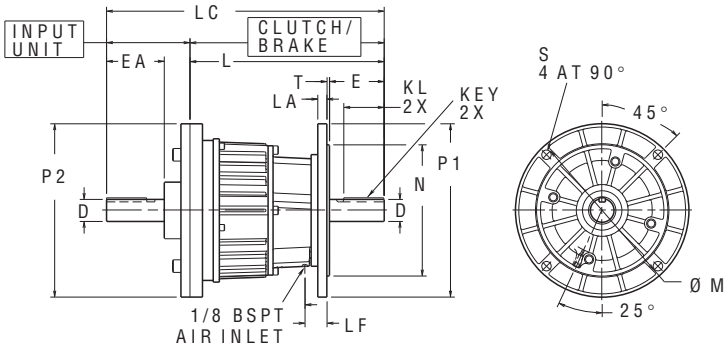

MODEL	FMCBES	FMCBES(NICKEL)	D1	E	EA	KEY	KL	L	LA	LC	LF	M	N1^{j6}	P1	P2	S1	T
7-28	801472	801473	28^{j6}	57	60	7X8	44	273	13	375	36	215	180	200	244	14,5	4
7-38	801475	801476	38^{k6}	77	80	8X10	51	300	14	416	36	265	230	250	300	14,5	4

Models 7-28 & 7-38 with Input & Foot

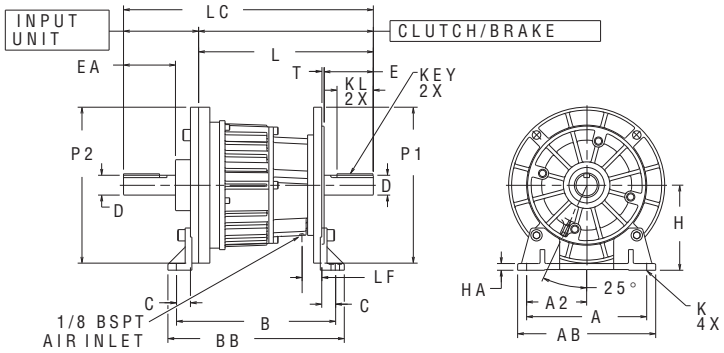

MODEL	FMCBES	FMCBES(NICKEL)	INPUT(BLK)	INPUT(NICKEL)	FOOT(BLK)	FOOT(NICKEL)	A	AB	AZ	B	BB	C	D^{j6}	E	EA	H
7-28	801472	801473	801627	801575	801632	801458	254	292	127	275	301	25	28	57	60	130
7-38	801475	801476	801628	801608	801633	801460	254	292	127	283	315	25	38	77	80	155

MODEL	HA	K	KEY	KL	L	LC	LF	P1	P2	T
7-28	14	14	7X8	44	273	375	36	250	244	4
7-38	14	18	8X10	51	300	416	36	300	300	4

NOTE: Drawings are expressed in third angle projection.

METRIC FMCBES CLUTCH-BRAKES – MODELS 8-38 & 8-42

FMCBE Flange Mounted Clutch-Brakes are designed for controlled starts and stops in hostile, dirty environments. Totally enclosed design prevents contaminants from interfering with operation of the units while keeping worn friction material from escaping into the environment. Choose from **2 Models**:

- **Bore sizes** range from 38 to 42 millimeters
- All units available in either electroless nickel plating or black oxide coating
- Meets NEMA standard 1.26.5 for waterproof machines
- Static Torque up to 103 Nm (brake) and 104 Nm (clutch)
- Overhung Load Capacity up to 200 kilograms
- Design Speed up to 1500 rpm. Consult factory for higher speed
- Flange mounts directly to motors and reducers
- Compatible with IEC-B5 face motors up to 11 KW
- Optional Foot Mount is available for belt drive applications
- Optional Input Unit allows you to incorporate pulleys or coupling into your application
- For additional corrosion protection, contact the factory

Metric FMCBES Clutch-Brakes, Enclosed Design - Spring Engaged Brake

Standard Clutch-Brake is Flange Mounted. Order Foot Mount separately for belt drive applications. Order Input Unit to incorporate pulleys into your application.

Model Number	Product Number	Shaft/Bore (mm)	Thermal Capacity Up To	Overhung Load Capacity (kg) 1000 RPM	Overhung Load Capacity (kg) 1500 RPM	Shipping Wt. (kg)
Black Coating:						
FMCBES-8-38	801478	38	328 W	195	130	70
FMCBES-8-42	801481	42	328 W	200	135	70
Nickel Plating:						
FMCBES-8-38	801479	38	328 W	195	130	70
FMCBES-8-42	801482	42	328 W	200	135	70

NOTE: Thermal Capacity and Overhung Load data is based upon 50% clutch and 50% brake usage.

Model Number	Product Number	Foot Mount Set (2 Mounts) Product Number	Shipping Wt. (kg)	Input Unit Product Number	Shipping Wt. (kg)
Black Coating:					
FMCBES-8-38	801478	801633	5	801629	6
FMCBES-8-42	801481	801634	5	801630	6
Nickel Plating:					
FMCBES-8-38	801479	801460	5	801601	6
FMCBES-8-42	801482	801463	5	801602	6

IEC Motor/Frame Selection Chart

Use this chart as specification and operational criteria for your application.

KW of Motor	RPM	Frame Number	Motor Shaft (mm)	Clutch-Brake Model Number
4,0	1000	132M	38	FMCBES-8-38
5,5	1000	132M	38	FMCBES-8-38
7,5	1000	160M	42	FMCBES-8-42
7,5	1500	132M	38	FMCBES-8-38
11	1500	160M	42	FMCBES-8-42

Torque Vs. Air Pressure

Models 8-38 & 8-42

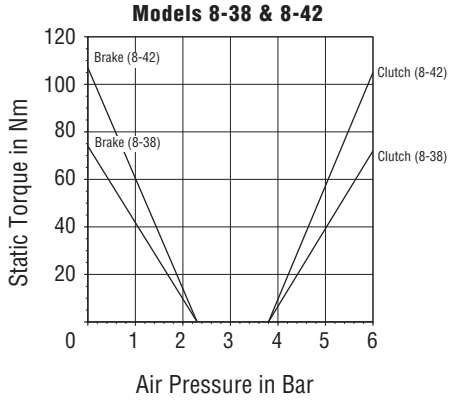

NOTE: Dynamic torque is approximately 85% of static torque.

Torque (In. Lbs.) = Nm x 8.849
PSI = Bar ÷ .0689

METRIC FMCBES MODEL CLUTCH-BRAKES/SPRING ENGAGED BRAKE - APPROXIMATE DIMENSIONS (MILLIMETERS)

Models 8-38 & 8-42

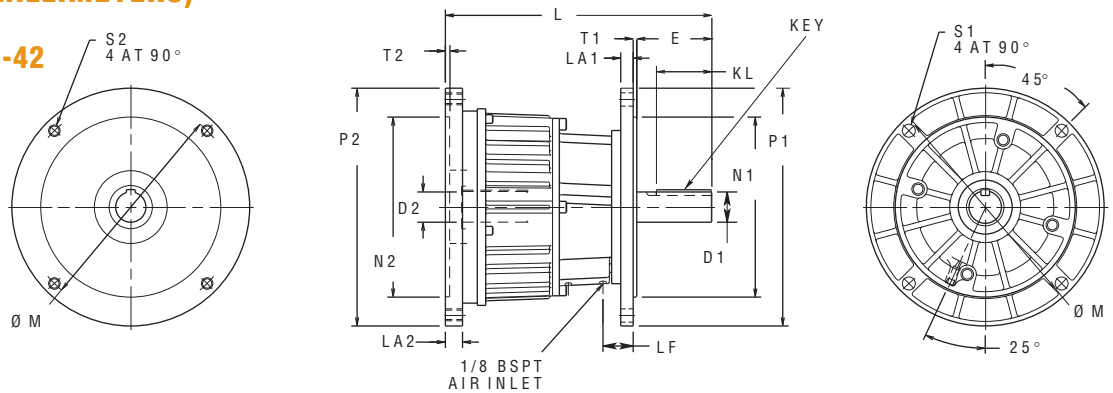

MODEL	FMCBES	FMCBES(NICKEL)	D1	D2	E	KEY	KL	L	LA1	LA2	LF	M	N1^{j6}	N2^{G7}	P1	P2	S1	S2	T1	T2
8-38	801478	801479	38^{k6}	38^{F7}	77	8X10	51	314	12	21	36	265	230	230	300	300	14,5	M12	4	5
8-42	801481	801482	42^{k6}	42^{F7}	105	8X12	76	375	17	28	42	300	250	250	330	330	18,5	M16	5	5

Models 8-38 & 8-42 with Input

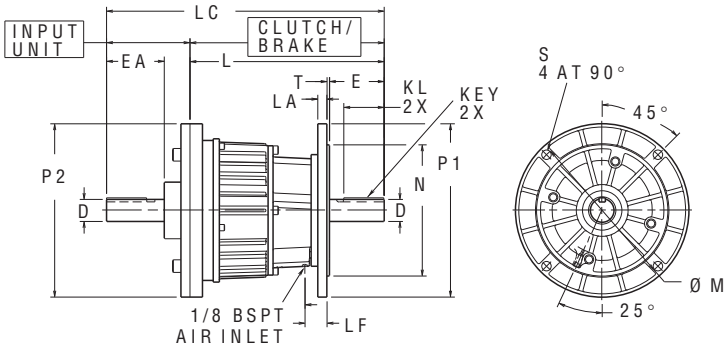

MODEL	FMCBES	FMCBES(NICKEL)	D1	E	EA	KEY	KL	L	LA	LC	LF	M	N1^{j6}	P1	P2	S1	T
8-38	801478	801479	11^{k6}	77	80	8X10	51	314	12	444	36	265	230	300	300	14,5	4
8-42	801481	801482	42^{k6}	105	110	8X12	76	375	17	534	42	300	250	330	330	18,5	5

Models 8-38 & 8-42 with Input & Foot

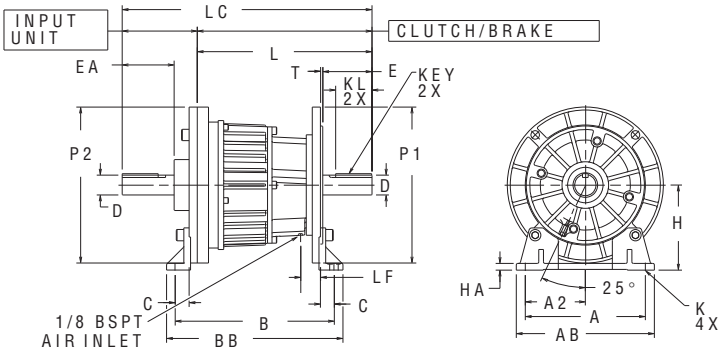

MODEL	FMCBES	FMCBES(NICKEL)	INPUT(BLK)	INPUT(NICKEL)	FOOT(BLK)	FOOT(NICKEL)	A	AB	AZ	B	BB	C	D^{j6}	E	EA	H
8-38	801478	801479	801629	801601	801633	801460	254	292	127	296	327	25	38	77	80	40
8-42	801481	801482	801630	801602	801634	801463	254	292	127	341	378	29	42	105	55	110

MODEL	HA	K	KEY	KL	L	LC	LF	P1	P2	T
8-38	14	14	8X10	51	314	444	36	300	300	4
8-42	14	18	8X12	75	375	534	42	330	330	5

NOTE: Drawings are expressed in third angle projection.

In accordance with Nexen's established policy of constant product improvement, the specifications contained in this document are subject to change without notice. Technical data listed in this document are based on the latest information available at the time of printing and are also subject to change without notice. For current information, please consult:
www.nexengroup.com

TENSION CONTROLS

This Section Contains: . . . . .Page

TENSION CONTROL SYSTEMS

RSTC 1000 Tension Controller 294
TC 820 Tension Controller 295-296
MB Series Tension Sensors 297-301
Sidewall Mount Tension Sensor 302-303
Electro-Pneumatic Converters 304-306
Auxiliary Pneumatic Controls 307
TCD 600 Diameter Tension Controller . .308-309
Dancer Control System 310
Digital Dancer Controller
RSD100, RSD100P 311
Digital Dancer Controller
RSD200, RSD200P 311
Dancer Control System Power Supply 311
RSD250 Unwind Dancer Package . . .312-313
Dancer Sensors DPS30 & DPS60 313
TA 100/TA 110 Tension Amplifiers . . .314-315
SC100 Signal Conditioner 316
TM 210 Tension Meter 317

RSTC1000 Tension Controller

Nexen's RSTC1000 Tension Controller is a closed loop, load cell based tension control product which uses torque to control the tension of paper, film, foil, or fabric in all zones of web processing machines.

The RSTC1000 uses an adaptive control algorithm to adjust internal gain values, resulting in a simple system with the inherent robustness of more complicated systems that rely on many external sensors and signals.

The RSTC1000 can be DIN rack mounted or panel mounted inside a machine control cabinet alongside other controllers. Using Modbus RTU communication protocol, the RSTC1000 can communicate with HMIs and PLCs. For machines without HMI, the RSTC Operator Panel (ROP) is available and can be installed in a convenient location for the operator.

Features and benefits

- Tune once, then forget
- Smart Splicing — splice different size rolls without adjustment
- RSTC1000 controls the torque output of brakes, clutches, and AC/DC drives
- Controller setup and tuning are performed at initial start-up from a customer's PC or HMI
- RSTC utilizes an adaptive control algorithm
- Software to set, tune and diagnose the RSTC is downloadable from the Nexen website
- ROP can be mounted anywhere on the machine
- RSTC1000 and ROP are CE compliant
- The ROP has a text display with no menus, therefore, operators do not have to navigate menu structures or decode cryptic messages
- Each control on the ROP has only one function, simplifying operator training and use
- ROP supports easy storage and retrieval of parameters for frequently run jobs
- The ROP adjusts job parameters only, so operators cannot modify controller setup or tuning parameters
- Power supply, +24 VDC

Product Part Numbers

964523	RSTC1000
964537	RSTC Operator Panel (ROP) English - Spanish
964538	RSTC Operator Panel (ROP) English - French
964539	RSTC Operator Panel (ROP) English - German
964540	RSTC Operator Panel (ROP) English - Italian

Specifications

POWER	24VDC @ 500mA
OPERATING TEMPERATURE	
RSTC 1000	0° - 60° C (32° - 140° F)
RSTC Operator Panel	0° - 45° C (32° - 113° F)
DIGITAL SIGNALS	
Alarm Outputs	5-24 VDC, 140 mA sinking currrent
Control Inputs	12 - 24 VDC, 20 mA Max
ANALOG SIGNALS	
Diameter Sensor Input	0 - 12 VDC Max
Load Cell Inputs	2 channels, 0-1 VDC
Control Output 1	0 - 10 VDC, 4-20 mA
Control Output 2	0 - 10 VDC, 4-20 mA
SENSOR EXCITATION	
Load Cell	6 VDC
Diameter Sensor	12 VDC & 24 VDC @100 mA Max

MOBUS RTU COMMUNICATIONS	
Network Address Range	1-247
Baud Rates	4800, 9600, 14400, 19200, 38400, or 56,000
Parity	None, Odd, Even
Stop Bits	1 (Odd or Even Parity) 2 (No Parity)

TC 820 Tension Controller

Nexen's TC 820 Tension Controller is the central component of a closed loop tension control system that includes the controller, tension sensors, external controls and indicators and a clutch, brake or drive. The system maintains uniform web tension in machinery that prints or converts web materials including paper, film, foil, cellophane, textiles, non-wovens, metal strip and rubber.

Features and benefits

- Both 4-20 mA and 0-10 VDC outputs in one unit—one controller for all your needs. Interface with pneumatic, hydraulic or electric clutches, brakes or drives.
- Simple to setup, calibrate and operate—no need for costly external technicians.
- Calibration lockout circuitry is standard— prevents unauthorized calibration changes.
- Affordable—easy to justify cost.
- Digital tension display—easy to read.
- Tension selection at the push of a button—easy to operate.
- Remote tension inputs—Set tensions directly from external sources. (PC's, PLC's)
- 16 LED control output display—keeps operator informed.
- Operates using LVDT or strain gauge tension sensor signals—one controller for all sensors.
- CE marking—usable in European community.
- Set up and calibration from central control panel—ease of set up and calibration.

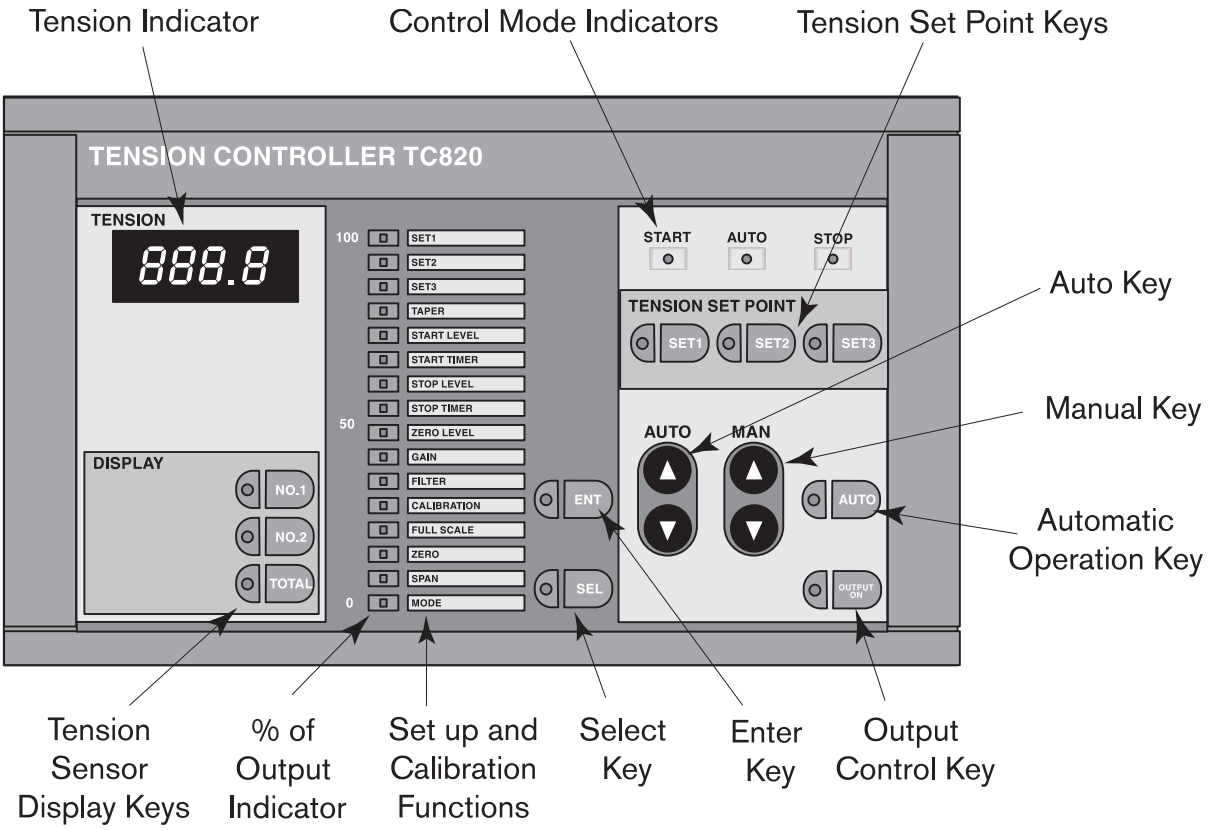

How the TC820 Tension Controller works.

The TC 820 Tension Controller receives an input signal from one or two Nexen tension sensors. These sensors can be LVDT or strain gauge-type sensors. The controller amplifies and adds both these signal values together. The sum of these combined signals is then compared to the desired setpoint tension level. The difference between these two signals is the "deviation." The TC 820 reduces the deviation to zero by increasing or decreasing the output signal.

Two tension sensors are normally placed one on either end of a sensing roll. This eliminates errors caused by a difference in tension from one side of the web to the other. Narrow web sensing can be done using only one sensor.

You choose whether the output signal is 4-20, mA, or 0-10 VDC depending on the needs of the interface element. The 4-20 mA signal is used with the Nexen Electro-Pneumatic Converters, which vary output air pressure in direct relation to the variable input signal from the TC 820. This output air pressure can be used to actuate a pneumatic brake, clutch or motor. The 4-20 mA or 0-10 VDC output signal can interface with variable speed motors, controllers, or other elements such as the power supply for electric brakes or clutches.

Applications

Unwind Control

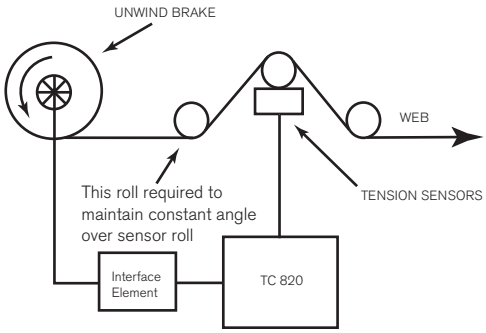

Center Wind Drive Control

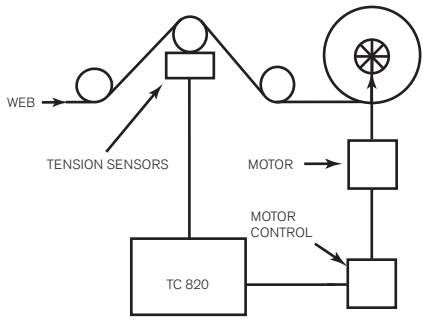

Center Wind Clutch Control

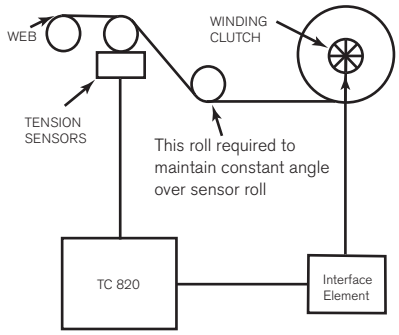

Mid-process Control

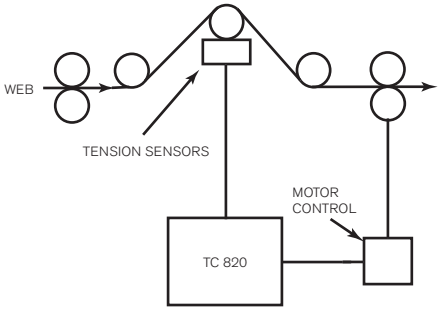

Dimensions

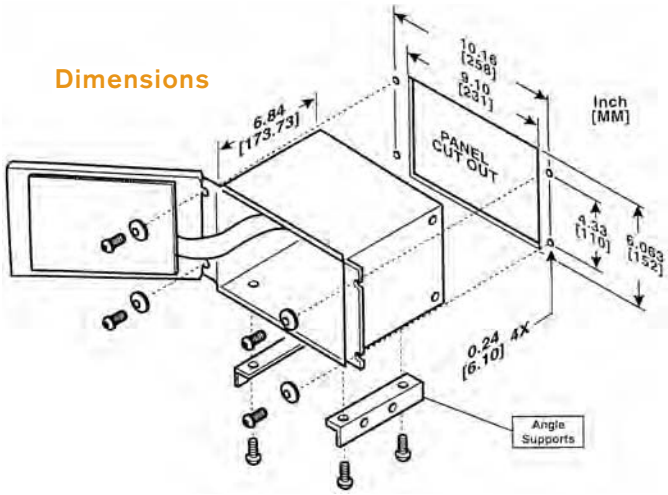

Selection Chart

PRODUCT NUMBER	964350
TENSION RANGE SETTINGS	0.5 – 5000 (Pounds, Newtons or Kilograms)
POWER SUPPLY	100-240 V AC, 50/60 Hz
POWER CONSUMPTION	100 VA
AMBIENT TEMPERATURE	32-122° F (0-50° C)
SHIPPING WT.	8.0 lbs. (3,6 kg)
CONTROL OUTPUT	0-10V (<2 mA) 4-20 mA (<500Ω)
PROPORTIONAL TENSION SIGNAL	0-10 VDC 0-1 mA
SYSTEM ACCURACY	Same as sensor accuracy

INPUTS	Sensor Input	MB or SW tension sensors
	External tension setpoint Input*	0 to 10 VDC (input impedance: 200kΩ)
CUSTOMER SUPPLIED INPUTS	Auto trigger	Maintained contact, rated at (30 VDC, <0.2Ω)
	Splicing Contact*	Momentary contact, rated at (30 VDC, <0.2Ω)
OUTPUT	Tension Error Signal*	30V DC 0.2A or 100V AC 0.2A (resistance load)

**Special features not required for typical applications. Use as necessary.*

MB SERIES TENSION SENSORS

Precise, accurate measurement of web tension

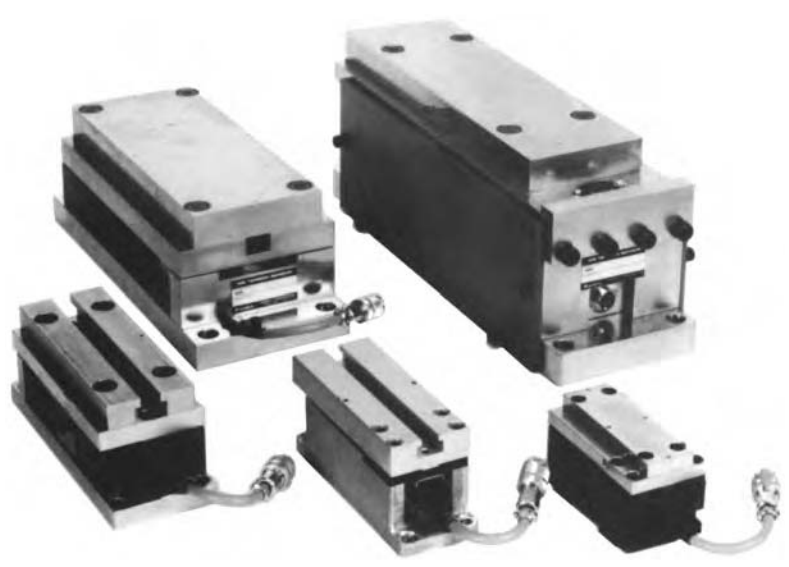

MB Series Tension Sensors

The MB Series of load cells uses an LVDT type sensor to convert tension into a proportional electrical signal. The LVDT system provides precise, accurate tension measurement while the mechanical design allows for extremely high overloads without damage to the unit.

Features

- Extremely accurate LVDT type sensor
- Mountable at any angle
- Suitable for either symmetrical or asymmetrical web path angles
- Capable of taking extreme overloads without structural damage or loss of calibration
- Simplified mechanical structure
- No calibration or maintenance required

Function

As web tension increases, the resultant force F (see Figure 1) also increases. This causes the load plate to rotate minutely around the pivot point. This pivot point is a torsion bar which resists the force F. Due to leverage advantage, actual sensing roll movement is quite small. Movement of the core in the LVDT is proportionately larger, as the core moves within the LVDT coil, the output of the coil varies directly with the core movement, which varies directly with the force F. The output is thus proportional to F.

The mechanical structure of the torsion bar and the mechanical limit stops on the load plate allow the MB Sensors to survive 100-to-1 overloads without structural failure or variance in calibration.

The LVDT housing also contains a high-frequency oscillator circuit which guarantees excellent linearity and a thermal compensating circuit which ensures zero thermal drift when used within the stated temperature range.

Cables

Standard cable (16 ft. [5m]) provided with each sensor. Optional cables listed below, purchased separately.

Part Number	Length
17167	18 in Extension
17168	48 in Extension
2138	16' (5m) Standard
8365	30' (10m)
9428	50' (16m)
9429	75' (25m)
9430	100' (33m)

Figure 1

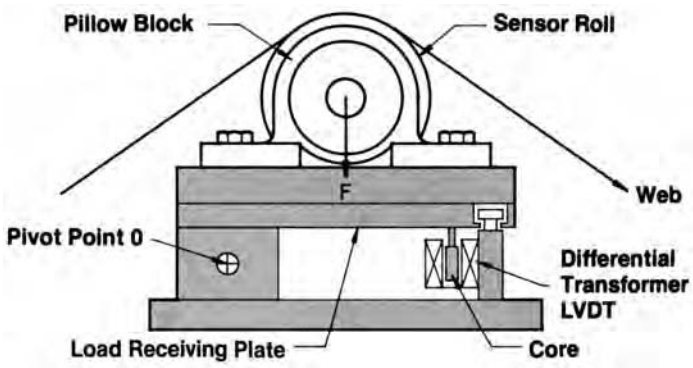

Specifications

PRODUCT NUMBER	912609	912610	911991	911995	911996	911999	911889	912000	911998
Frame Size	MB05B	MB05A	MB11B	MB11A	MB25B	MB25A	MB33B	MB33A	MB41
Load range per sensor									
LB	22	44	22	44	110	220	660	1100	2200
Kg	10	20	10	20	50	100	300	500	1000
Tare per sensor									
LB	11	22	11	22	55	110	330	385	770
Kg	5	10	5	10	25	50	150	175	350
Accuracy	±1%	±1%	±1%	±1%	±1.5%	±1.5%	±1.75%	±1.75%	±1.75%
WEIGHT lb (Kg)	3.3 (1,5)	3.3 (1,5)	1.8 (0,8)	1.8 (0,8)	7.5 (3,4)	7.5 (3,4)	35 (16)	35 (16)	53 (24)
ELECTRICAL DATA	6 VDC Excitation; 0-400 mV return								
TEMPERATURE RANGE	+14° to +140° F (-10° to +60° C)								

MB SERIES TENSION SENSORS

Dimensions MBO5

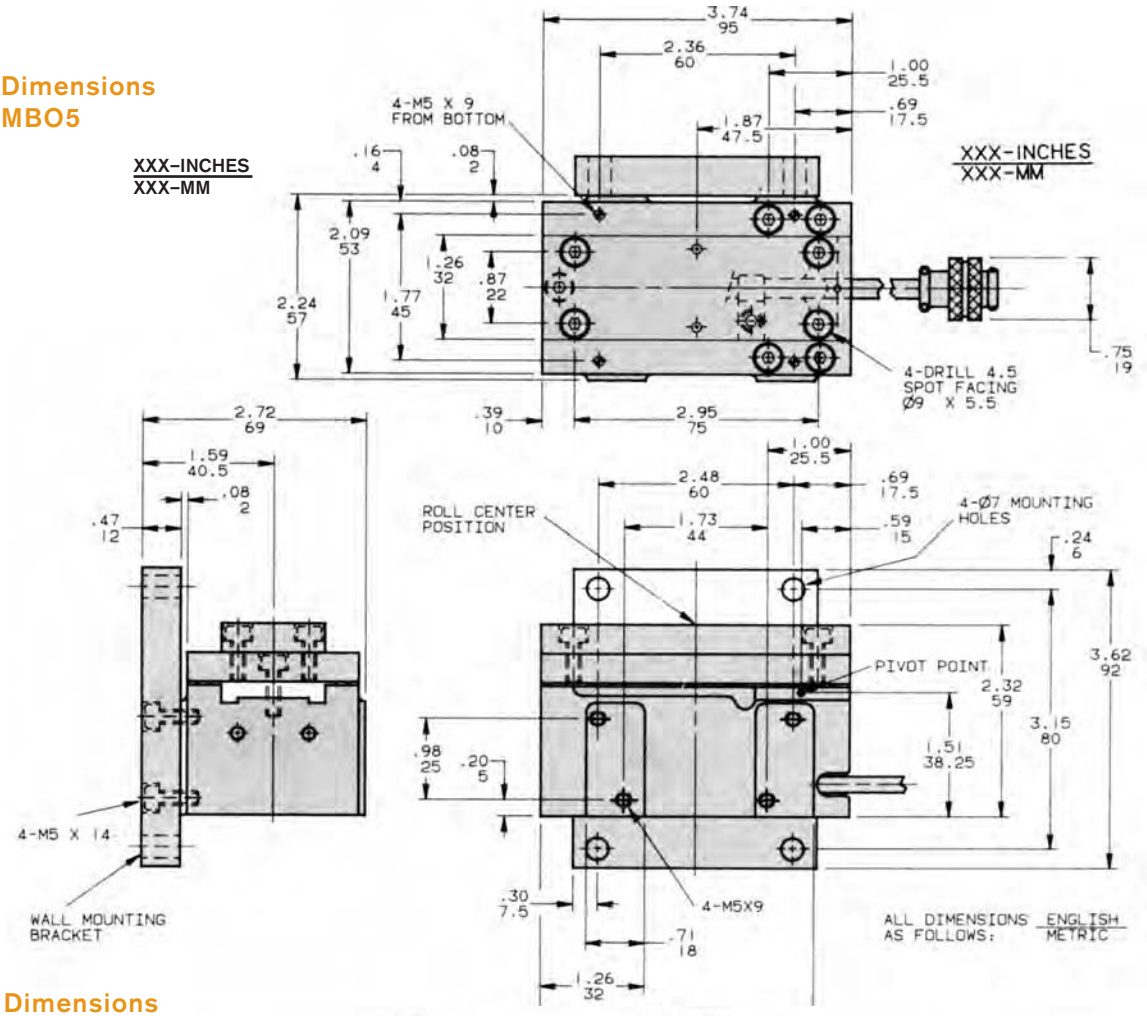

Dimensions MB11

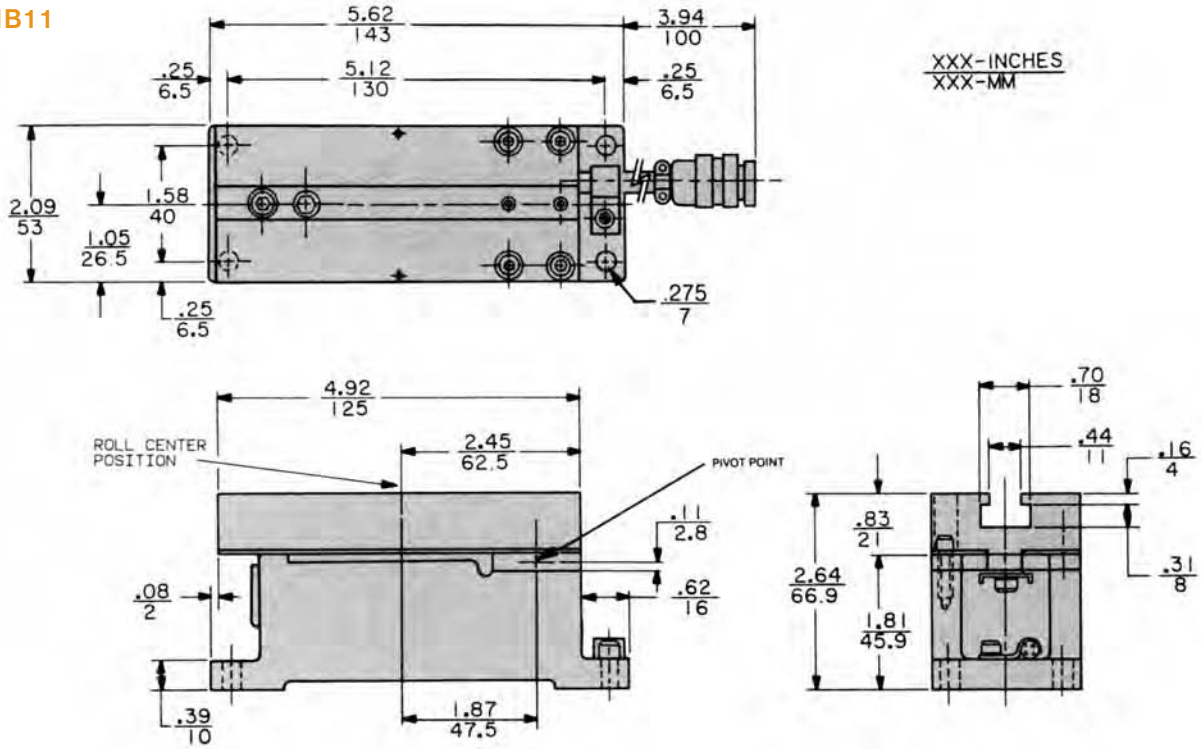

MB SERIES TENSION SENSORS

Precise, accurate measurement of web tension

Dimensions MB25

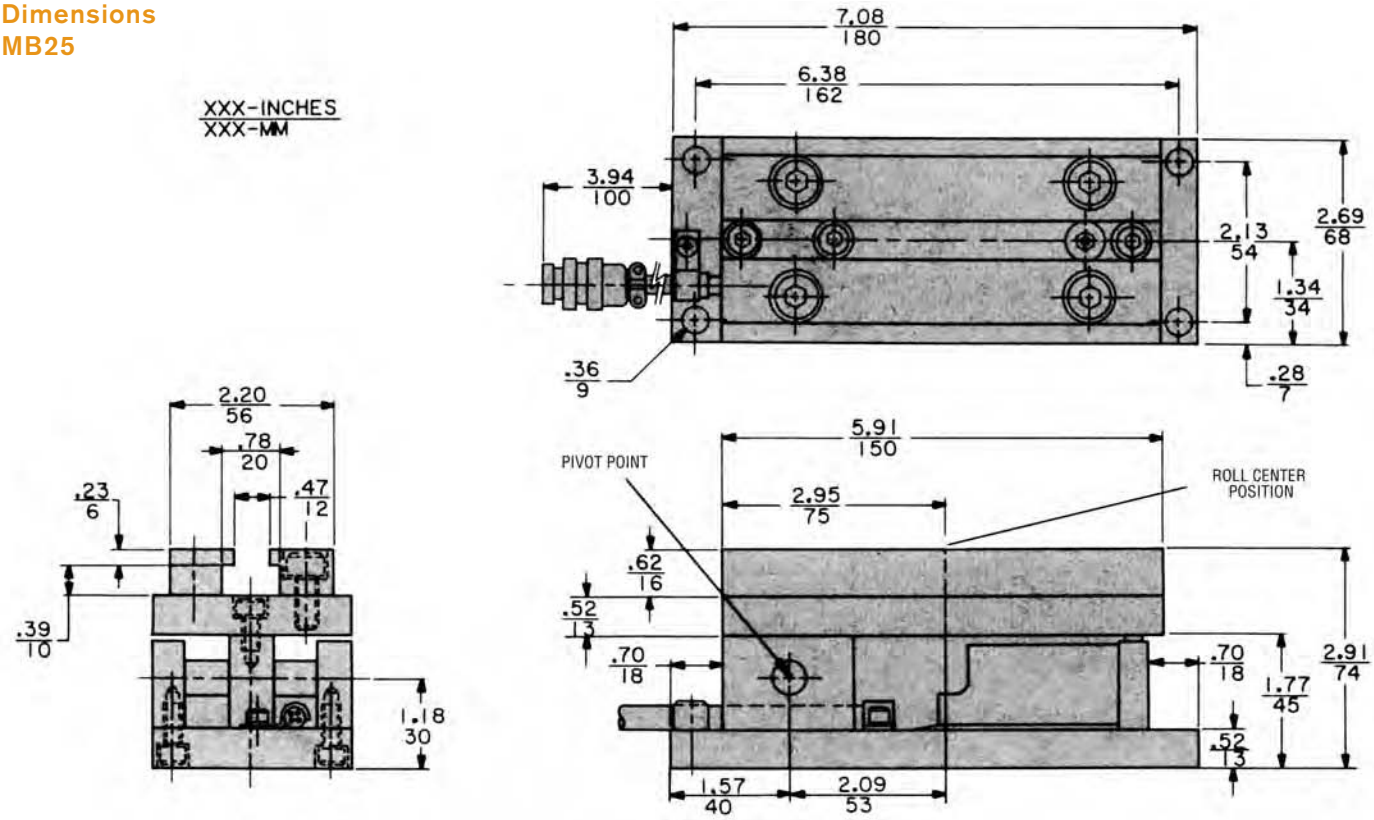

Dimensions MB33

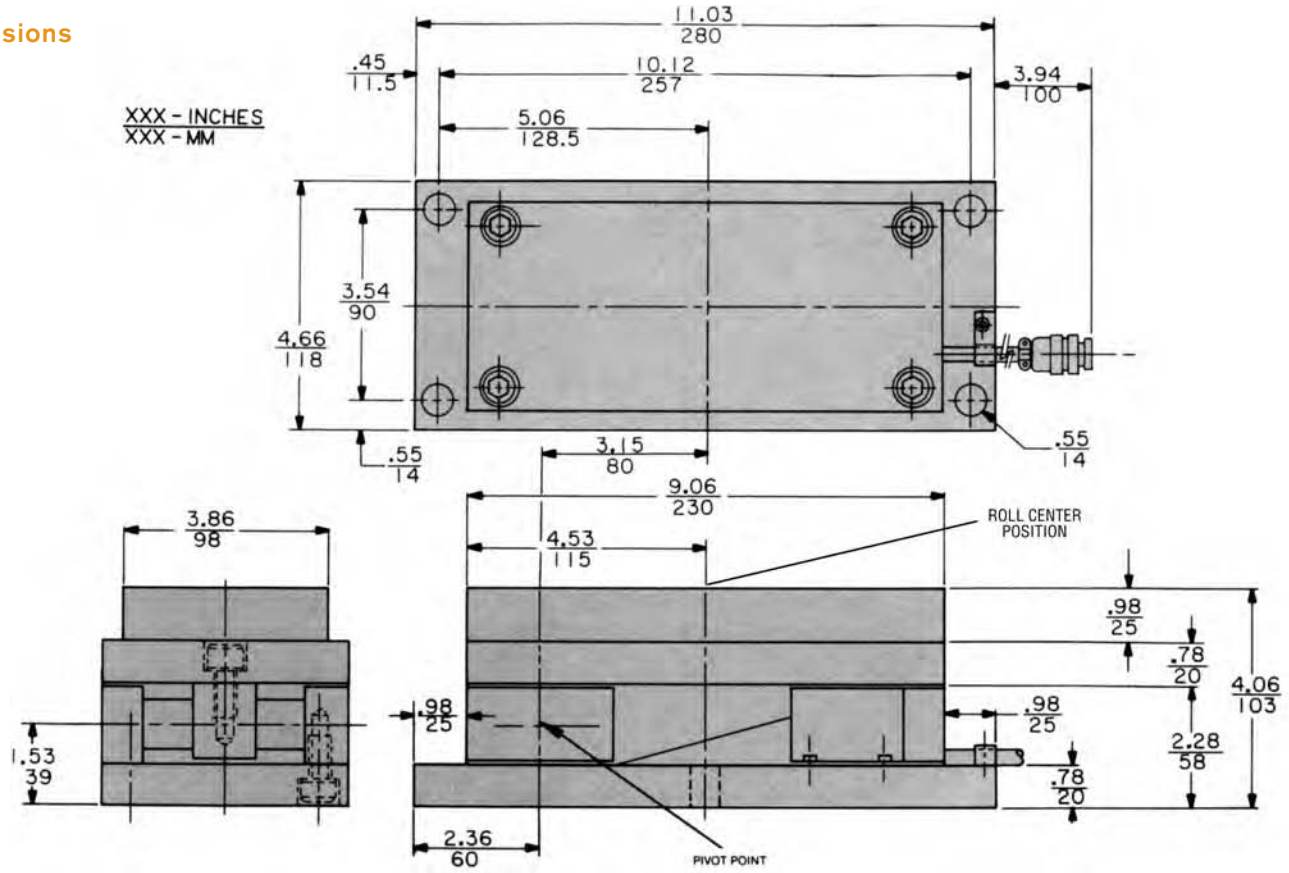

MB SERIES TENSION SENSORS

Dimensions
MB41

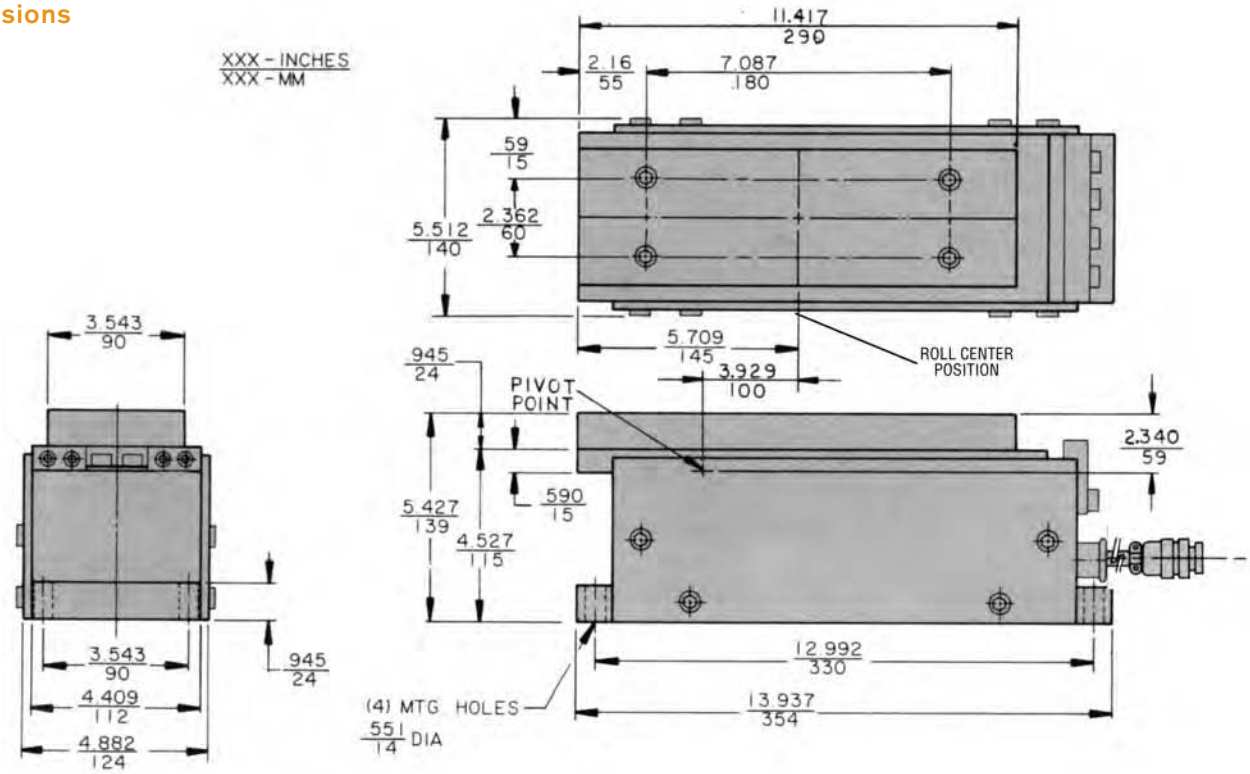

Sizing

Two factors affect Sensor Sizing. The sensor must be able to measure the Force (F) created by the Web Tension (T) wrapping the roll at given angle. The sensor must also support the tare weight of the sensing roll and bearings. These two factors are independent of one another and must be calculated separately.

Force Calculation

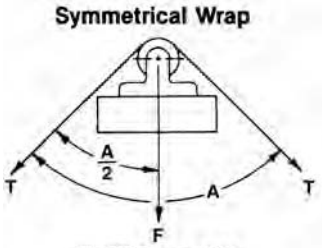

F=2T * cos A/2

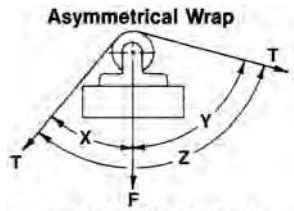

F=(T*cosX) + (T*cosY)

Load range per sensor (see spec. chart next page) is F divided by the number of points supporting the load, i.e. two support points in bilateral, Unilateral or Cantilevered configuration, or one support point in Narrow Web or Wire and Filament configuration. Tare per sensor (see spec. chart next page) is calculated the same way. The tare per sensor is the total weight of the sensor roll and the bearings divided by the number of support points.

Warning

Tare capacity can decrease by up to 50% when sensors are mounted vertically or at an angle (see items B and D under "Sensor Mounting" next page). Reduce tare per sensor rating in spec. chart by 50% or contact the factory.

Contact Nexen or your Nexen distributor or representative if you have any question about sensor sizing.

Installation

Sensor Configuration

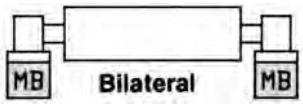

Bilateral - Standard arrangement used on most machines. Sensing tension on both ends provides maximum sensitivity and eliminates sensing errors due to tension variation from edge to edge.

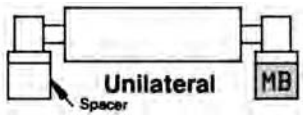

Unilateral - More economical sensing method. Not recommended for webs over 14 inches (355,6mm) wide or on machines where the web is run off center.

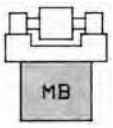

Narrow Web - Useful on narrow web machines. Should not be used where roll face exceeds six inches.

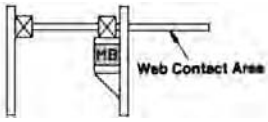

Cantilevered Rolls - MB Sensor mounted on support bracket to machine frame.

Wire or Filament
- Similar to narrow web style. For tension in excess of 2 lbs. (0,09 kg).

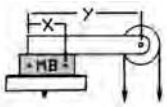

For tensions less than two pounds multiply the force with leverage. F=2T(Y/X)

MB SERIES TENSION SENSORS

Sensor Mounting

Mounting dimensions for the five frame sizes are given on previous pages. Sensors may be mounted at any angle (see Figures A-D).

All sensors include a 16 ft. (5M) cable which may be extended with 18 AWG 4 conductor shielded cable to as long as 500 ft. (152M). Presized, Extension Cables are also available. (see Page 298).

All sensors must be mounted according to the following guidelines:

1. Flatness must be 0.002" (0.05 mm) over the length of the sensor. This can be achieved by milling of the mounting surface.

NOTE: Any shimming required for sensor roll leveling must be done between sensor and pillow block. Never shim between sensor and sensor mounting surface.

2. Sensor roll span must equal sensor span. This is achieved by securing the sensor to the mounting surface, then the pillow block bearings to the sensors, and finally the bearings to the sensor roll shaft (see Fig. E).

3. When sensors are mounted to a base of material different than that of the sensor roll, i.e. aluminum roll, steel mounting base; secure only one pillow block bearing to the roll shaft. This will allow for different rates of thermal expansion (see Fig. E).

4. Mounting surfaces must be parallel. Self centering pillow block bearings are required to take up any variations in parallelism (see Fig. F).

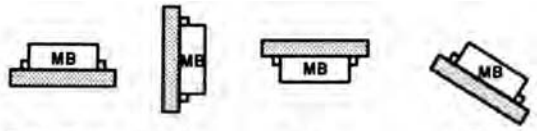

Figure A B C D

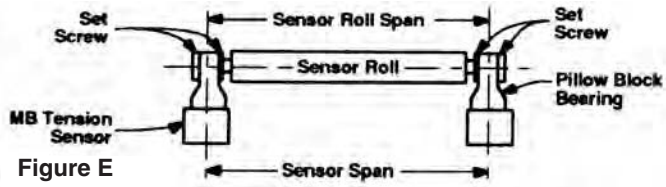

Figure E

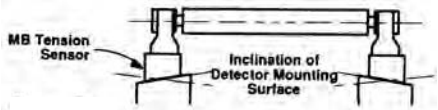

Figure F

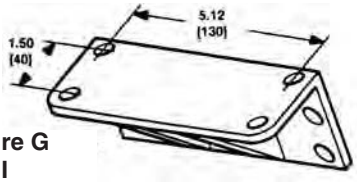

Figure G
MB II

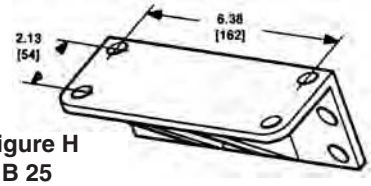

Figure H
MB 25

NOTE: Noncompliance with these conditions will induce heavy side loads within the sensor. This will cause hysteresis, and the sensor will measure mechanical resistance rather than tension load.

MB 05, MB II and MB 25 only

MB05 is normally mounted using the side mounting plate and cap screws provided with the unit.

MB II and MB 25 may be mounted on customer supplied wall mounting brackets . (See figures G & H).

All three sizes may be mounted for either normal or reverse web wrap. The tension induced force (F) is calculated the same in both cases and the allowable load range per sensor (see chart page 3) does not change.

MB 33 and MB 41

Due to the high forces generated by webs needing MB 33 and 41 load cells, reverse wrap is not recommended.

Due to the high forces generated, side wall mounting is not recommended.

Contact Nexen or your Nexen distributor or representative if you have any question about sensor sizing.

Installation

Sensor Location

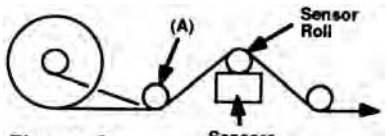

Figures 3

Correct Location

Figure (3) illustrates correct sensor location for winding or unwinding control. One transport roll (A) located between the sensors and roll stand serves to fix the web angle over the sensor roll.

Figure (4) illustrates angular changes as the roll changes diameter during processing.

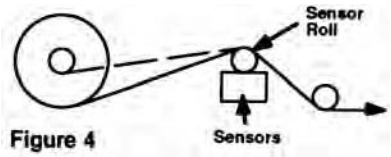

Figure 4

Incorrect Location

These angular changes will cause incorrect readings from the Tension sensors and must be avoided by use of roll (A) (see Fig. 3).

Figure (5) illustrates a common mistake in sensor mounting. In this configuration, the "S" wrap drive will effectively isolate tension into two zones, T_1 and T_2. A nip roll at the same position would provide the same isolation. The roll stand brake or clutch can only control tension in T_1 zone. Since

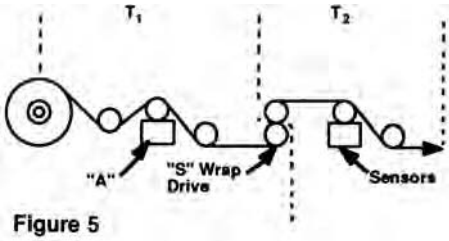

Figure 5

the sensors are mounted in the T_2 zone, they can not sense any tension changes caused by the roll stand and can not be used for closed loop control. The sensors must be moved to position "A" for proper control of the roll stand and T_1 tension.

Contact Nexen or your Nexen distributor or representative if you have any question about sensor sizing.

SIDEWALL MOUNT TENSION SENSOR

Measures web tension in unwind, intermediate and rewind applications

Sidewall mount strain gauges for accurate tension sensing. Nexen's line of sidewall mounting tension sensors measure the web tensions in unwind, intermediate and rewind applications. Use them in applications where sidewall mounting is required in conjunction with Nexen's line of tension controllers.

Features and Benefits

- Accurate tension measurement
  —Provides consistent product quality
- Flexible mounting—For easy installation
- Interfaces with Nexen Tension Controls and Meters
  —For a quality tension control system

Principle of Operation

Diagram of "Twin Beam" Sensor Gauging and Wiring

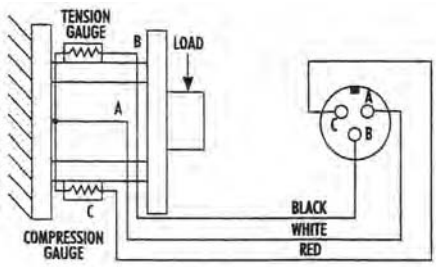

Basic Wiring Diagram to Form a Complete Bridge

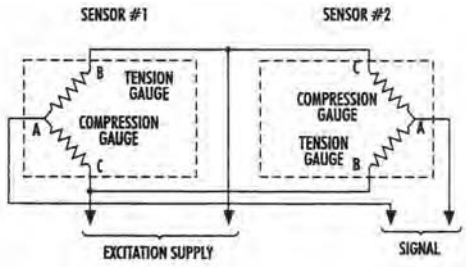

Specifications

Gauge Resistance:	Each sensor contains half a bridge having a nominal resistance of 120 ohms per gauge
Excitation Voltage:	6 VDC or VAC (RMS) maximum
Output Signal at Rated Maximum Force:	250mV nominal per Tension Sensor (1/2 bridge) 500mV nominal per Tension Sensor pair (full bridge)
Operating Temperature Range:	0°F to +200°F (-18° to +93°C)
Sensitivity Change with Temperature:	Less than 0.02%/°F of rated output typical
Humidity:	95% R.H.
Combined Non-linearity and Hysteresis:	±0.5% maximum of rated output
Repeatability:	±0.2% maximum of rated output
Non-destructive Overload Rating:	150% of force
Ultimate Overload Rating:	300% of force typical
"MS" Connectors:	MS-3102A-10SL-3P (3-Pin Connector)
Cable:	16 foot (5 meters) cable included
Input Impedance Required: (Sensor Signal Amplifier it not supplied)	5K ohms per Tension Sensor (1/2 bridge) 10K ohms per pair (full bridge)
Output Impedance:	Approximately 850 ohms per Tension Sensor at 25°C (1/2 bridge) or 1700 ohms per pair (full bridge)
Weight:	3.4 lbs. (1.5 kg) each

All data subject to change without notice.

SIDEWALL MOUNT TENSION SENSOR

Measures web tension in unwind, intermediate and rewind applications

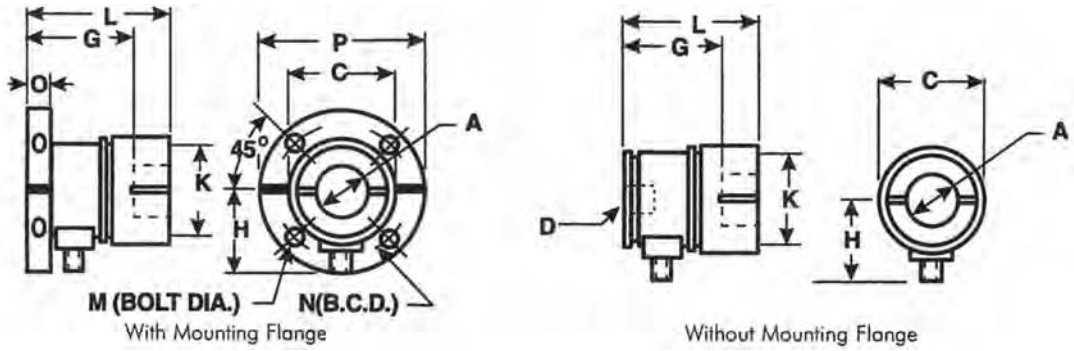

Dimensions

	A	C	D	G	H	K	L	M	N	O	P
WITH FLANGE	1.25 [31,8]	1.95 [49,5]	Not used Not used	2.61 [66,2]	1.77 [45]	2.26 [57,2]	3.18 [80,7]	.4025 [10,3]	3.25 [82,5]	0.59 [14,9]	4.00 101,6
WITHOUT FLANGE	1.25 [31,8]	1.95 [49,5]	1/2-13 x 0.55DP [12,7]-13 x [14]DP	2.45 [62,2]	1.77 [45]	2.26 [57,2]	3.02 [76,7]		Not used Not used		

Notes: • All dimensions shown in inches. [mm] • Allow 2-1/2 inches [63.5] clearance for connector. • Maximum roller shaft length = distance between sidewalls - (2x G)

Selection Chart

Sensor

Force (lbs)	(N)	Product Number
25	111	803351
50	222	803352
75	334	803353
100	445	803354
150	667	803355
200	890	803356

Cables

Standard Cable

Provided with each sensor 16 foot [5m]		Product Number 30518
Optional Cables		
Length (ft.)	(M)	Product Number
25	7,6	15596
30	9,1	15869
50	15,2	15870

Installation

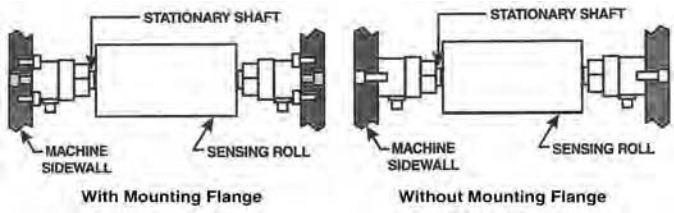

Selection of Force Rating

The proper sensor force rating for any application is calculated using known values for maximum web tension, wrap angle and idler roll weight. To calculate the force rating, first select the appropriate wrap configuration, 1, 2 or 3. Then calculate the force using the formula for that wrap configuration.

These formulas allow for a tension transient of 2 times the average tension. Thus, in some cases, it may be appropriate to use a sensor pair with a force rating slightly less than the calculated net force.

In some applications, a transducer roll can be so heavy that its weight takes up the operating range weight of the sensors. If this happens, it may not be possible to zero the tension when the transducer roll is unloaded. This is caused by exceeding the adjustment range of the tension controller or meter.

To determine if your idler roll is too heavy, compare the force rating with the effective weight of the roll using this formula: If W COS (A) is more than 95% of the force rating selected, the tension meter or controller cannot be adjusted to zero. If this is the case, one or more of these changes must be made to reduce W COS (A) to less than 95% of the force rating:

- Reduce the sensor roll weight
- Increase angle (A)
- Use the next higher force rating (this is not desirable as sensor signal output is reduced)

Selection of Force Rating

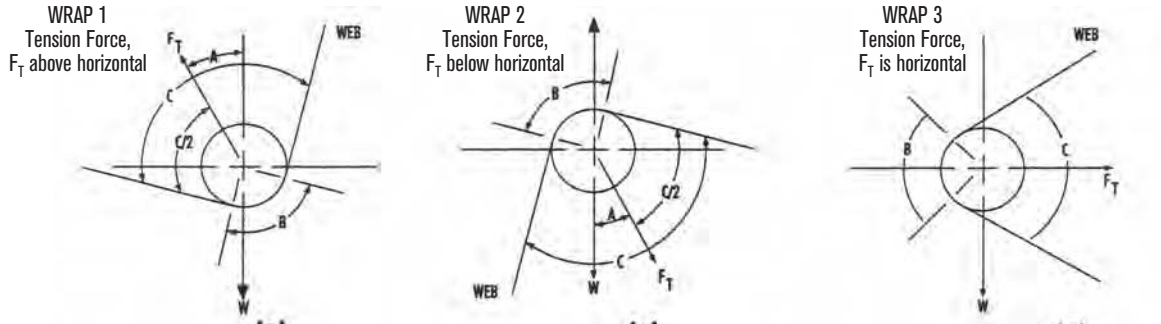

$$\text{NET FORCE} = \frac{4T \sin\left(\frac{B}{2}\right) - W \cos(A)}{2} \qquad \text{NET FORCE} = \frac{4T \sin\left(\frac{B}{2}\right) + W \cos(A)}{2} \qquad \text{NET FORCE} = \frac{4T \sin\left(\frac{B}{2}\right)}{2}$$

W = idler roll weight, T = maximum web tension, B = wrap angle = 180° - C°

ELECTRO-PNEUMATIC CONVERTERS

Converts an electric current input signal into a pneumatic signal.

EN 50 & EN 40 Dimensions page 305

EN 50 Electro-Pneumatic Converter

The EN 50 is designed to accept a low power 4-20 mA or 0-10 volt signal, and to convert this signal into a proportional pneumatic pressure.

Standard Features

- High pneumatic pressure output
- Excellent linearity and response
- Temperature compensated
- Compact size
- Simple Installation and Maintenance
- Flexible mounting options
- Field reversible for reverse output operation
- Optional volume booster available for even more flow capacity
- CE marked

Function

The electro-pneumatic converter, Model EN 50, converts a current or voltage signal into a proportional pneumatic output. The typical application is controlling a pneumatic clutch or brake from an electronic controller. Nexen tension controllers, either the open loop or closed loop types, require the EN 50 as an interface to control a pneumatic clutch or brake.

Available in three output ranges

The EN 50 Electro-pneumatic transducer is available in 3 output ranges to match your requirements.

Model	Product Number	Signal Input	Air Output
EN 50-15	964229	4-20 mA	0-15 psi (0-100 kPa)
EN 50-60	964230	4-20 mA	0-60 psi (0-420 kPa)
EN 50-85	964231	4-20 mA	0-85 psi (0-595 kPa)
EN 50-85V	964232	0-10 volts	0-85 psi (0-595 kPa)

Filtering

Instrument quality air, per ISA Standards D7.3-1981, is required. Use a filter to remove dirt and liquid from the air line ahead of the transducer if necessary. If an air line lubricator is used, it must be located downstream, beyond the transducer.

Product Number	Description
912142	See page 305

Air Volume Booster

For those rare applications where long air lines require extra air volume, a volume booster is available. Order part number 964228.

CE

Specifications

FUNCTIONAL

SPECIFICATIONS	EN 50-15	EN 50-60	EN 50-85	EN 50-85V
Output Range	0-15 psig (0-100 kPa)	0-60 psig (0-420 kPa)	0-85 psig (0-595 kPa)	0-85 psig (0-595 kPa)
Supply Pressure	20-150 psig (140-1050 kPa)	65-150 psig (455-1050 kPa)	90-150 psig (630-1050 kPa)①	90-150 psig (630-1050 kPa)
Effects on Output	.5 psig (4 kPa) @ 25 psig (175 kPa)	1.0 psig (7 kPa) @ 25 psig (175 kPa)	1.5 psig (10.5 kPa) @ 25 psig (175 kPa)	1.5 psig (10.5 kPa) @ 25 psig (175 kPa)
Minimum Span	12.5 (84)	25 (175)	50 (350)	50 (350)
Air Consumption (SCFM)	12.0 (0.34m³/Hr)	13.0 (0.36m³/Hr)	6.0 (0.48m³/Hr)	6.0 (0.48m³/Hr)
Flow Rate (SCFM)	11 SCFM (3.19 m³/Hr) @ 150 psig (1050 kPa) and 9 psig (63 kPa) output			
Impedance/Input Signal	250 Ohms	256 Ohms	270 Ohms	893 Ohms

① If the supply pressure is less than the lower pressure, The maximum output pressure is reduced proportionly.

PERFORMANCE

SPECIFICATIONS	EN 50-15	EN 50-60	EN 50-85	EN 50-85V
Impedance/Input Signal (%FS)	±0.75	±1.0	±1.0	±1.0
Hysteresis and Repeatability	<1.0% FS @ 35 psig supply	<1.0% FS @ 65 psig supply	<1.0% FS @ 125 psig supply	<1.0% FS @ 125 psig supply
Temperature Range	-20° F to +150° F (-30° C to +65° C)			
Materials of Construction	Body and Housing: Aluminum, Orifice: Sapphire, Trim: Stainless Steel, Brass, and Zinc Plated Steel			

ELECTRO-PNEUMATIC CONVERTERS

Converts an electric current input signal into a pneumatic signal.

EN 40 Electro-Pneumatic Converter

The EN 40 is designed to input a DC signal in the ranges of 4-20 mA or 10-50 mA, and to convert this signal into a proportional pneumatic pressure.

Standard Features

- High pneumatic pressure output
- Excellent linearity and response
- Compact size
- Simple installation and maintenance
- External zero adjustment
- Can be mounted at angles of up to 15°
- Temperature compensated
- Volume booster incorporated
- Can be applied to manifold circuits

Function

The electro-pneumatic converter, Model EN 40, converts a current signal into a proportional pneumatic output. It also incorporates a volume booster to assure the flow rate and pneumatic pressure required by pneumatic equipment for industrial use.

Flow vs. Pressure

EN 40-1D @ 20 psi input-138 kPa

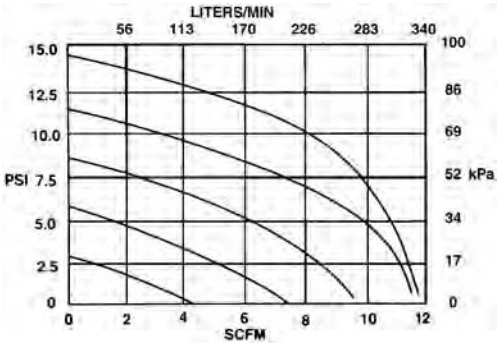

Flow vs. Pressure

EN 40-1A @ 70 psi input-483 kPa

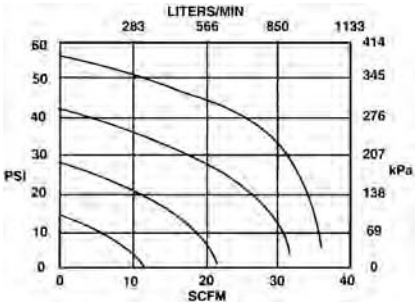

EN 40-1B & EN 40-2B @ 92 psi input-634 kPa

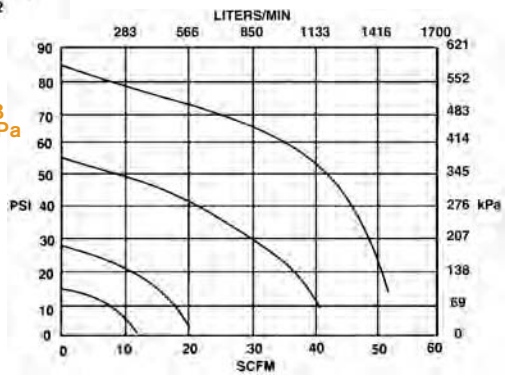

Applications

Tension Control

Model EN 40 is employed in web tension control systems using an air brake or clutch.

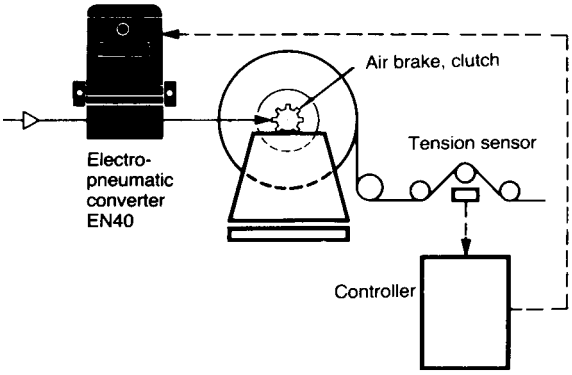

Rider Roll Control

Control roll hardness at the winder by means of a rider roll.

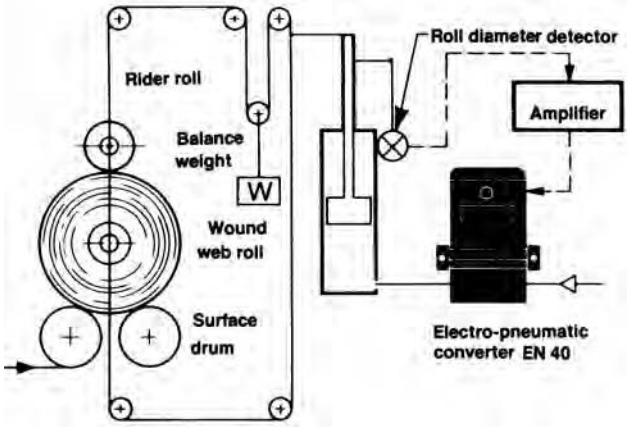

Specifications EN 40

Product No.	Model No.	Current Input	Air Output	Air Input Maximum	Air Consumption
912001	EN 40-1D	4-20 mA	0-15 psi	20 psi	.18 SCFM @20 psi
			10-100 kPa	138 kPa	5 kPa
912004	EN 40-2B	10-50 mA	0-85 psi	100 psi	.42 SCFM @85 psi
			0-595 kPa	690 kPa	12 kPa
912028	EN 40-1B	4-20 mA	0-85 psi	100 psi	.42 SCFM @85 psi
			0-595 kPa	690 kPa	12 kPa
912035	EN 40-1A	4-20 mA	0-57 psi	70 psi	.32 SCFM @57 psi
			0-343 kPa	483 kPa	9 kPa

Load Resistance 450 Linearity ± 1% Weight 4.4 lbs

Filtration

This converter must be used with an air supply filtered to 0.10 micron. We recommend Nexen filters.

Product Number	Description
912142	3 micron prefilter and .1 micron final filter

ELECTRO-PNEUMATIC CONVERTERS

Converts an electric current input signal into a pneumatic signal.

Dimensions EN 50

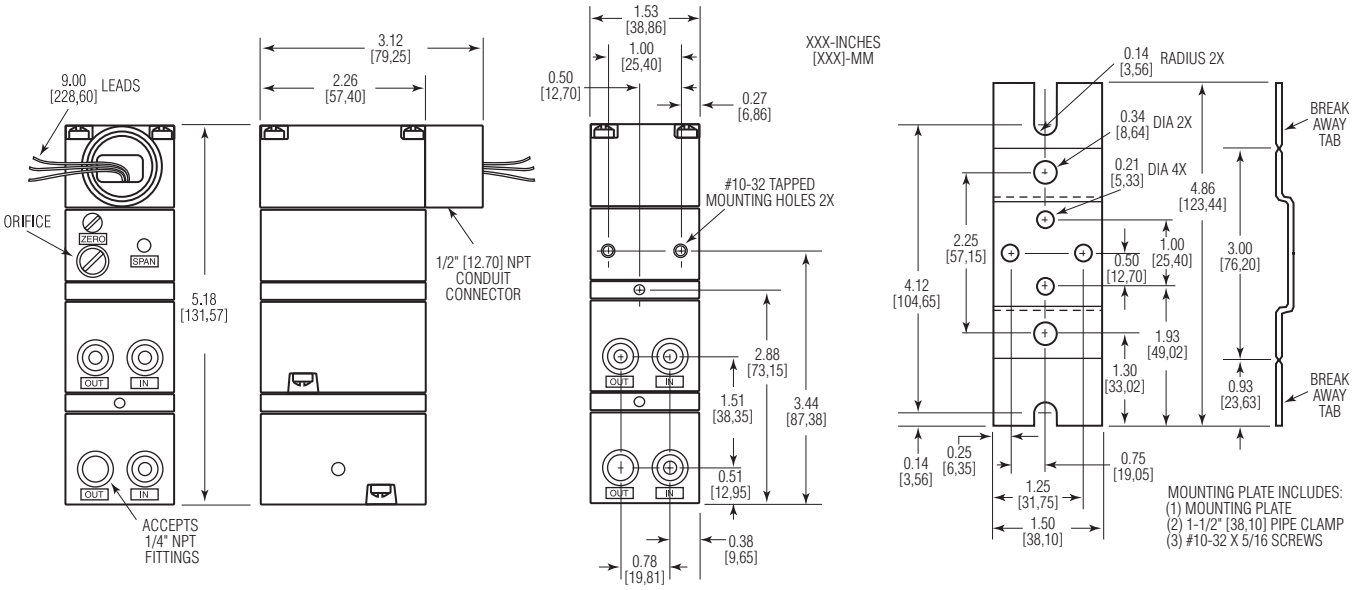

Dimensions EN 40

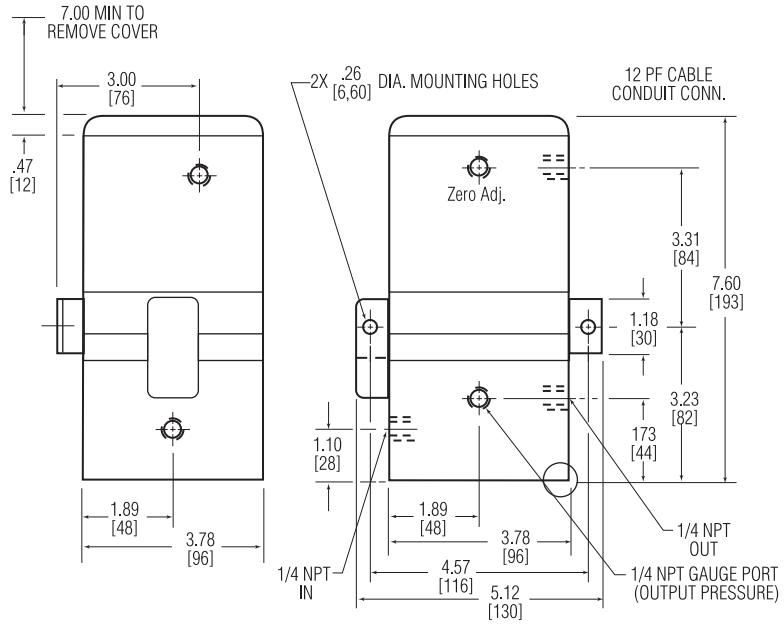

Base Mounting Dimensions

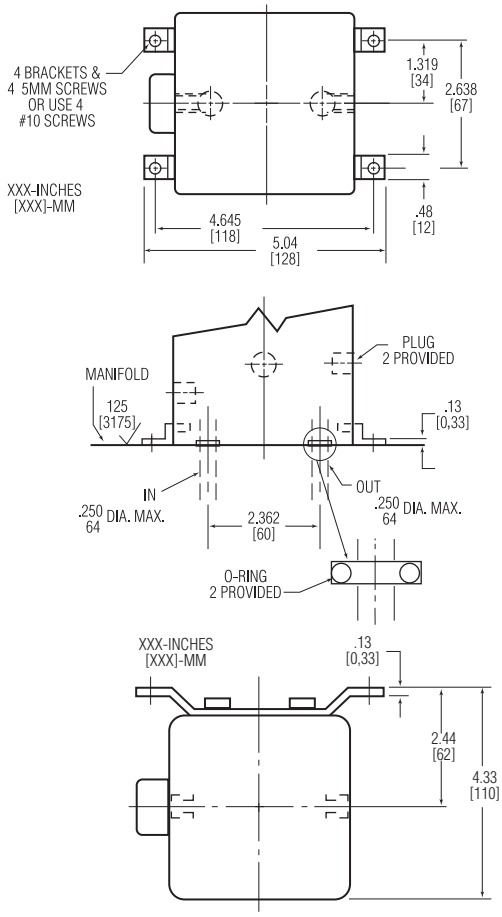

AUXILIARY PNEUMATIC CONTROLS

Single Stage Caliper Control

This simple, easy-to-use control is ideal as a manual brake control. Simply connect inlet and outlet lines and set the regulator to desired starting air pressure. Turn the regulator down as roll diameter decreases to maintain constant tension. Turn the toggle valve on or off to allow airflow to the brake calipers.

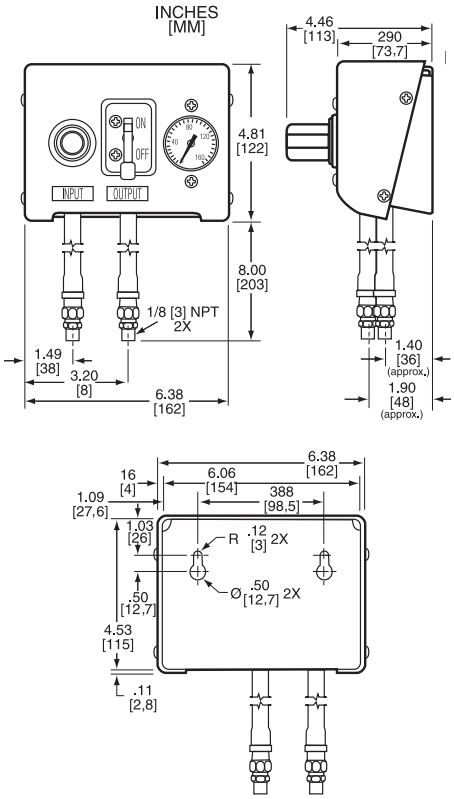

Regulation of air pressure to control brake calipers

- Wall mount
- 5-125 psi (34-862 kPa) range gauge
- 3/32" (4mm) internal flow passages
- 1500 SCFM (42,475 liter/min) flow rate at 100 psi (690 kPa)
- 300 psi (2068 kPa) maximum inlet pressure
- 180° F (82° C) maximum operating temperature
- 1/8 NPT air inlet connection (1)
- On/Off toggle valve control
- Perfect as a manual backup to an automatic tension control system

3-Stage Caliper Control

Use this control to direct regulated air pressure to three separate sets of caliper connections. Like the single caliper model, this control has an adjustable regulator, but 3 rocker valves allow you to individually control 3 set of calipers. The sets can be configured as you see fit. You control caliper sets as a single, as a pair, or as a series. This gives you up to 8 different control configurations. This flexibility means you can control lines running delicate tissue or heavy stock without worrying about variations in brake control.

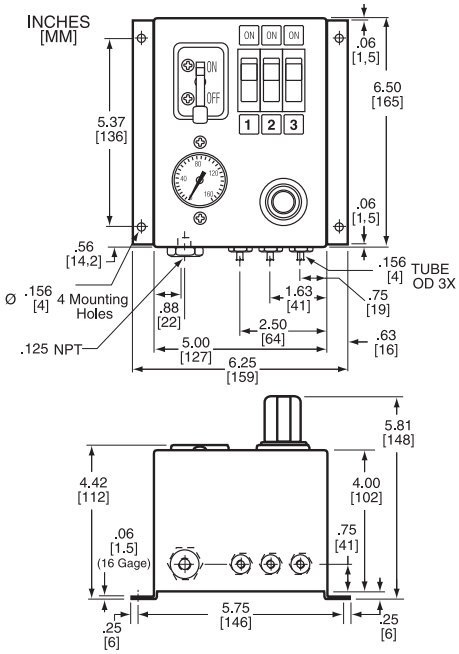

- Wall mount
- 5-125 psi (34-862 kPa) range gauge
- 3/32" (2.38 mm) internal flow passages
- 1500 SCFM (42,475 liter/min) flow rate at 100 psi (690 kPa)
- 300 psi (2068 kPa) maximum inlet pressure
- 180° F (82° C) maximum operating temperature
- 5/32" (4 mm) push-insert output connections (3)
- On/Off toggle valve and 3 rocker control valves
- 8 possible configurations
- Perfect as a manual backup to an automatic tension control system

Four Stage Caliper Manifold

This manifold gives you 16 combinations of on/off caliper control. Run pressure-regulated air to the manifold and use the on/off valves to select the correct combination of calipers.

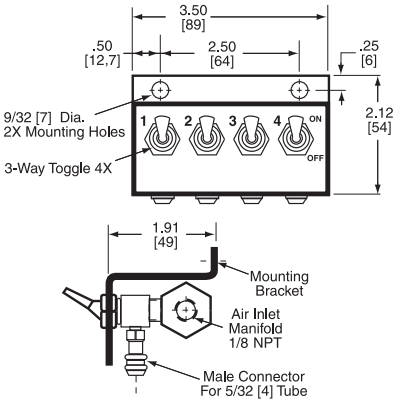

- Mounts directly to guard or wall
- 3/32" (2.38 mm) internal flow passages
- 1500 SCFM (42,475 liter/min) flow rate at 100 psi (690 kPa)
- 300 psi (2068 kPa) maximum inlet pressure
- 180° F (82° C) maximum operating temperature
- 1/8 NPT air inlet connection (1)
- 5/32" (4 mm) push-insert output connections (4)
- 4 on/off toggle valves
- 16 possible configurations (on/off only)

Typical Multi- Stage Air Line Connection

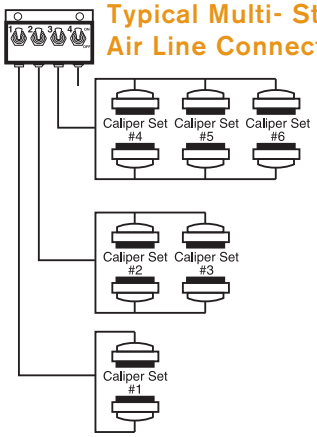

Ordering Information

Model	Product Number	Shipping Wt. Lbs.[kg]
Single Stage Caliper Control	854000	2.5 [1,1]
3-Stage Caliper Control	835120	5.7 [2,6]
Four Stage Caliper Manifold	835134	1.0 [0,45]

TCD600 DIAMETER TENSION CONTROLLER

The central component of a tension control system.

TCD 600 Open Loop Diameter Tension Controller

The TCD 600 is the central component of a tension control system that includes controllers, sensors, and a clutch, brake, or drive. The system maintains uniform web tension in an open loop control system for printing or converting web materials including: paper, film, foil, textiles, non-wovens, metal strip and rubber. The TCD600 provides an easy-to-use operator interface in a non-contact, open loop, tension control system that provides reliable wind and unwind control.

Features and Benefits

- Three measuring systems available:
  1. Ultrasonic Sensor: direct measurement of roll diameter.
  2. Proximity Switch and Optical Encoder: calculates roll diameter.
  3. Proximity Switch only: counts up or down from initial roll diameter.
- Front panel buttons allow operator to change parameter settings of system functions.
- Illuminated two-line display allows easy set-up and continuous operational viewing.
- Automatic or manual mode control.
- Taper tension circuit included for tapered winding.
- 115/230 VAC (50/60Hz) input select switch.
- 0-10 VDC, 4-20 mA outputs for easy interface with the controlled component.
- CE Marked.
- ETL Listed.
- Automatic control– minimal operator attention.
- Programmable–allows customized operating parameters for up to five jobs in non-volatile memory.
- Can be used with a broad range of web thicknesses.
- Built-in service braking– controls web spillage during deceleration.
- Start Output Control– controls web slack and provides initial tension.
- Flexible installations– Web path alteration not required.
- Sensing elements do not contact the web– helps prevent web surface damage.
- Automatic job recall after power up.
- Press single button to adjust tension set point.

Easy Calibration, Set-up and Operation

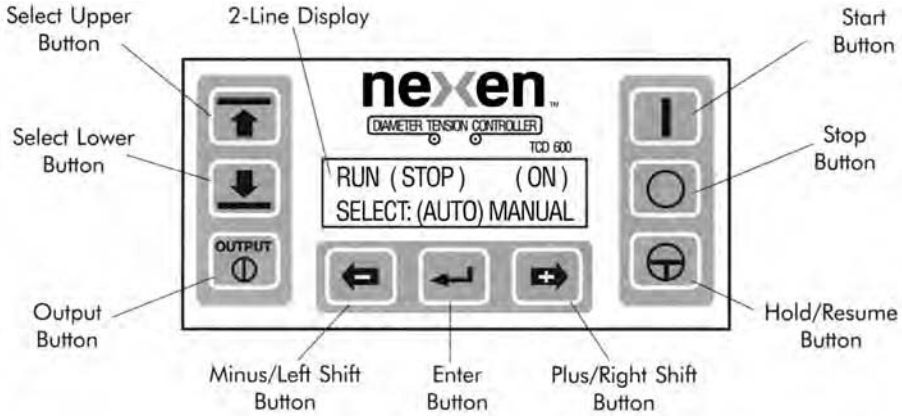

Specifications

AC Power	115 VAC/230 VAC, 0.3A/0.6A, 50/60Hz, 1 Phase
Torque Control Output	0-10 VDC @ 10mA, 4-20mA @ 650Ω max.
Diameter Output	0-5 VDC @ 10mA
Alarm Outputs	30 Volts @ 100mA (optically isolated)
Switch Inputs (Start, Stop, Hold)	14 VDC @ 1.5mA (optically isolated)
Ambient Temperature	32°F to 120°F (0°C to 50°C)
Weight	1 pound (1.6kg)

Product List / Product Number

TCD 600 Controller	English/Spanish	912123
TCD 600 Controller	English/French	912145
Ultrasonic Sensor		912127
Mounting Bracket for TCD 600		912129
Optical Encoder		912140
Encoder Mounting Bracket		912141
Proximity Switch		912068

TCD 600 DIAMETER TENSION CONTROLLER

The central component of a tension control system.

How the TCD 600 works.

- Maintains constant tension by varying brake or clutch torque proportional to the change in product roll diameter. The setpoint is adjusted for the maximum torque needed at full roll diameter, the TCD600 applies a correction based on its diameter calculation and proportionately increases clutch torque as a wound roll builds up or decreases brake torque as an unwind roll becomes smaller.

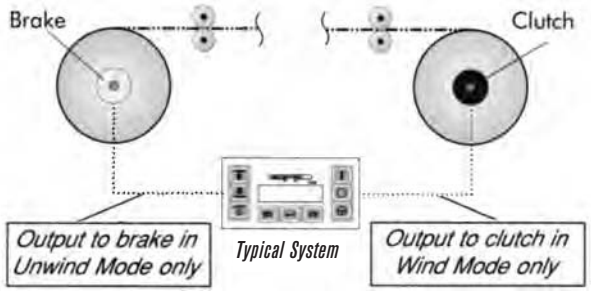

Output to pneumatic clutches and brakes is through an electro pneumatic converter (see pages 305-307). Output to electric clutches and brakes is through an external power supply. Output to a variable speed motor is through the motor control.

Applications

- The TCD 600 determines roll diameter with one of three methods:

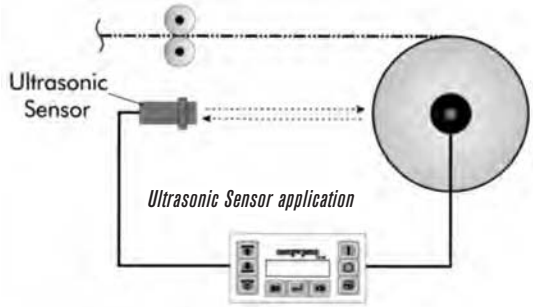

1. An ultrasonic sensor measures the distance to the surface of the product roll. A short distance indicates a full roll and a longer measurement indicates a smaller roll.

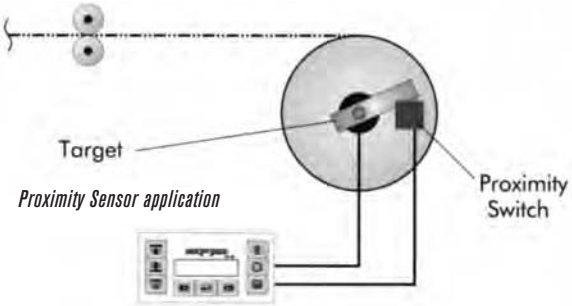

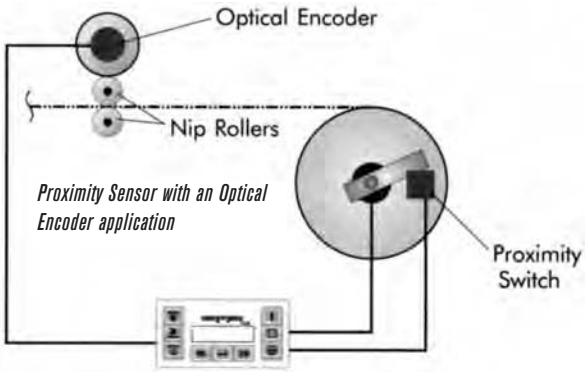

Ultrasonic Sensor (912127)

Power Supply: 20-30VDC Reverse Polarity Protected
Input Current: 50mA
Operational Range: Adjustable 4" To 40" [100 TO 1000 mm]

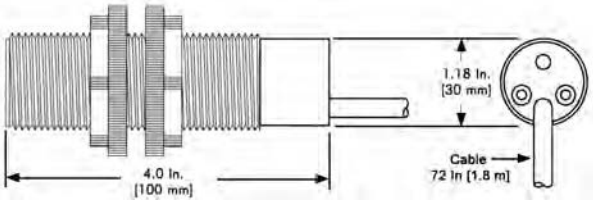

Proximity Switch (912068)

Power Supply: 10-30VDC
Output: Open Collector
Target: Ferrous Iron
Sensing Distance: <.394 in. [10 mm]
Target Size: 1-1/2 x 1-1/2 x .04 in. [40,0 x 40,0 x 1,0 mm]
Cable Length: 80 in. [2 m]

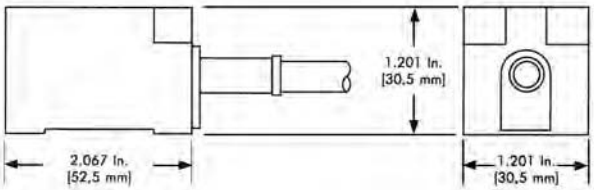

Optical Encoder (912140)
Mounting Bracket (912141)

(Optical Encoder Bracket ordered separately)

Power Voltage:
5-28VDC
Current Draw:
80mA No Output Load
Output Signal:
Open Collector, NPN
Frequency Response:
20KHz Maximum
(12" cercumference wheel provided)
Cable Length:
120 in. [3 m]

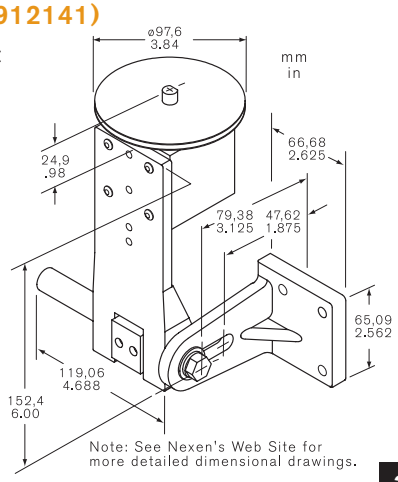

RSD DANCER CONTROL SYSTEMS

Advanced Technology for Simple Installation, Precise Control, and No Scheduled Maintenance

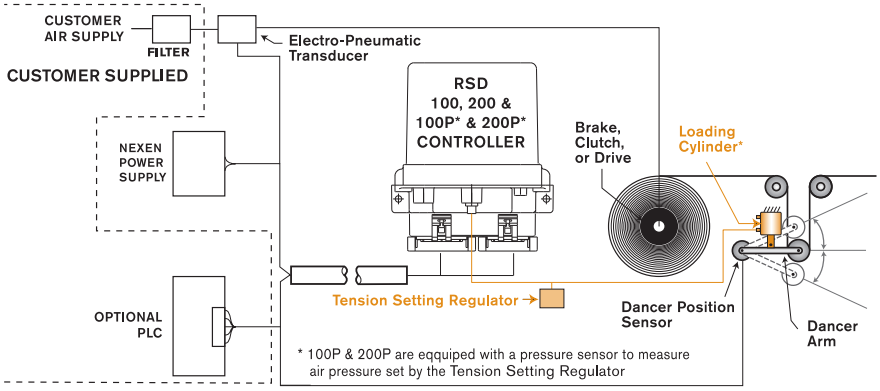

Dancer Control System

The dancer arm stores web material in a loop, and maintains constant downstream tension by increasing or decreasing the amount of material in the loop whenever the upstream web tension varies. The dancer arm performs best when it is kept in its mid-range position, where it is always capable of increasing or decreasing the volume of web storage, when reacting to tension changes.

The RSD system works to maintain constant tension and keep the dancer arm in the center of its travel range. If the dancer arm position changes, Nexen's DPS Dancer Position Sensor, senses the movement and sends a signal to the RSD controller, which provides a corrective signal to the clutch, brake, or drive to increase or decrease web storage and reposition the arm.

Nexen's closed Loop dancer control systems feature the RSD Series of Dancer Controls for consistent web tension that automatically adjusts for changes in roll size and inertia. The four controls in this series are RSD100, RSD100P, RSD200, and RSD200P. The last product in this group is a complete unwind dancer control package for use with pneumatic brakes, the RSD250.

RSD Common Features

All of the controllers are designed to work with the Nexen DPS30 or 60 Hall Effect Sensor to sense dancer arm travel through either 30 or 60 degrees of arm movement.

The controllers can also provide either a 4 – 20 mA or 0-10 VDC control output signal for use with clutches, brakes, or drives.

Each controller is capable of communicating via RS232 that allows commands to be sent and status/data to be received via computer or programmable logic controller.

Each controller is packaged in a sealed enclosure, operates over a 0 - 60°C [32 - 140°F] temperature range, and is CE and ETL approved.

Communications Software

Set up and calibration of the controllers is performed with the Nexen Communications Software installed on a computer. This Software is Windows 98, and later compatible and can be downloaded from Nexen's website. The software guides you through the simple set up steps and even features a diagnostic screen to display, both graphically and digitally, the real time effects of any tuning adjustments.

Once the controller is up and running there should be no need to ever redo the set up. Set it and forget it.

All setup and tuning parameters can be saved to a file and reused to setup an identical machine in the future.

Specifications RSD100, 100P & 200, 200P, Dancer Controllers

POWER SUPPLY		+24 VDC at 500 mA
ISOLATED POWER SUPPLY		15-24 VDC at 150 mA
OPERATING AMBIENT TEMPERATURE		0°C to +60°C [32°F to +140°F]
INPUTS	Digital	12-24 VDC at 24 mA Maximum
	Analog	0-12 VDC at 1 mA Maximum
OUTPUTS	Control (Analog)	0-10 VDC or 4-20 mA
	Position Sensor Excitation Voltage	+12 VDC at 100 mA
ENCLOSURE		Nylon with o-ring seal
CABLE		20 AWG conductors, 2m [78in] long

Model		Product Number
Digital Dancer Controller	RSD100	964520
Digital Dancer Controller	RSD100P	964522
Digital Dancer Controller	RSD200	964531
Mobus RTU	RSD200	964533
Mobus RTU	RSD200P	964536
Digital Dancer Controller	RSD200P	964535
Power Supply		964509
Communications Software	RSD100	964521
Communications Software	RSD200	964527
Dancer Position Sensors	DPS30 DPS60	964510 964511
Roll Diameter Sensor *(See page 309)*		912127
Electro-Pneumatic Transducer *(See page 304)*	EN50-85 EN50-85V	964231 964232
Filter *(See page 304)*		912142

Conforms to ANSI/UL STD60950
Certified to CAN/CSA=C.22.2 No.60950
+24 VDC, 500 mA max
9902354

The Dancer Controller System is CE compliant when used with the following components: RSD100 or RSD100P, RSD200 or RSD200P, EN50. DPS. and Nexen's power supply.

RSD100, 100P, 200 & 200P DANCER CONTROLS

Minimizes dancer arm movement and maintains running position.

RSD100 Specific Features

The RSD100 features automatic control gain adjustment based upon roll diameter change. As the roll diameter changes, the RSD100 can modify its control gains automatically, by observing changes in the output control signal level, or more accurately by using a roll diameter sensor.

The roll diameter sensor is an ultra sonic ranging sensor that senses the distance from the sensor to the surface of the unwind or wind up roll.

The RSD100 uses a PID control algorithm, which is tuned with the Nexen Communications Kit.

RSD100P Specific Features

The RSD100P is an RSD100 equipped with a pressure sensor to sense the air pressure in the dancer arm's loading cylinder. This pressure signal provides the RSD100P with the ability to adjust control gains automatically as the web tension is changed. This controller is recommended over the RSD100 if web tension is changed more than +/- 20%.

RSD200 Specific Features

The RSD200 features automatic gain adjustment based on changes in roll diameter and inertia. Internally, the RSD200 utilizes a non-linear adaptive algorithm that models an ideal unwind or wind torque control application.

Adjusting tuning parameters allows the RSD200 to adjust that model to fit the actual application. The end result is high performance control without the need for the additional feedback sensors common to many drive systems.

Simplicity is another feature of the RSD200. The basic system only requires a dancer arm position sensor and a machine start/stop signal to deliver high performance.

The adaptive algorithm also provides for Smart Splicing, which allows the RSD200 to accommodate different size rolls during splicing without readjusting settings.

The Super Crawl feature of the RSD200 gives it the ability to maintain stable performance with small roll diameters and slow web speeds.

RSD200P Specific Features

The RSD200P is an RSD200 equipped with a pressure sensor to sense the air pressure in the dancer arm's loading cylinder. This pressure signal provides the RSD200P with the ability to adjust control gains automatically as the web tension is changed. This controller is recommended over the RSD200 if web tension is changed more than +/- 50%.

See next page for RSD250 Unwind Dancer Package Features

RSD100, 100P & RSD200, 200P Approximate Dimensions

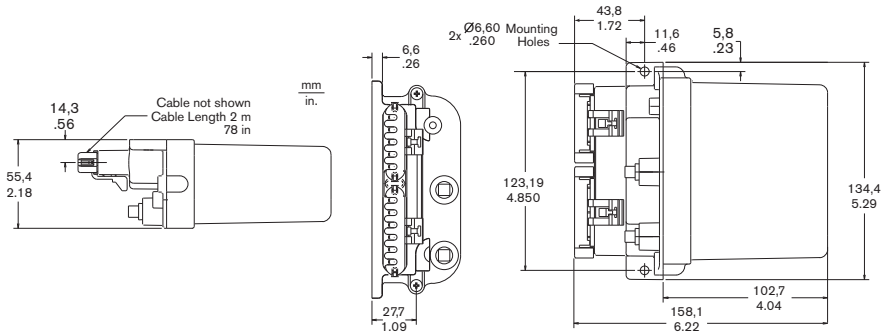

Features

- Control outputs of 4-20 mA and 0-10 V
- 12 VDC reference output for Dancer Arm Position Sensor
- Inertia compensation
- Accommodates Flying Splice Applications
- Operating temperature of 0°-60°C [32°- 140°F]
- PID control algorithm
- Setup parameters adjusted via computer interface - No potentiometers to adjust
- RSD control status available via RS232 communications
- Designed for mounting anywhere on a machine
- Drip proof and dust tight enclosure
- No risk of hazardous voltages with 24 VDC operation
- ETL & CE certified

DANCER CONTROL SYSTEM POWER SUPPLY

Nexen's +24 VDC power supply is compatible with the RSD100, RSD100P, RSD200 and RSD200P Dancer Control Systems

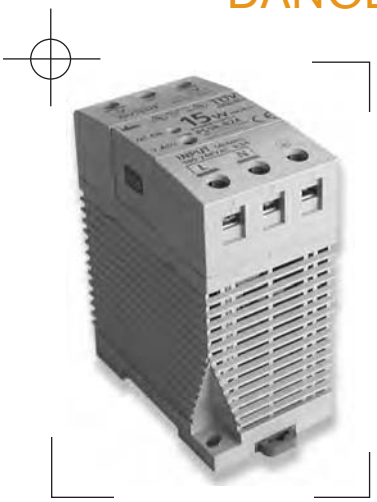

Approximate Dimensions

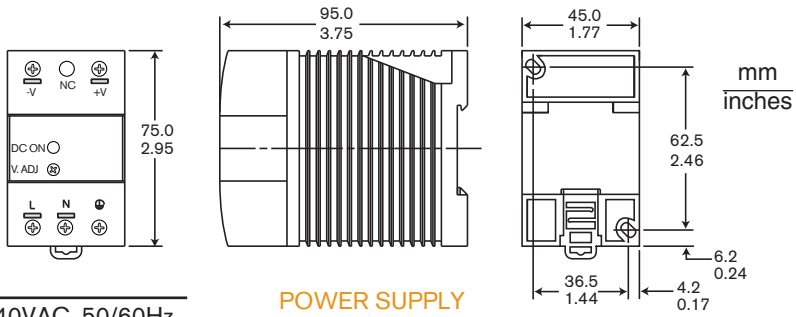

POWER SUPPLY
P/N: 964509

Specifications

Input	100-240VAC, 50/60Hz
Output	24VDC 0.6A

RSD250 UNWIND DANCER PACKAGE

Includes all the essential components for state-of-the-art dancer arm control.

Unwind Dancer Package

Nexen's RSD250 Unwind Dancer Package includes all the essential components for state-of-the-art dancer arm control. Pre-configured for unwind applications using a pneumatic brake, this closed loop dancer control system features the RSD250 dancer position controller, which automatically adapts to changes in roll size and inertia.

The RSD250 is a modified version of the RSD200. The Communications Kit is not needed for normal operations because calibration and tuning is accomplished with two potentiometers located on the PC board. For more demanding applications the Communications Kit can be used to configure calibration and tuning parameters for more exacting control.

Each RSD250 Package includes an RSD250 dancer controller, DPS60 dancer arm position sensor, EN50 pressure converter, air supply filter, air line tubing with fittings, and electrical cables with quick connect fittings. This complete package, ideal for paper, film, foil, textiles, rubber, and wire applications, combines high performance with easy installation.

RSD250 Preconfigured System Simplifies Setup and Installation

The RSD250 Package comes preconfigured for unwind pneumatic brake applications, with essential setup parameters set. Installers simply calibrate the dancer arm range and select the start/stopped signal used on the machine. Tuning is also simple with only two potentiometer adjustments. Once tuned and calibrated, it automatically compensates for tension disturbances.

Adaptive Gain Ensures Optimal Tension Control

The RSD250 Package features state-of-the-art technology that actually takes into account the changes in both roll diameter and inertia, compensating for these issues before tension disturbances occur. This keeps the dancer arm stable while maintaining constant web tension.

Smart Splicing Reduces Roll Waste

The RSD250 quickly adapts to new rolls without causing tension disturbances, regardless of differences in roll size or speed.

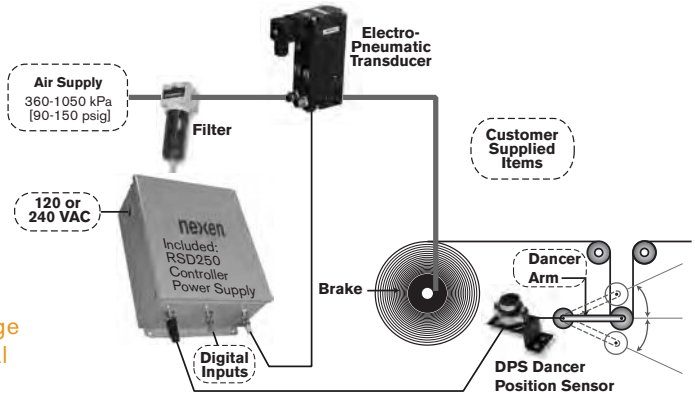

All-Inclusive Package Integrates Individual Components

The RSD250 Package is designed to take care of itself, requiring only dancer arm feedback and a machine start/stop signal to expertly adapt to any tension situation. Electrical connections between each component of the RSD250 system are prewired; pneumatic Connections feature tool-less quick connect fittings, so making connections is fast and easy with little chance of error.

Additional Features/Benefits

- Simple setup and use
- Adaptive gain control
- Drive-like performance without the cost
- Inertia and diameter based gain compensation
- Super crawl: handles very small rolls and low speeds
- Minimal sensor feedback needed
  - Automatically compensates for roll-diameter changes, egg-shaped rolls, and other tension disturbances
  - Low integration and startup costs
- Only two potentiometer adjustments for tuning
- Connectors provided on external components
- All-in-one filter included

RSD250 Specifications

Power Supply		100 – 240 VAC, 12 VA, 50/60 Hz
Ambient Operating Temperature	RSD250	0°C – 60°C [32°F – 140°F]
	Air Filter	4°C – 50°C [40°F – 120°F]
Air Supply		630 – 1050 kPa [90 – 150 psig]
EN50 & Digital Inputs Cable		6,0 m [236 in] long
DPS60 Cable		4,5 m [180 in] long
Air Line Tubing		6,1 m [240 in] long

Product Numbers

RSD250 Unwind Dancer Package	964260
RSD 200 Communications Software (Optional) (Download from Nexen's website)	964527

RSD250 Unwind Dancer Package Approximate Dimensions

RSD250 Enclosure

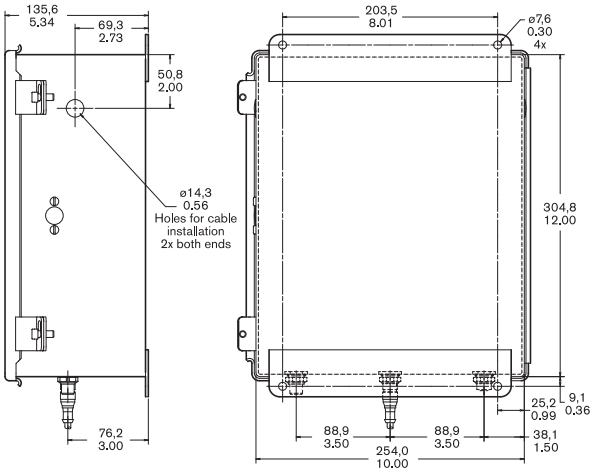

Air Filter

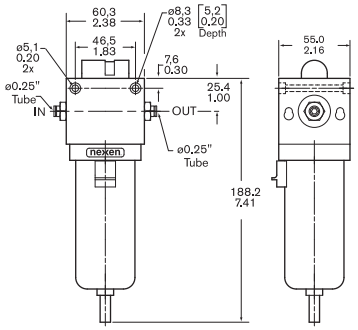

Filter Specifications

Filters: 3 Micron Internal Prefilter and .1" Micron Outer Coalescing Filter

Temperature Range: 40° F (4° C) to 120° F (50° C)

Maximum Pressure: 150 PSIG (10 BAR)

Flow: 34 SCFM • 80 PSIG Differential
18 SCFM • 20 PSIG Differential

EN50 Electro-Pneumatic Transducer

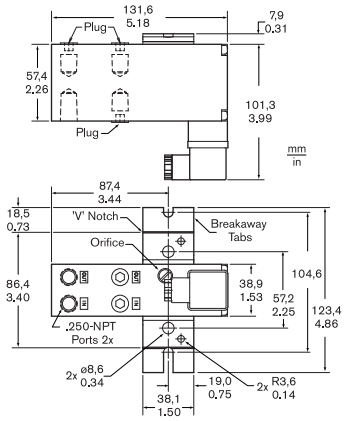

EN50 Specifications See page 305

RSD100, 100P, 200, 200P & RSD250 Product Compatibility

COMPONENT	SYSTEM TYPE				
	RSD100	RSD100P	RSD200	RSD200P	RSD250
Dancer Position Sensor	N	N	N	N	I
Roll Diameter Sensor	O	O	NN	NN	NN
EN50 Transducer	O	O	O	O	I
Air Filter	O	O	O	O	I
Air Loaded Dancer Arm	NN	N	NN	N	NN
Power Supply	O	O	O	O	I
Communications Kit	N	N	N	N	O

Explanation:
N = Needed Component, NN = Not Needed , I = Included., O = Optional Component; the EN50 and the Filter needed to clean it's air supply are only needed when the RSD system is to be used to control a pneumatic device. The Power supply is only needed when there is not a 24VDC supply available on the machine. The Ultrasonic roll Diameter Sensor is needed for more accurate diameter feedback on the RSD100 and RSD100P controllers.

DPS30 AND DPS60 DANCER POSITION SENSOR

Nexen's dancer position sensors are designed to accurately measure the rotational movement of a dancer arm. This family of sensors uses Hall Effect technology for infinite resolution, low drag, and no mechanical wear. The DPS30 and DPS60 offer non-contact operation without the use of potentiometers or gearing. This means smooth operation (low drag), no maintenance, and high accuracy. Its small size makes the DPS easy to install and incorporate into existing systems.

Sensor Specifications

	DPS30 - 964510	DPS60 - 964511
POWER SUPPLY*	+12 VDC, ±0.5V @ 40 mA	+12 VDC, ±0.5V @ 40 mA
OUTPUT VOLTAGE	10-0 VDC & 0-10 VDC @ Max angular rotation	10-0 VDC & 0-10 VDC @ Max angular rotation
TEMPERATURE	-40°C to +80°C [-40°F to +176°F]	40°C to +80°C [-40°F to +176°F]
ENCLOSURE	NEMA 4	NEMA 4
RESOLUTION	Infinite	Infinite
ANGULAR ROTATION (ACTIVE RANGE)	± 15°	± 30°

* Supplied by RSD Dancer Controls

DPS Approximate Dimensions

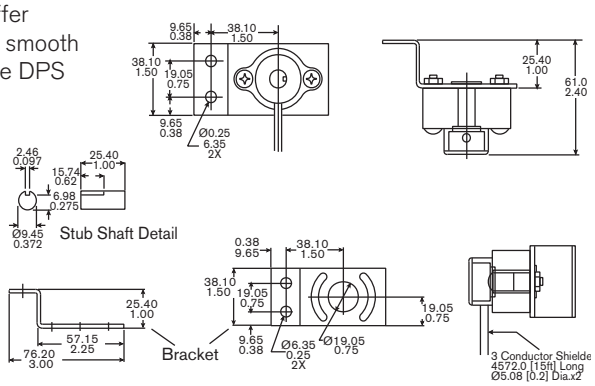

TA 100/TA 110 TENSION AMPLIFIERS

Superior signal conditioning for web tension sensors.

TA 100/TA 100A and TA 110/TA 110A Tension Amplifiers

These Tension Amplifiers both interface with LVDT tension sensor or strain gauge sensors to measure tension in a continuous web strip or strand of material during converting or printing. The material can be paper, film, foil, rubber, wire, metal strip, non-wovens or textiles used in continuous process.

These amplifiers are ideal when you need low cost, accurate tension measurement of a web process interfaced with machine controls. Applications include input for data loggers, process controllers. Host computers or other applications that require a precise tension interface.

Precision input from either LVDT or strain gauge sensors.

Use either the TA 100 or TA 110 amplifier with any Nexen MB or SW sensors.

They provide an excitation signal to the sensors and then separately amplify the return signals from each sensor. The signals from both sensors are then added to provide the 0-10 VDC or 4-20mA proportional tension output.

Choose chassis-mount model for concealed OEM installations.

The chassis-mount style of the TA 110 makes it ideal for installations in cabinets or enclosures.

Choose fully enclosed model for easy retrofit.

The TA 100 comes complete with a NEMA-12 enclosure, making is a good choice when adding on to an existing tension control drive or other retrofit installation.

Features and benefits

- Low cost signal conditioning for LVDT or strain gauge tension sensors—easy to cost justify
- Wide tension range—flexible installation
- Chassis or enclosed versions —for easy, flexible installation
- Ideal for use with PLC's motor controllers or data logging systems where local readout is not required—saves cost
- Both 0-10 VDC and 4-20 mA outputs—easy to interface
- NEMA-12 enclosure (TA 100 & TA 100A)
- Pre-wired 8 ft. [2.4 m] Power cord included with TA100
- UL and UL$_C$ Listed, Enclosed models only

Specifications

Model	TA 100 - 110 VAC, Enclosed	**Product Number**	964400
Model	TA 100A - 24 VDC, Enclosed	**Product Number**	964411
Model	TA 110 - 110 VAC, Chassis	**Product Number**	964401
Model	TA 110A - 24 VDC, Chassis	**Product Number**	964412

Input power	24 VDC or 110 VAC, 50/60 Hz, 1 Phase, Prewired 8 ft. [2.4 m] power cord for 110 VAC (fused)
UL and ULC Listed	Enclosed models only
Sensor compatibility	Any Nexen MB or SW sensors
Outputs	0–10 VDC, 4–20 mA
Operating temperature	50°F to 120°F (10°C to 50°C)
Operating humidity	10% to 90% relative non-condensing
Storage temperature	-30°F to 150°F (-35°C to 65°C)
Storage humidity	10% to 90% relative non-condensing

TA 100/TA 110 TENSION AMPLIFIERS

Superior signal conditioning for web tension sensors.

Dimensions TA 100/TA 100A

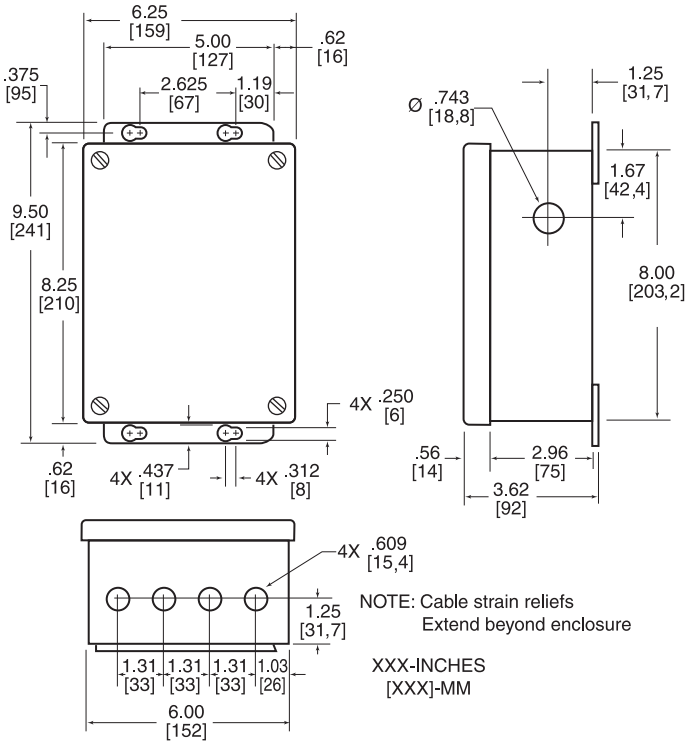

Dimensions TA 110/TA 110A

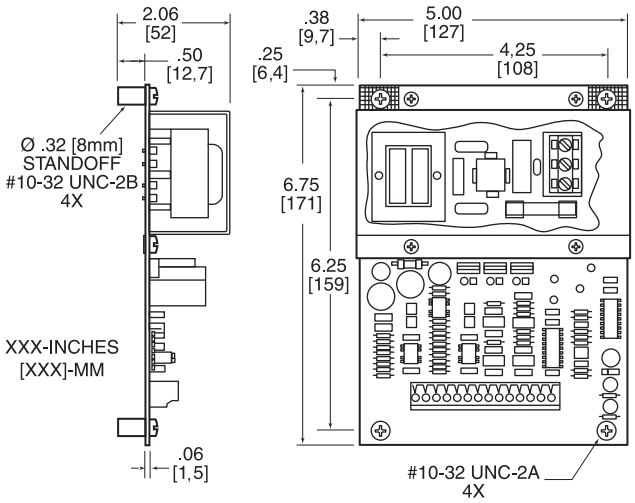

SIGNAL CONDITIONER – SC100

Use with indicators, PLCs, PCs, or web controls

Signal Conditioner–SC100

Nexen's SC100 signal conditioner provides excitation and signal processing to amplify low voltage sensor signals. Signals are amplified to industry standard voltage/current levels and outputs are suitable for use with indicators, PLCs, PCs, and web controls.

The SC line offers two sensor channels and supports two different sensor families: differential signal sensors and single-ended signal sensors. Differential sensors such as strain gauge load cells are used to measure force or tension. Single-ended sensors such as LVDT load cells and web guide sensors are used to measure force, tension or we edge position. Operators can optimize signal conditioner outputs using either the summation of both sensor channels or each channel individually.

Specifications

Model		SC100
Product Number		964420
Power Supply		+24 VDC at 500mA
Isolated Power Supply (Optional)		+24 VDC at 500mA
Analog Inputs		Individual: 0-1 V Max Summed: 0-500 mV Max
Operating Ambient Temperature		0° C [32° F] to 60° C [140° F]
Outputs	Control (Analog)	0-10 VDC
	Control (Analog)	4-20 mA
	Sensor Excitation Voltage	±5 to ±15 V Adjustable
Enclosure		Polycarbonate, UL94
Din Rail		35 mm

TM 210 TENSION METER

TM 210 Tension Meter

The Nexen TM 210 Tension Meter is ideal for precise, accurate measurement, with digital readout of a tension within a web.

The digital readout can be field adjusted for a maximum reading anywhere from 9 to 1999 pounds or kilograms. The readout is displayed as a four digit number with a decimal point for all ranges up to 100 lb/Kg. Beyond the 100 lb/Kg range, the decimal is deleted as irrelevant.

The TM 210 also provides a 0 - 10VDC analog output signal that is proportional across the full scale tension range. Choose a filtered or unfiltered output signal.

The TM 210 is useful as a tension readout-only device to measure mid-process tension. Its 0 to 10VDC analog output is ideal as a proportional tension data signal to process controllers, data loggers and sophisticated variable speed motor controls.

Features

- Use one or two LVDT type Tension Sensors
- Digital readout
- Panel mount
- Selectable readout of Sensor #1, Sensor #2 or total web tension
- 0 to 10VDC filtered or unfiltered control output, proportional from zero to full scale
- Calibrate digital scale to read out maximum reading anywhere in the 9-1999 range
- Front panel access to calibration controls

How the system works

Use the TM 210 with a pair of MB Tension Sensors to precisely measure web tensions. Use one of the sensors for narrow webs, single strands of wire, or any other narrow material where tension will not vary from one side to another.

The TM 210 provides an excitation signal to the MB Tension Sensors and separately amplifies the return signals from each sensor. The signals from both sensors are then added to provide the 0 to 10VDC control output.

Use the selector switch on the front panel to display the tension measurement from either sensor or the sum of both sensors.

Specifications

Product Number	912675
Digital Display	0000 to 1999 (pounds or kilograms)
Decimal Point	Used in ranges up to 100 (lb/Kg). Not used in higher ranges
Analog Output	0-10 VDC (5mA) proportional from 0 to full scale tension
Ambient Temperatures	32 to 122ºF (0 to 50ºC)
Power Supply	100, 110, 200, 220 VAC, 50/60 Hz
Weight	3.5 lb (1.6 Kg)

Dimensions

INCHES
(MM)

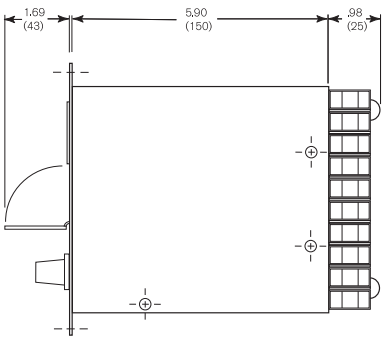

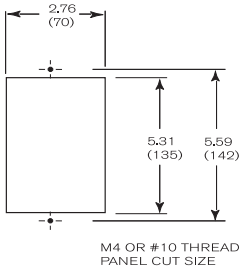

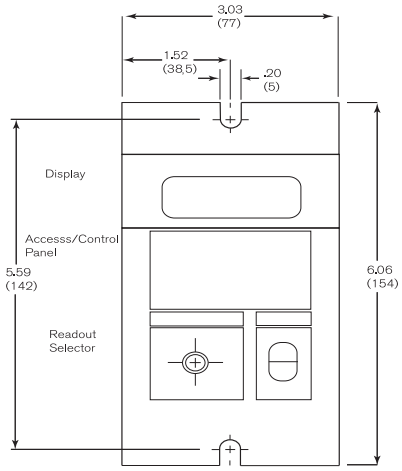

Power Switch

In accordance with Nexen's established policy of constant product improvement, the specifications contained in this document are subject to change without notice. Technical data listed in this document are based on the latest information available at the time of printing and are also subject to change without notice. For current information, please consult:
www.nexengroup.com

WEB GUIDING CONTROLS

This Section Contains: . . . . .Page

WEB GUIDING CONTROLS
GC 300 Web Guide Controllers 320-321
AE 120 Web Guide Controller 322-323
Web Guiding Sensors 324-326
Center Pivot Web Guides 327-330
Linear Actuators 331-332
TA100B/TA110B Transducer Amplifiers 333

GC 300 WEB GUIDE CONTROLLERS

The brains of the Nexen Web Guiding Systems

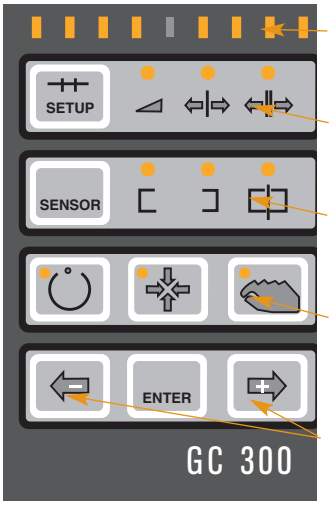

Position Display LED Bar
Indicates Faults and displays web position.

Calibration Controls
Set-up for Gain, Offset and Deadband.

Sensor Controls
Allows choice of Left, Right, or Center Position sensors.

Operation Mode
Allows choice of Automatic, Auto-center or Manual operation.

Manual Controls
Used to adjust web position in the manual mode.

GC 300 Web Guide Controllers

Model	Product Number	Description
110 VAC	912717	GC 300 – Single Sensor
110 VAC	912737	GC 300 with Second Sensor Board
110 VAC	912745	GC 300 with Remote Operator Board
110 VAC	912748	GC 300 with Second Sensor Board and Remote Operator Board
220 VAC	912719	GC 300 – Single Sensor
220 VAC	912727	GC 300 with Second Sensor Board
220 VAC	912747	GC 300 with Remote Operator Board
220 VAC	912749	GC 300 with Second Sensor Board and Remote Operator Board
	912696	Automatic Centering Proximity Sensor
	912736	Second Sensor Board

The GC 300 Web Guide Controller uses sophisticated electronics to correctly position moveable roll stands or guide roll assemblies used in printing and converting operations. The GC 300 provides accuracy to within ±0.004 inches (0,01mm) of edge or centerline positions.

The GC 300 receives signals from web position sensors and translates them into control signals for web position drive motors. The system maintains constant position of paper, film, foil, textiles, non-woven materials, metal strip, rubber or any product processed in a continuous strip.

The GC 300 can take signals from either pulsed LED sensors for opaque edge monitoring, or ultrasonic sensors for monitoring opaque and transparent materials. A special sensor is also available for following printed lines or pattern edges on previously printed webs. This is the Line Follower Sensor.

A single sensor can be used for Edge Position Control (EPC). With an optional daughter board and a second sensor, the GC 300 can provide Center Position Control (CPC). The sensor should be mounted with it's measuring center aligned with the desired position of the web edge.

CPC requires two sensors placed opposite one another on either side of the web. This configuration assures that the center of material being processed stays aligned with the center of the machine.

Standard Features

- Smart Current Limiting protects motors.
- Automatic Calibration simplifies setup.
- Universal Symbology for international applications.
- Use either Proximity or Reed auto-center sensors for flexible installation and easy set-up.
- Internal thermal protection prevents overheating.
- CE marking—usable in European community.

Three easy to use Operating Modes for flexibility.

Nexen's straight forward touch pad controls simplify adjustments and changes in operating mode.

Automatic
Actuator is constantly driven to reduce web position error to zero. Following setup and calibration this mode automatically keeps the web positioned correctly.

Manual
This mode allows you to steer the guide mechanism left or right during setup or when manual override is necessary.

Auto-centering
Using either reed switches or proximity sensors, this mode automatically centers the roll stand or guide roll assembly for machine setup, calibration or as a system "standby."

GC 300 WEB GUIDE CONTROLLERS

Easy Calibration, Set-up and Operation

Maximum Output:
24VDC at 6 amps max.

Smart over-current protection and indication. Protects motors while allowing full force operation when needed.

Thermal overload protection of driver stages. Motor miswiring warning. Determines and displays motor wiring errors.

Right and left travel limit protection and indication. (Both visual and relay closure).

Sensor type selection.
Dip-switch selection of ultrasonic, LED, or Line Follower type sensor.

Automatic sensor calibration.
Sets optimal offset, gain and deadband.

Manual sensor calibration to override the automatic settings when needed.

Programmable sensor offset (with fault indication).

Remote sensor offset.
A remote pot. can be used to electronically offset the center of the guide sensor.

Instrumentation output available.

Center guiding available.
(Use daughter board accessory for second sensor). Automatically enabled when daughter board is present.

Auto-center function included standard.
Operates with either reed switch or proximity sensor input.

Front panel membrane switches.
Allows all calibration to be accomplished from the front panel.

Front panel LED bar graph for rapid interpretation of status.
Used to display web position within the sensor window; and also display faults and parameters during calibration.

Factory settings stored in memory.
Return the unit to "factory parameter status" quickly and easily.

Sealed for use in dusty environments.

CE Marked

Dimensions

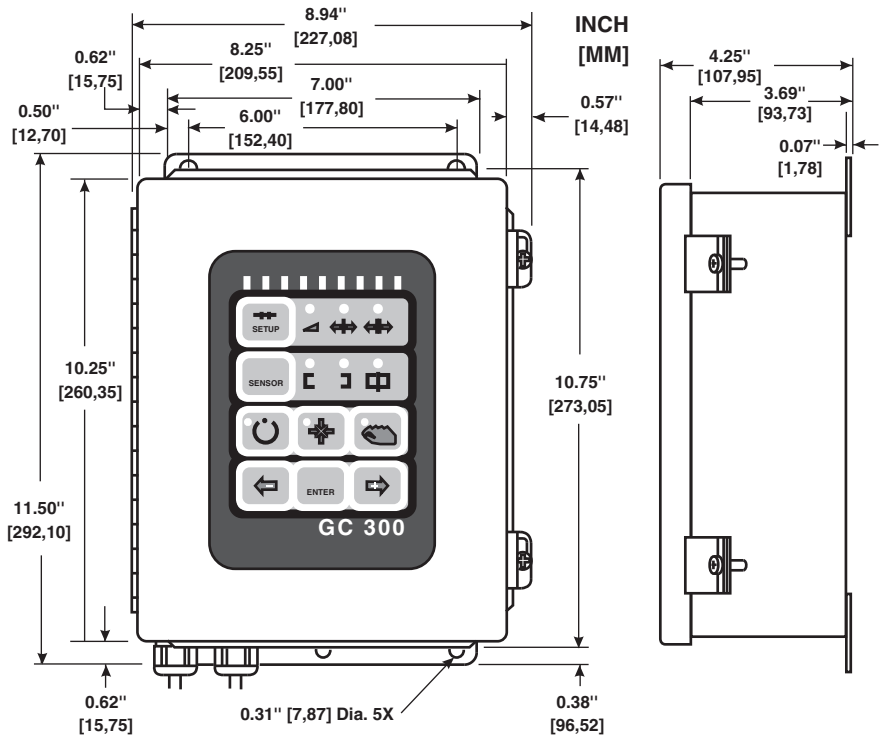

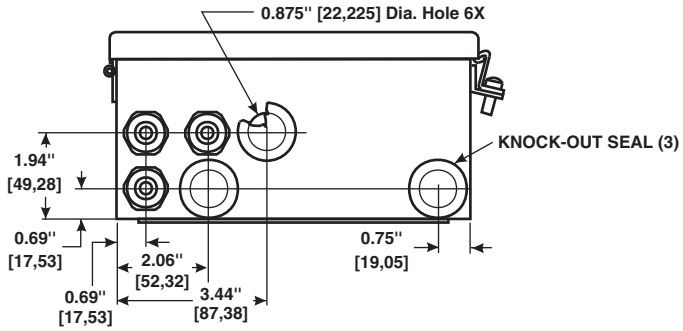

Specifications

Accuracy	± 0.004" [0,1mm] with Appropriate sensors
Power	110 VAC or 220 VAC, 160 VA at 50/60 Hz
Ambient Temp. Range	32° F. to 120° F. (0° C. to 50° C.)
Inputs	
Standard	Line Follower LH100 (Requires second sensor board)
Standard	One Ultrasonic UH21 or One Infrared LED PH16
Optional	Second UH21 or PH16 (requires daughter board)
Auto-center Switch	Either Limit Switch or Proximity Switch (Auto-Detect)
End-of-Travel	Limit Switches
Remote Offset Pot	2kΩ Pot. (customer supplied))
Outputs	
Motor	6 amp Max, 24 VDC, Over Current protected
End-of-Travel	SPDT Relays, Rated 0.3 amp max. @ 24 VDC
Web Position	Indication: 0-10 V

AE 120 WEB GUIDE CONTROLLER

The brains of the Nexen Web Guiding Systems

Amplifier for Automatic Web Positioning

Web position information from the sensor is fed to a web guide controller or amplifier.

The amplifier contains a SCR motor control which will drive an electrical linear actuator to correct the web position through the moveable roll stand or the guide roll mechanism.

The primary purpose of the amplifier is automatic positioning of the web in the sensor.

Amplifier Auxiliary Functions

Automatic Centering to move the roll stand or guide roll to its midpoint or neutral position during rewebbing.

Over Travel Alarm to indicate when the linear actuator has reached its maximum travel limit without being able to position the web.

Remote Position Readout to give a visual indication of web position at a remote location or as data input to a PC or PLC.

Amplifier Special Control Requirements

Special Auxiliary controls include:

A Remote Fine Tuning control to allow minute adjustment the of web position without having to physically move the sensor.

A Remote Operators Station to allow remote switching of the automatic and manual functions of the amplifier during initial tuning and running.

A Remote Position Locking Control to lock the linear actuator at any position in its travel.

AE 120 Web Guide Controller

Product Number 912674

Precise edge or center positioning control for all opaque web guiding applications.

The AE 120 Web Guide Controller is an electronic controller that correctly positions moveable roll stands or guide roll assemblies used in web printing or web converting operations. It is the controller for Nexen's Self-Contained Web Guides and can also be used as a stand-alone controller in edge or center positioning control applications.

Compact and fully featured.

It's only 7.5 inches (191mm) wide by 2.25 inches (57mm) high, by 10 inches (254mm) deep, yet the AE 120 totally controls edge and center web positions within 0.004 inches (0,01mm) .

You choose the operating mode and input signals that best suit your application.

It's part of the Self-Contained Web Guide package.

The AE 120 is the controller for Nexen's Self-Contained Web Guides. It uses a proximity sensor signal to automatically center your guide roll assembly or moveable roll stand.

It's also a stand-alone web guide controller.

The Controller also accepts several types of input signals and can send signals to various actuating devices. This makes it a compact and flexible addition to any edge or center positioning web guide system.

Controls edge positions within 0.004 inches (0,01mm).

Nexen's opaque or ultrasonic sensor provides the edge position signals to the AE 120.

Mount a single sensor on one side of the web with its measuring center aligned with the desired web edge position. This maintains the edge of the web at the measuring center of the sensor.

Controls centerline positions within 0.004 inches (0,01mm).

Mount two sensors equally spaced from the centerline of the machine. This maintains alignment of the web to the center of the machine.

Accepts input signals from 5 sources.

Nexen's AE 120 accepts signals from 5 external sources. This eliminates duplicating electronics if you need different input signals. One of the primary signal sources is required for operation. Auxiliary signal sources are optional.

Primary signal sources include:
- Opaque or ultrasonic sensor

Auxiliary signal sources include:
- Centering sensor (proximity sensor)
- Customer-supplied 10K ohm remote fine adjustment pot
- Customer-supplied lock-out switch to momentarily disable the auto correction mode
- Customer-supplied travel limit switches

Operates in three different modes for easy, flexible operation.

Simply flip a switch to choose one of these three operating modes:

Automatic – constantly drives an actuator to reduce error to zero. This keeps your web position left, right or centered, depending on configuration of edge guide sensors. Use this mode for normal running conditions following set-up and calibration.

Manual – allows you to manually steer the mechanism to the right or left. Disregards automatic settings. Use this mode for complete manual override.

Auto-Centering – automatically centers the web using a proximity sensor. Locks down the equipment for safe control. Use this mode for machine set-up, calibration or as a system "stand-by."

AE 120 WEB GUIDE CONTROLLER

AE 120 Web Guide Controller

- Operates as a stand alone unit, or included as an on-board controller for Nexen Self-Contained Web Guides
- Easy to install and calibrate
- Accepts opaque edge or ultrasonic sensor input
- Remote control option
- Lock-out switch provision
- Strain-relief clamps -eliminates disconnects.

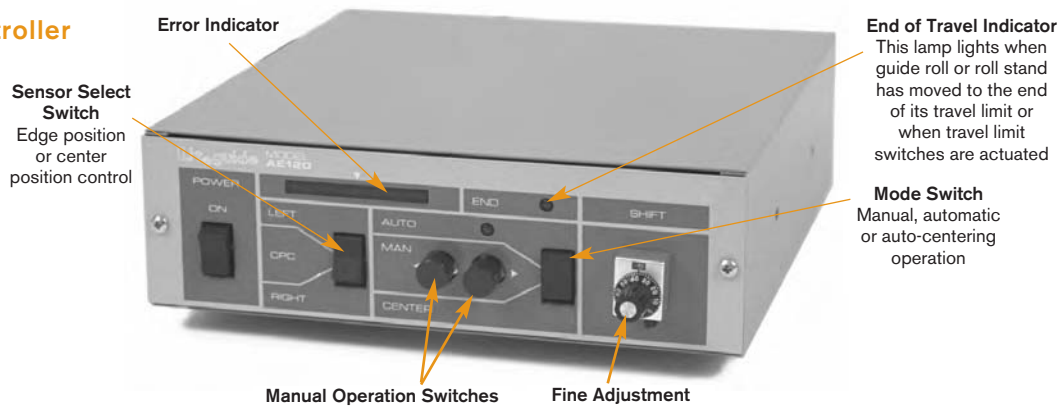

Specifications

Model	AE 120 Web Guide Controller
Product Number	912674
Power Supply Voltage	100 to 240 VAC (continuous input), 50/60 Hz
Power Consumption	100 VA
External Input	Standard Line Follower LH100
	Standard One or Two Ultrasonic UH21 or Infrared LED PH16
	Position Sensor
	Centering Sensor: Proximity Sensor
	Fine Adjuster: Optional
	Lock-out Switch: N.O. 250mA, 15 DC, 1 mA (Customer supplied)
	Limit Switches: N.C. (Customer supplied)
Output	DC Motor: 24 V DC, 1.3 A
	Lamp Power Supply: 12 V DC, 1.8 W
	End of Travel: Dry Contact, Rated 0.1 A, 250 V AC, 0.1 A, 24 V DC
Ambient Temperature	32 to 122° F. (0 to 50° C)

Dimensions

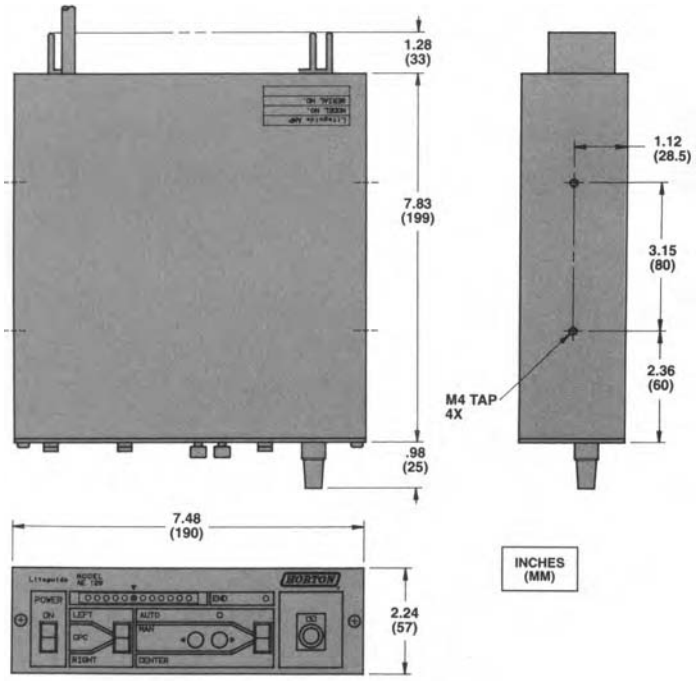

WEB GUIDING SENSORS

Nexen Web Guiding Products: Precise Yet Rugged

Nexen Web Guiding systems give you both; extreme precision, and rugged dependability.

Precise enough for the laboratory, tough enough for the mill,

Nexen Web Guiding Systems are backed by a recognized leader in guiding equipment for over three decades.

You can be sure of quality, durability and performance... with Nexen

Three types of sensors

Several types of sensors are used to detect a web's position. The type required for any web guiding system is determined by the method required (EPC, CPC, or LFC) and type of material to be sensed.

Infrared Sensor

This type of sensor is the electrical equivalent of the pneumatic sensor. Light is transmitted by a lamp across the web edge. It is received by a light sensitive sensor. Web edge position is directly related to the amount of light sensed at the receiving element. A variation of this method uses a pulsed LED in the infrared range as a light source. This type of sensor is not affected by ambient light, and is useful for processing photosensitive materials.

Line Following Sensor

LFC is achieved by bouncing light off a web as it passes around a transport roll in the machine. This type of sensor contains the lamp and sensor element in the same housing.

Ultra Sonic Sensors

Ultra Sonic Sensors can be used to sense photo sensitive products (photo film, print paper, etc.) or for transparent films with coating or printing near the edge.

Sensor Utilization Chart

MODEL	PRODUCT NUMBER	EPC	CPC	LFC	COMMENTS
PH 16	912085	X	X		Opaque edges only. Pulsed LED
PH 21	912626	X	X		Miniature version of PH 16, Opaque edges only. Pulsed LED
LH 100	912119	X		X	Line follower and web or pattern edges
UH 21	912621	X	X		Opaque or transparent edges, Ultra Sonic
AWL 280	912662	X	X		Use with AS 10 Preamplifier to sense various web widths without repositioning
AS 10	912721	X	X		Preamplifier used with AWL 280

Sensor Mounting Bracket

Product Number 3792

Universal Mounting Bracket for use on all Nexen Web Sensors. One is included free with each sensor. Brackets can also be purchased separately.

Dimensions

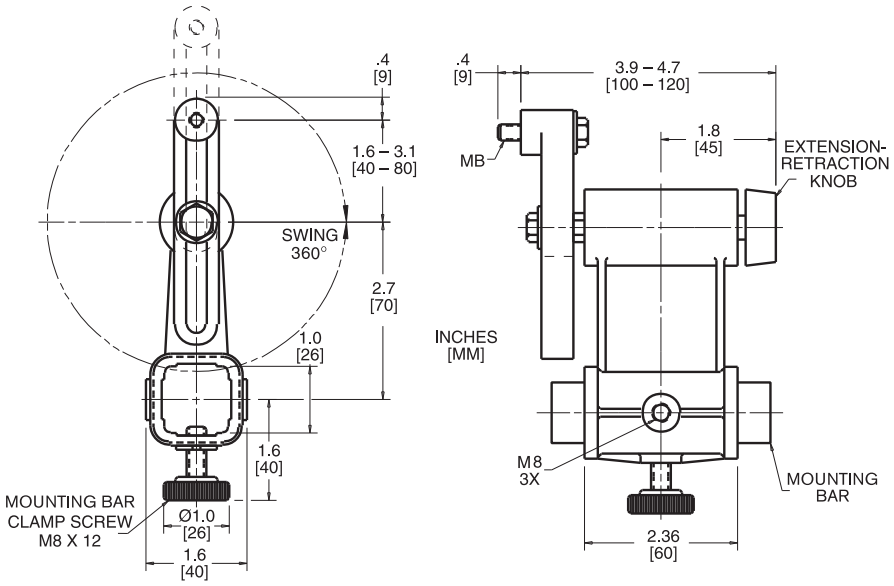

WEB GUIDING SENSORS

The Eyes of the Web Guiding System

Dimensions

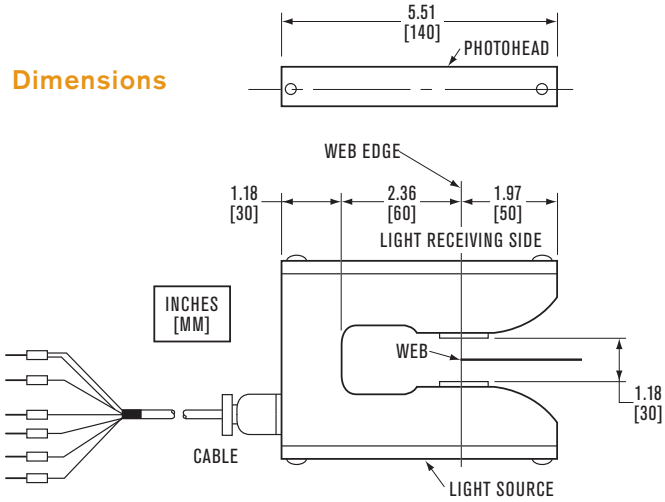

PH 16 Opaque edge sensor

Product Number 912085

For sensing opaque web edges. It uses an infrared pulsed LED light source, to eliminate problems caused by ambient light. Because of its wave length (950nm) it is also usable with photo sensitive film or paper.

PH 16 is provided with a mounting bracket featuring a micro adjustment screw for fine adjustment.

Specifications

Space between emitter and receiver..... 1.18 in. (30 mm)
Measuring width ..... ± .20 in. (± 5,08 mm)
Cable length ..... 16 ft. (5m)
Light source..... Pulsed light emitting diode (LED)
Light source wavelength..... 950 nm (Near infrared)
Weight..... 2.5 lb. (1,1 kg)
Body material ..... Diecast aluminum alloy
Exitation..... 12 VDC@ 40mA
Output Voltage ..... 0-350 mV
Sensitivity ..... 0.004 in. (0,1 mm)
Temperature Range ..... 32-122° F (0-50° C)

Dimensions

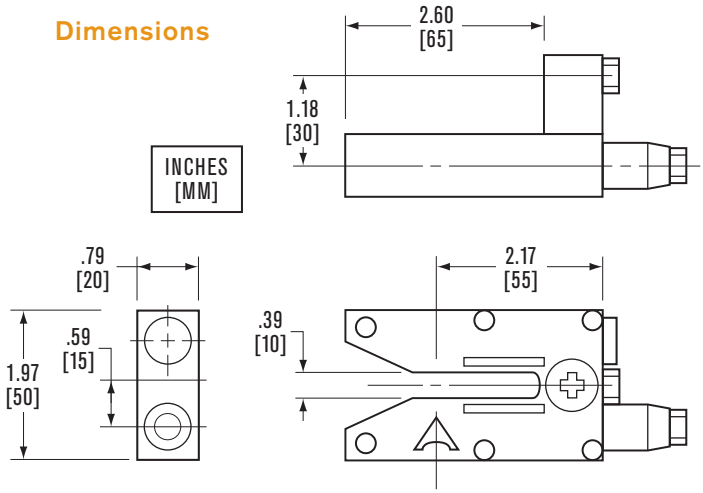

PH 21 Opaque edge sensor

Product Number 912626

The PH 21 is a photo electric edge sensor for webs. One PH 21 can be used for sensing either side of the web for Edge Position Control or EPC™. Two PH 21's one on each side of the web, can be used for Center Position Control or CPC™. The PH 21 senses edge position with a pulsed light emitting diode (LED), in the infrared range. This light source is not affected by ambient light.

The PH 21 is a miniaturized version of the PH 16. It is primarily used to position a sensor in a dimensionally restricted area.

PH 21 is provided with a mounting bracket featuring a micro adjustment screw for fine adjustment.

Specifications

Measuring range..... ± .20 in. (± 5,08 mm)
Cable length..... 16 ft. (5m)
Light source ..... Pulsed light emitting diode (LED)
Light source wavelength ..... 950 nm (Near infrared)
Weight..... 1.3 lb. (0,6 Kg)
Body material..... Diecast aluminum alloy
Exitation..... 12 VDC @ 40 mA
Output Voltage ..... 0-350 mV
Sensitivity ..... 0.004 in. (0,1 mm)
Temperature Range ..... 32-122° F (0-50° C)

WEB GUIDING SENSORS

The Eyes of the Web Guiding System

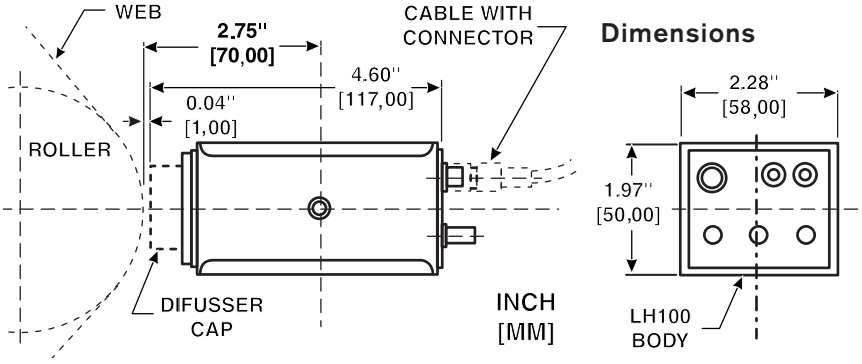

LH 100 Line Follower Sensor

Product Number 912119

This sensor reflects light off a web and receives it back in the same sensor housing as the light emitter. The light source is an array of red and blue LED's. Superior optics allow following very low contrast guide lines as well as pattern edges. The LH 100 has a self focusing feature to simplify calibration. It can be used for sensing printed lines, pattern edges (either left or right) and for edge sensing either transparent or opaque webs.

LH 100 is provided with a mounting bracket featuring a micro adjustment screw for fine adjustment.

Specifications

Detection line width		0.008" [0,2 mm] or greater (may differ depending on color or gradation of the line.)
Field of View		0.1"/0.2"/0.4" [2,5/5/10 mm] diameter (selectable)
Resolution		0.0005" [14µm]
Light receiving element		CCD linear image sensor.
Light source.		High luminance LED (2 colors; blue and red)
Power supply		+15V DC, 300 mA, -15V DC, 50 mA
Output	Position Signal	Detection Field View 2.5 mm (0.2 mV to 0.4 mV low) (2.0V DC to 3.2V DC high).
		Detection Field View 5 mm (0.2 mV to 0.5 mV low) (1.4V DC to 3.8V DC high).
		Detection Field View 10 mm (0.9 mV to 0.6 mV low) (0.1mV to 5.1V DC high).
	Actuator/Lock Signal	Open collector 30V, 0.1A or less ON when the target is lost from the field of view.
Mass		LH100: 1.3 Lb. [0.6 kg] (Including cable). Mounting Bracket: 1 Lb. [0.5kg]
Attached cable length.		16 Ft. [5m]
Ambient temperature		32° to 122°F [0° to 50° C]

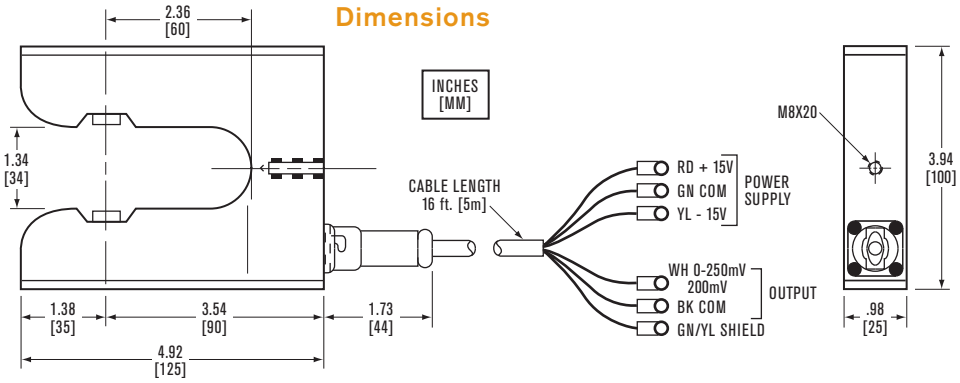

UH 21 Ultra Sonic Sensor

Product Number 912621

The UH 21 senses opaque or transparent edges, even if the transparent film has coating or printing which on occasion reaches the edge of the film. Because the sensing medium is ultra-sonic, the UH 21 is ideally suited for use with any photo sensitive material.

UH 21 is provided with a mounting bracket featuring a micro adjustment screw for fine adjustment.

Specifications

Center frequency ..... 220 KHz
Sensor gap ..... 1.34 in. (34 mm)
Effective sensing gap ..... 1 in. (25 mm)
Measuring width ..... .0.12 in. (3 mm)
Cable length ..... 16 ft. (5m)
Weight ..... 1 lb. (0,5 Kg)
Ambient temperature..... 32° F–120° F (0° C–50° C)
Sensitivity ..... 0.004 in. (0,1 mm)
Output Voltage ..... 0-200 mV
Current Consumption ..... 45 mA
Power Supply ..... +15 VDC, -15 VDC

CENTER PIVOT WEB GUIDES

Controlled alignment for reduced scrap, increased line speeds and improved roll quality.

Center Pivot Web Guides

Web guiding without side-to-side distortion or wrinkling.

Center Pivot Web Guides won't cause wrinkling because they don't create the side-to-side tension variations that end pivot guides do. Also, unlike end pivot guides, they can operate when mounted in any position.

Center pivot guiding is the kindest to your webs. Its configuration generally requires smaller lead-in and lead-out distances than end pivot guiding. Proper correction takes fewer degrees of roll movement. Less web movement means less stress on the web and a shorter lead-out distance is needed to stabilize tension. This makes the whole guiding system more compact and reduces "hunting" and over-correcting that requires slower web speeds and increases waste.

Applications

- ***Mid-process***
- ***Web converting***
- ***Web printing***
- ***Web slitting***
- ***Web coating***

Choose from 3 styles

The Self-Contained Center Pivot Web Guide models have a Nexen linear actuator, automatic centering sensor, controller and web guide sensor built right into the guide roll mechanism. You simply mount it and provide 100-240 VAC power.

The Small Free Standing Web Guides have an actuator and automatic centering sensor built into the guide roll mechanism. These models come in standard roll lengths of 9" (229mm), 12" (305mm) and 15" (381mm), and require a 16 foot (5M) interface cable.

The Large Free Standing Web Guides also have a built-in actuator, an automatic centering sensor and include a 16 foot (5M) interface cable. They come in standard roll lengths of 18" (457mm), 21 (533mm), 24" (610mm), 28" (711mm) and 32" (813mm). The Free Standing models let you choose from a wide range of sensors and controllers to best suit your application.

Features and Benefits

- Self-contained guides are a complete package and completely pre-wired. Simply mount and supply 100-240 VAC.
- Web correction without wrinkles. These guides make the proper corrections to keep your web at highest speeds with the least amount of stress.
- Optional roll finishes accommodate materials with differing coefficients of friction, such as polished films and rubber sheets.
- Completely U.S.A. made.
- Ideal for tight installations because they operate when mounted in any position.
- Complete technical support and field service available.
- A complete line of sensors, tension control systems and tension control clutches and brakes from Nexen let you match components and systems that best meet your needs.

How Nexen gives you worry-free, wrinkle-free web guiding.

Nexen Center Pivot Web Guides let you run your web with minimal waste and set-up because you make corrections on-the-fly at high speeds.

Corrections are made without side-to-side tension distortions that cause wrinkles. This also minimizes web stress that can cause web breaks.

Operation and installation are simple. The web guides can operate when mounted in any position (Figure 1). Entry guide rolls and exit guide rolls are part of the web guide mechanism.

Lead-in and lead-out rolls are customer supplied (Figure 2). Calculate lead-in and lead-out distances and mount the web guide. Lead-in and lead-out distances should be at least as long as the web width. Preferably, these distances are 1.25 times the web width.

On the Free Standing Web Guides, mount the sensor between the exit guide roll and the lead-out guide roll (Figure 2). The sensor is already properly mounted in the Self-Contained Web Guides.

The web always enters the unit on the pivot side and exits on the sensor side.

Large Free Standing Center Pivot Web Guide

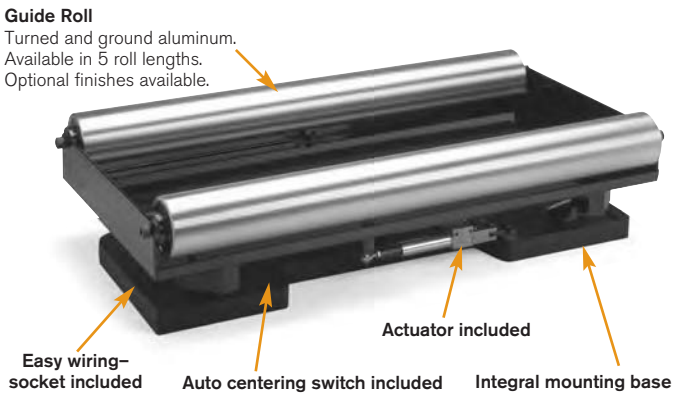

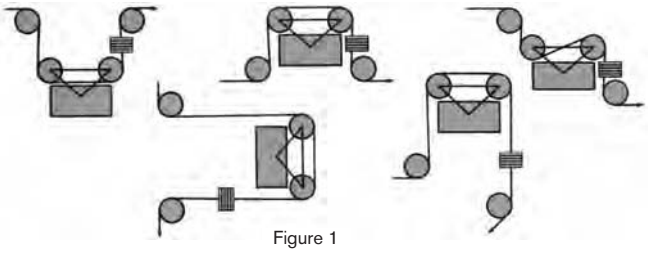

Figure 1

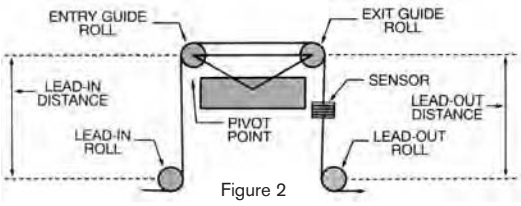

Figure 2

LARGE CENTER PIVOT WEB GUIDES

Controlled alignment for reduced scrap, increased line speeds and improved roll quality.

Large Center Pivot Web Guides
Specification Chart

Available Roll Widths	18"(457mm), 21"(533mm), 24"(610mm), 28"(610mm), 32"(813mm)
Standard Roll Finish	Turned and ground Aluminum
Optional Roll Finishes	Coatings & Coverings: Hard-coated aluminum, mirror-finish hardcoat,electroless nickel plating, chrome plating, rubber covering, matte finish.
Motor Specifications	1 inch (25 mm)/second standard, 24 V DC
Sensor	PH 16 standard

If other options are desirable, please call factory for availability.

External Dimensions
Self-Contained and Large Free Standing Center Pivot Web Guides

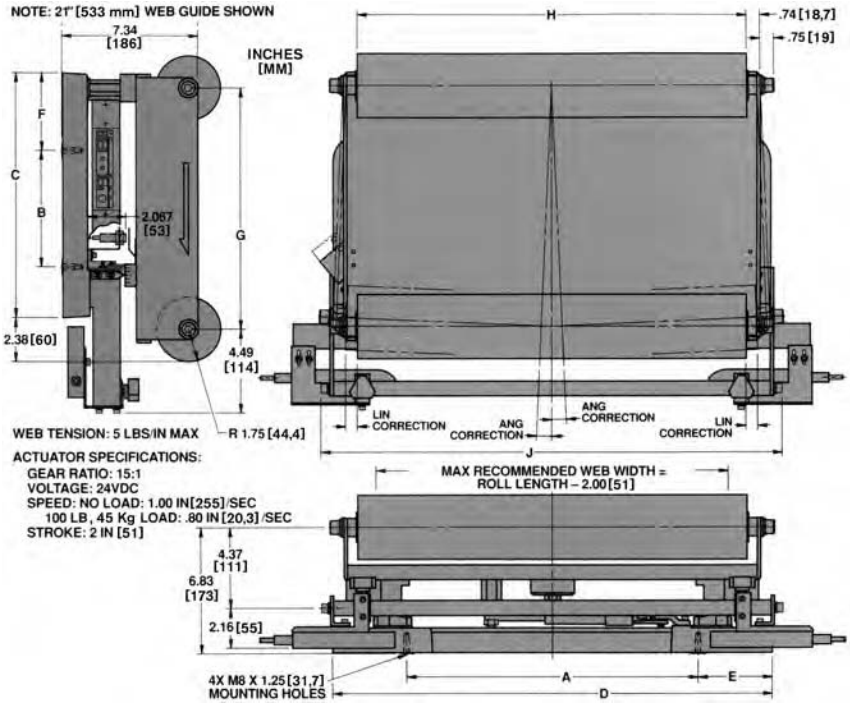

MODEL		PRODUCT NUMBER	CORRECTION* ANG	CORRECTION* LIN	A	B	C	D	E	F	G	H	J
18" [457 mm] WEB GUIDE	RT AE 120, LT SENSOR	964100	3.00°	0.78 [20]	17.00 [432]	7.50 [191]	13.24 [336]	20.77 [515]	1.89 [48]	4.20 [107]	13.05 [331]	18.00 [457]	21.92 [557]
	LT AE 120, RT SENSOR	964101											
	RT AE 120, 2 SENSORS	964102											
	LT AE 120, 2 SENSORS	964103											
	FREE STANDING W/O AE 120 & SENSORS	964104	4.50°	1.16 [29]									N/A
21" [533 mm] WEB GUIDE	RT AE 120, LT SENSOR	964110	2.50°	0.68 [17]	15.75 [400]	6.30 [160]	13.24 [336]	23.77 [604]	4.01 [102]	4.20 [107]	13.05 [331]	21.00 [533]	24.92 [633]
	LT AE 120, RT SENSOR	964111											
	RT AE 120, 2 SENSORS	964112											
	LT AE 120, 2 SENSORS	964113											
	FREE STANDING W/O AE 120 & SENSORS	964114	4.10°	1.06 [27]									N/A
24" [610 mm] WEB GUIDE	RT AE 120, LT SENSOR	964120	2.20°	0.57 [14]	15.75 [400]	6.30 [160]	13.24 [336]	23.77 [604]	4.01 [102]	4.20 [107]	13.05 [331]	24.00 [610]	27.26 [692]
	LT AE 120, RT SENSOR	964121											
	RT AE 120, 2 SENSORS	964122											
	LT AE 120, 2 SENSORS	964123											
	FREE STANDING W/O AE 120 & SENSORS	964124	4.70°	1.22 [31]									N/A
28" [711 mm] WEB GUIDE	RT AE 120, LT SENSOR	964130	1.90°	0.55 [14]	27.00 [686]	9.50 [241]	15.24 [387]	31.77 [807]	2.39 [61]	4.45 [113]	15.05 [382]	28.00 [711]	32.92 [836]
	LT AE 120, RT SENSOR	964131											
	RT AE 120, 2 SENSORS	964132											
	LT AE 120, 2 SENSORS	964133											
	FREE STANDING W/O AE 120 & SENSORS	964134	4.05°	1.19 [30]									N/A
32" [813 mm] WEB GUIDE	RT AE 120, LT SENSOR	964140	1.65°	0.48 [12]	27.00 [686]	9.50 [241]	15.24 [387]	31.77 [807]	2.39 [61]	4.45 [113]	15.05 [382]	32.00 [813]	35.26 [896]
	LT AE 120, RT SENSOR	964141											
	RT AE 120, 2 SENSORS	964142											
	LT AE 120, 2 SENSORS	964143											
	FREE STANDING W/O AE 120 & SENSORS	964144	4.05°	1.19 [30]									N/A

SMALL CENTER PIVOT WEB GUIDES

Controlled alignment for reduced scrap, increased line speeds and improved roll quality.

9"(229mm) & 12"(305mm) Web Guides

Nexen Center Pivot Web Guides are engineered to provide excellent web positioning at mid-process locations, eliminate wrinkling, allow maximum flexibility in component location, and enhance ease-of-operation.

Selecting a Web Guide is Easy

1. Determine the roller face length you require. Typically, this is 2" (100 mm) greater than the width of your web. These guides have roll faces from 9" to 12".(229 mm to 305 mm) Consult your Nexen representative for other sizes.

2. Select a controller. Available options currently available are:
   - AE 120 Self-contained for compact mounting of the controller integral with the guide.
   - AE 120 Separate—The same controller, but mounted remotely. (Order controller separately.)
   - GC 300—Full function controller to handle international power requirements and/or unusual sensor requirements. (Order GC 300 separately.)

3. Select Controller mounting (applicable to AE 120 self-contained only). Choices are:
   - Controller mounted on the left or right side, referenced to the direction of web travel.
   - Controller mounted normally, or inverted. In an inverted mounting position, the rollers are below the base. (See dimensional drawing).

4. For free-standing applications (where the controller is ordered and mounted separately from the guide) select the necessary cable length. Available lengths are 16' (4,88M) and 35'(10,67M). No cable is required for self-contained units. They come totally pre-wired.

5. Select a sensor:
   - None—If you want to mount the sensor remotely from the guide. (Order your sensors separately.)
   - PH 16—LED-based sensor for paper and similar opaque material.
   - UH 21— Ultrasonic sensor for transparent material and paper.

6. For configurations that include sensor (i.e. either the PH 16 or the UH 21 in Step 5), select the sensor mounting.

   Available choices are:
   - Left—to have the sensor mounted on the left side (looking in the direction of the web travel).
   - Right—to have the sensor mounted on the right side.
   - Both—to have two sensors mounted one each side for center guiding applications.

Product Selection Guide and Ordering Information

Determining the product number for your configuration
Example: WG-9-A-LN-NA-U-R

Roller Size	Controller	Control Mounting	Cable Length	Sensor	Sensor Mounting
9"	A = AE 120 Self-Contained	LN = Left Normal	NA = None	N = None	N = None
12"	E = AE 120 Separate	RN = Right Normal	16 = 16 feet long	P = PH 16 LED	L = Left
	F = GC 300 Mounted Separate	LI = Left Inverted	35 = 35 feet long	U = UH 31 Ultrasonic	R = Right
		RI = Right Inverted			B = Both
		NA = Not Applicable			

Please use the Web Guide Product List on the next page to specify any configuration not listed here.

SMALL CENTER PIVOT WEB GUIDES

Controlled alignment for reduced scrap, increased line speeds and improved roll quality.

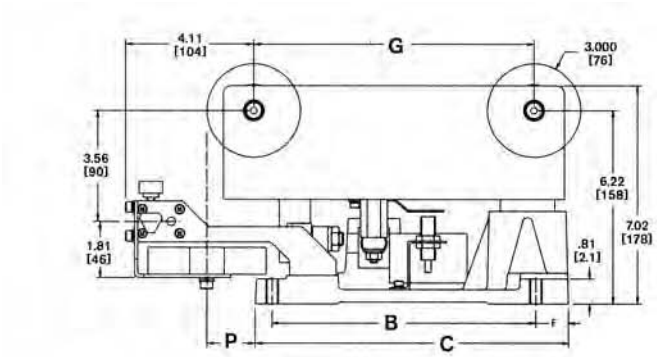

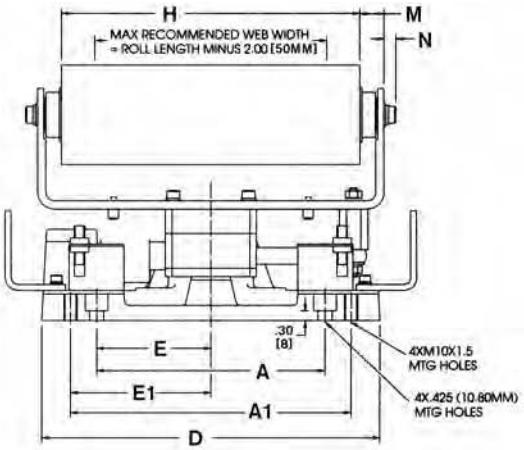

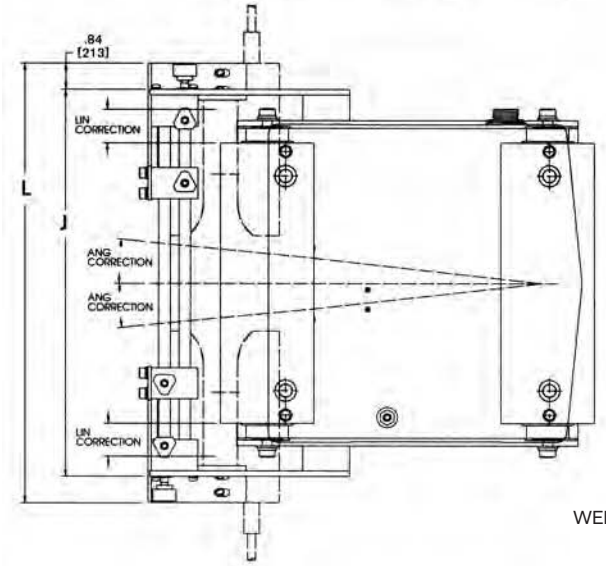

Web Guide Inverted Position

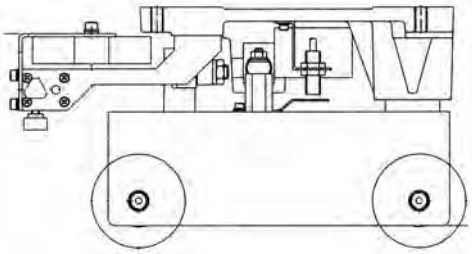

WEB TENSION: 5 LBS/IN MAX

ACTUATOR SPECIFICATIONS:
GEAR RATIO: 15:1
VOLTAGE: 24V DC
SPEED: NO LOAD: 1.00 IN/SEC
STROKE: 2 IN

9"(229mm) & 12"(305mm) Web Guide Dimensions

MODEL	CORRECTION* ANG	CORRECTION* LIN	A	A1	B	C	D	E	E1	F	G	H	J	L NOM**	L MAX	M	N	P
9" [229 mm] CENTER PIVOT	6.00°	1.06 [27]	6.890 [175]	8.465 [215]	8.465 [215]	10.05 [255]	10.20 [259]	3.44 [87,4]	4.23 [107,4]	1.04 [26]	9.000 [229]	9.000 [229]	12.40 [315]	14.08 [358]	16.68 [424]	0.72 [18]	0.36 [9]	1.54 [39]
12" [305 mm] CENTER PIVOT	6.00°	1.36 [35]	9.890 [251]	11.465 [291]	11.465 [291]	13.05 [331]	13.20 [335]	4.94 [87,4]	5.73 [107,4]	1.04 [26]	12.000 [305]	12.000 [305]	15.40 [391]	17.08 [434]	19.68 [500]	0.72 [18]	0.36 [9]	1.54 [39]

Small Center Pivot Web Guides Sample Product list

Product Number	Roll Width	Controller	Sensor	Configuration Number
964220	9	AE 120, Left	PH 16	WG-9-A-LN-NA-P-L
964221	9	AE 120, Right	PH 16	WG-9-A-RN-NA-P-R
887003	9	GC 300, Not Included	PH 16	WG-9-F-NA-16-P-R
887010	9	AE 120, Not Included	UH 21	WG-9-E-NA-16-U-L
887000	12	AE 120, Right	PH 16	WG-12-A-RN-NA-P-R
887001	12	AE 120, Left	PH 16	WG-12-A-LN-NA-P-L
887002	12	AE 120, Left, Inverted	PH 16	WG-12-A-LI-NA-P-L
887009	12	AE 120, Right	PH 16	WG-12-A-RN-NA-P-L

Product Number	Roll Width	Controller	Sensor	Configuration Number
887011	12	AE 120, Right	PH 16	WG-12-A-RN-NA-P-B
887012	12	AE 120, Left	PH 16	WG-12-A-LN-NA-P-R
887017	12	AE 120, Left	UH 21	WG-12-A-RN-NA-U-R
887005	12	AE 120, Not Included	PH 16	WG-12-A-RN-NA-P-R
887013	12	GC 300, Not Included	PH 16	WG-12-F-NA-16-P-L
887014	12	AE 120, Not Included	UH 21	WG-12-E-NA-16-U-R
887111	12	AE 120, Not Included	PH 16	WG-12-E-NA-16-P-B
887112	12	GC 300, Not Included	PH 16	WG-12-F-NA-16-P-R

Please use the Configuration Guide on previous page to specify any configuration not listed here.

LINEAR ACTUATORS

Accurate, positioning of roll stands for web guiding applications

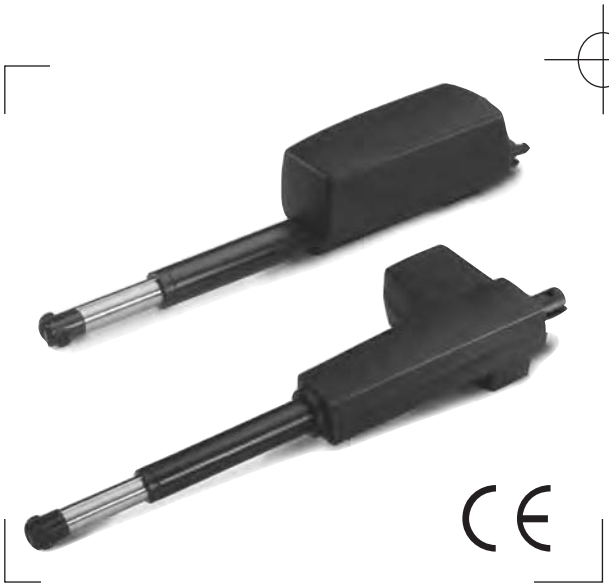

Linear Actuators Specifications

Product Number	Speed Per Sec. Inches [mm]	Thrust lbs. [newtons]	Stroke inches [mm]	Power volts amps	Environ-mental Protection Rating
912730	.35 [8,89]	600 [2669]	4 [100]	24 VDC 4.5 max	IP51*
912731	.35 [8,89]	600 [2669]	6 [150]	24 VDC 4.5 max	IP51*
912732	.35 [8,89]	600 [2669]	12 [300]	24 VDC 4.5 max	IP51*
912733	.39 9,91	900 4000	8 200	24 VDC 4.5 max	IP51*
912734	.39 9,91	900 4000	12 300	24 VDC 4.5 max	IP51*

* Protected against the ingess of dust and dripping water

Linear Actuators

Nexen's Linear Actuators provide the thrust that is required to move an unwind stand, a wind up roll stand or to convert an existing hydraulically actuated web guiding mechanism to electrical actuation.

Nexen's Linear Actuators are available in several models with different strokes.

To ensure optimum response and accuracy, roll stands should be mounted on linear ball bearings. Sliding ways and wheel track systems have higher coefficients of friction which requires greater break away thrust. Greater break away thrust prevents accurate, minute corrections.

CAUTION–Do NOT use the Linear Actuator for Radial (side) loads. The Linear Actuator is designed for axial (thrust) loads ONLY.

MAINTENANCE
Apply a few drops of light machine oil to the actuating rod. The frequency in which the Linear Actuator will require lubrication depends upon the working environment.

Features:

- 24 VDC permanent magnet motor
- Built-in, end limit switches
- Strong plastic housing protects motor and gear.
- Scratch-and wear-resistant powder painted outer tube
- Elegant and compact design with small overall dimensions
- 2000 mm (78.74") straight cable with DIN plug
- Protection class: IP51
- Ambient temperature: +41°F [5.0°C] to +104°F [40.0°C]
- Black in color
- Steel piston rod eye
- Zinc alloy back fixture
- CE marked

Limit Switch Adjustments

Linear Actuator Product Numbers 912730, 912731, 912732

These actuators have adjustable internal limit switches If there is a physical obstruction or stop, then the Limit Switches can and must be adjusted to interrupt the Linear Actuator's movement before contact is made with the physical obstruction or stop.

If there is no physical obstruction to travel, then the Limit Switches may be left in their factory set default positions.

Linear Actuator Product Numbers 912733, 912734

These actuators have nonadjustable internal limit switches that are factory pre-set for the maximum stroke length. For applications that require less than the maximum stroke, an external limit switch connected to the web guide controller, must be installed.

If there is a physical obstruction or stop that prohibits the use of the maximum stroke length, then an external limit switch MUST be installed to interrupt the Linear Actuator's movement before contact is made with the physical obstruction or stop.

Failure to use an external limit switch will damage both the Linear Actuator and the web guiding mechanism.

If there is no physical obstruction to travel, then the nonadjustable, internal limit switches may be used in their default position for maximum stroke length.

Failure to use and adjust Internal or External Limit Switches properly, can damage both the Linear Actuator and the Web Guiding Mechanism.

LINEAR ACTUATORS

Accurate, positioning of roll stands for web guiding applications

Linear Actuator Dimensions

Product Number	Description	Stroke	Dimension "X"
912730	Linear Actuator 600	4 [102]	14.68 [372,9]
912731	Linear Actuator 600	6 [152]	16.68 [423,7]
912732	Linear Actuator 600	12 [305]	22.68 [576,1]

Product Number	Description	Stroke	Dimension "X"
912733	Linear Actuator 900	8 [203]	15.18 [385,6]
912734	Linear Actuator 900	12 [305]	18.93 [480,9]

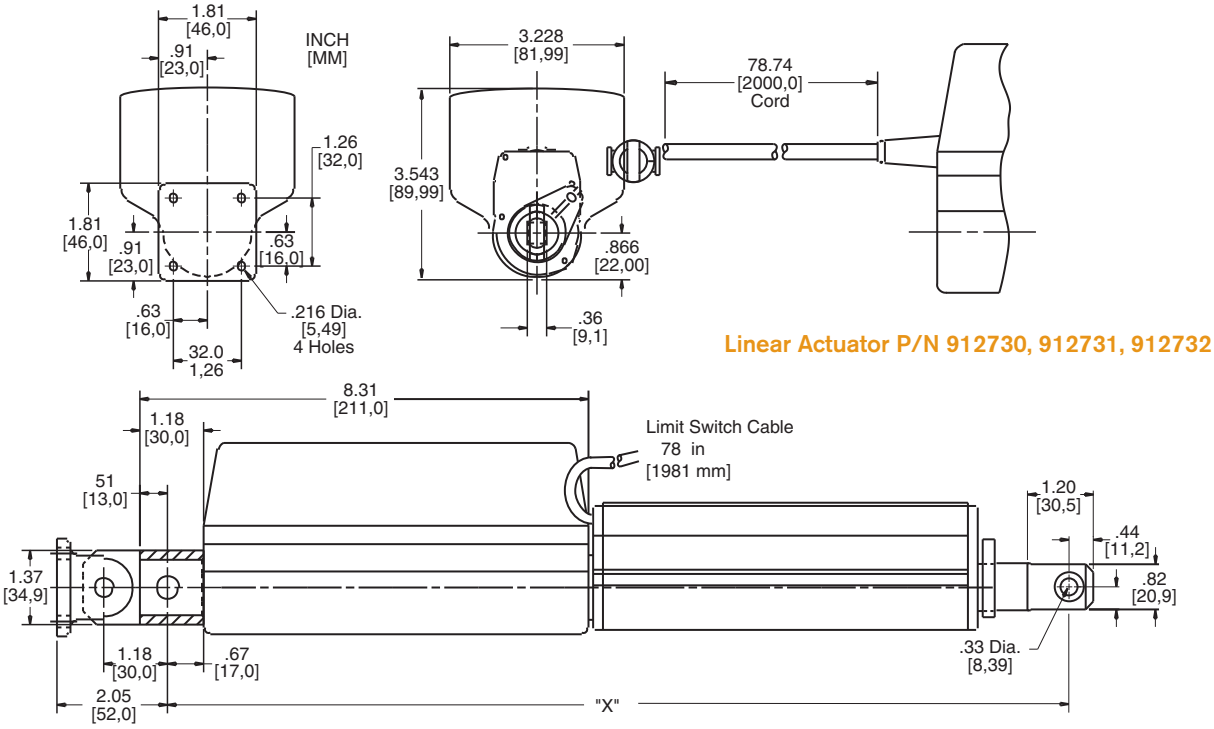

Linear Actuator P/N 912730, 912731, 912732

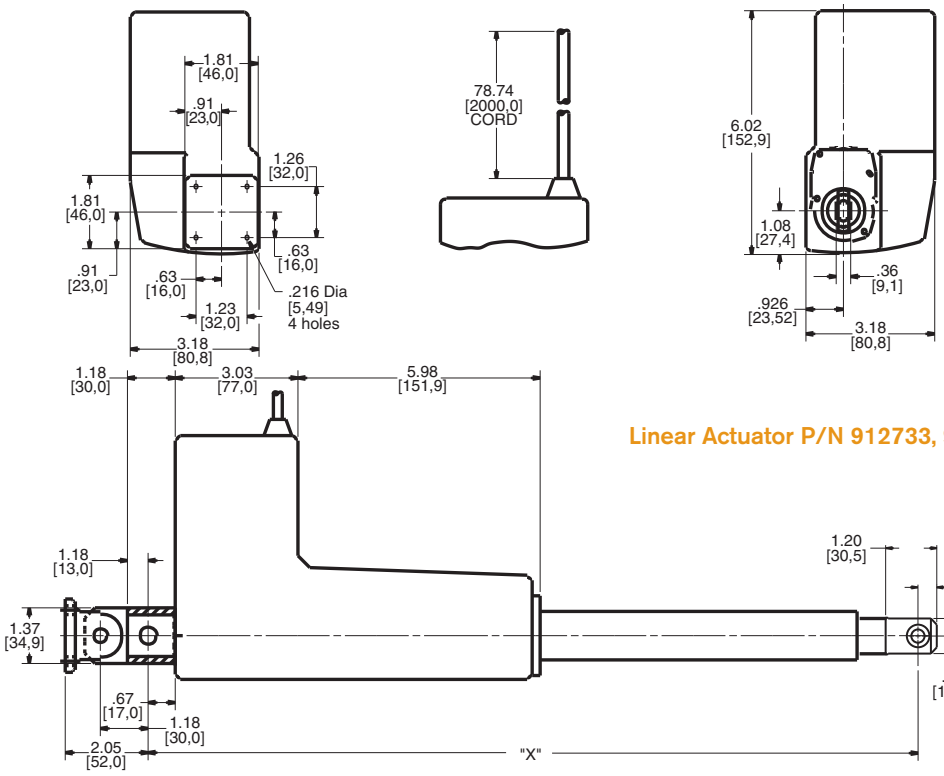

Linear Actuator P/N 912733, 912734

TA 100B/TA 110B TRANSDUCER AMPLIFIERS

Superior signal conditioning for web position sensors.

TA 100B and TA 110B Transducer Amplifiers

Designed to interface with one PH 16 or UH 21 Web Guide Sensor to provide a 0-10 VDC or 4-20mA indication of the position of the web edge.

Used where a position feedback signal is needed to close a control loop; or where position indication only is required, without control.

These amplifiers are ideal when you need low cost, accurate web position indication interfaced with machine controls. Applications include input for data loggers, process controllers. Host computers or other applications that require a precise tension interface.

Choose chassis-mount model for concealed OEM installations.

The chassis-mount style of the TA110B makes it ideal for installations in cabinets or enclosures.

Choose fully enclosed model for easy retrofit.

The TA 100B comes complete with a NEMA-12 enclosure, making is a good choice when adding on to an existing tension control drive or other retrofit installation.

Specifications

Model	TA 100B - 110 VAC, Enclosed	**Product Number**	964414
Model	TA 110B - 110 VAC, Chassis	**Product Number**	964415

Input power	110 VAC, 50/60 Hz, 1 Phase; Prewired 8 ft. [2.4 m] power cord for TA 100B
UL and ULC Listed	Enclosed model only
Sensor compatibility	Any Nexen PH 16 or UH 21 Web Position Sensor
Outputs	0–10 VDC, 4–20 mA
Operating temperature	50°F to 120°F (10°C to 50°C)
Operating humidity	10% to 90% relative non-condensing
Storage temperature	-30°F to 150°F (-35°C to 65°C)
Storage humidity	10% to 90% relative non-condensing

Dimensions TA 100B

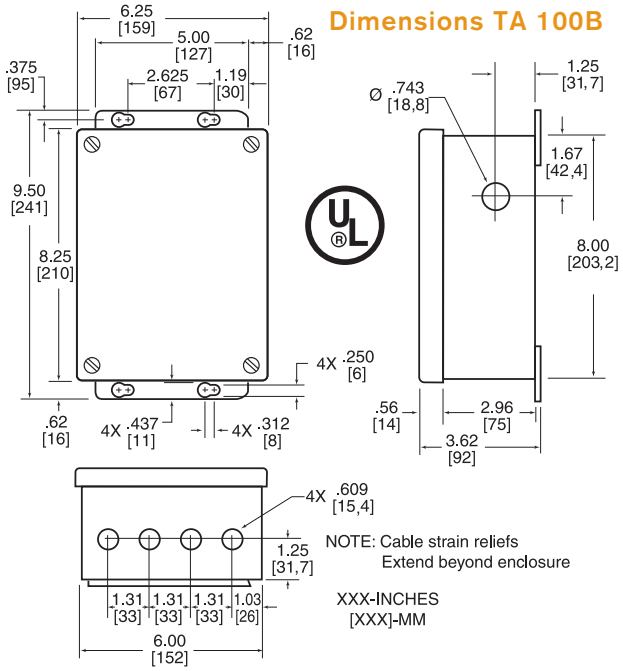

Dimensions TA 110B

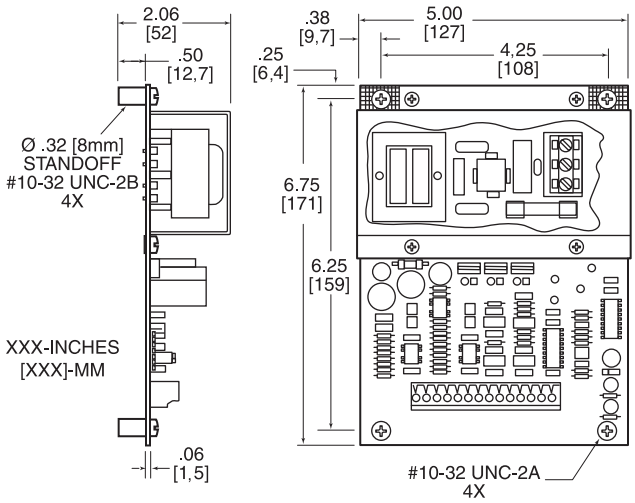

In accordance with Nexen's established policy of constant product improvement, the specifications contained in this document are subject to change without notice. Technical data listed in this document are based on the latest information available at the time of printing and are also subject to change without notice. For current information, please consult:
www.nexengroup.com

AUXILIARY EQUIPMENT

This Section Contains: . . . . .Page

AUXILIARY EQUIPMENT
Safety Chuck 336-337
Paper Checker PC 210 338
Splice Detector System 339

Safety Chuck

Nexen's line of rugged safety chucks provide roll shaft support and torque transmission at a low cost. The maintenance-free design ensures optimal performance throughout the life of each safety chuck. Nexen's units safe-guard your equipment by securing the roll shaft in place during any wind or unwind operation. Our safety chucks will only open with the socket in the upright position.

Available for either foot or flange mounting, these safety chucks complement Nexen's dependable line of tension control brakes, clutches and electronic tension control systems, offering you a complete package with seamless installation and operation.

Features and benefits

- Redundant safety mechanisms securely lock shaft in place
- Long, maintenance-free life
  - Durable construction
  - Cast iron housing
  - Chrome plated, steel hand wheel
  - Shaft socket hardened to Rockwell 56C
- Available in ready-to-assemble brake packages
- Manual unlock for most models
- Free turning precision ball bearings
- Finger guards on all models
- Shaft extensions with keyway
- Foot or flange mounting
- Metric size sockets available upon request

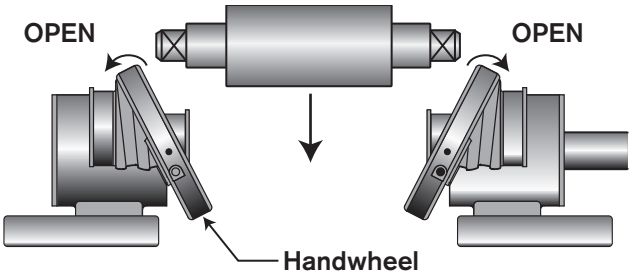

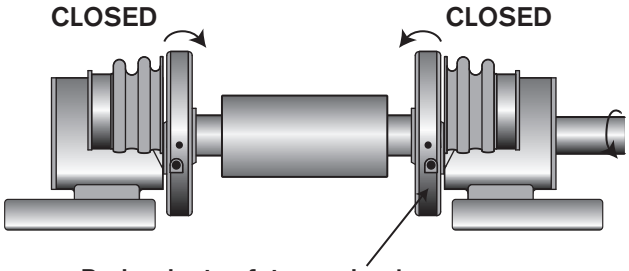

Redundant safety mechanism locks the handwheel closed during rotation.

Nexen's easy to use safety chucks increase productivity by allowing for quick roll changes. Simply push the handwheel open to insert or remove a roll, then push closed to secure the roll in place.

These quick couplings are an essential part of any web operation, adding ease and safety to your process with minimal cost and no maintenance required.

Safety Chuck Specifications

Type	Model	Socket Type	Max Socket Size	Stocked Socket Size	Stocked Shaft Length	Safety Buton	Maximum Weight per Pair	Max RPM	Max Torque	Shipping Weight
Light Duty Tilt Plate	CSB25 (foot or flange)	U (Square)	30 mm [1.25 in]	1.00 in 1.25 in	114,4 mm [4.50 in]	No	430 kg [950 lbs]	1300	122 Nm [90 ft-lbs]	Foot 5 kg [12 lbs] Flange 5 kg [10 lbs]
Medium Duty Tilt Plate	CSB50 (foot or flange)	U (Square)	30 mm [1.25 in]	1.00 in 1.25 in	127,1 mm [5.00 in]	No	839kg [1850 lbs]	1300	176 Nm [130 ft-lbs]	Foot 8 kg [16 lbs] Flange 7 kg [15 lbs]
	CSB75 (foot or flange)	U (Square)	50 mm [2.00 in]	1.25 in 1.50 in	142,9 mm [5.63 in]	Yes	1633kg [3600 lbs]	1300	339 Nm [250 ft-lbs]	Foot 14 kg [30 lbs] Flange 13 kg [29 lbs]
	CSB125 (foot or flange)	V (Square)	40 mm [1.50 in]	1.25 in 1.50 in	142,9 mm [5.63 in]	Yes	1360kg [3000 lbs]	1000	287 Nm [212 ft-lbs]	Foot 14 kg [31 lbs] Flange 14 kg [30 lbs]
Heavy Duty Tilt Plate	CSB150 (foot or flange)	U (Square)	50 mm [2.00 in]	1.25 in 1.50 in 1.50 in	143,0 mm [5.63 in]	Yes	3300kg [7275 lbs]	2000	1300 Nm [959 ft-lbs]	Foot 28 kg [61 lbs] Flange 27 kg [50 lbs]
	CSB175 (foot or flange)	U (Square)	80 mm [3.15 in]	2.00 in 3.00 in	143,0 mm [5.63 in]	Yes	8400kg [18500 lbs]	2000	2800 Nm [2065 ft-lbs]	Contact Factory

Brake Options

Nexen is committed providing easy-to-use mounting options to integrate our advanced brakes into your system. We offer brake adaptor plates that match each model to ensure superior design and seamless operation.

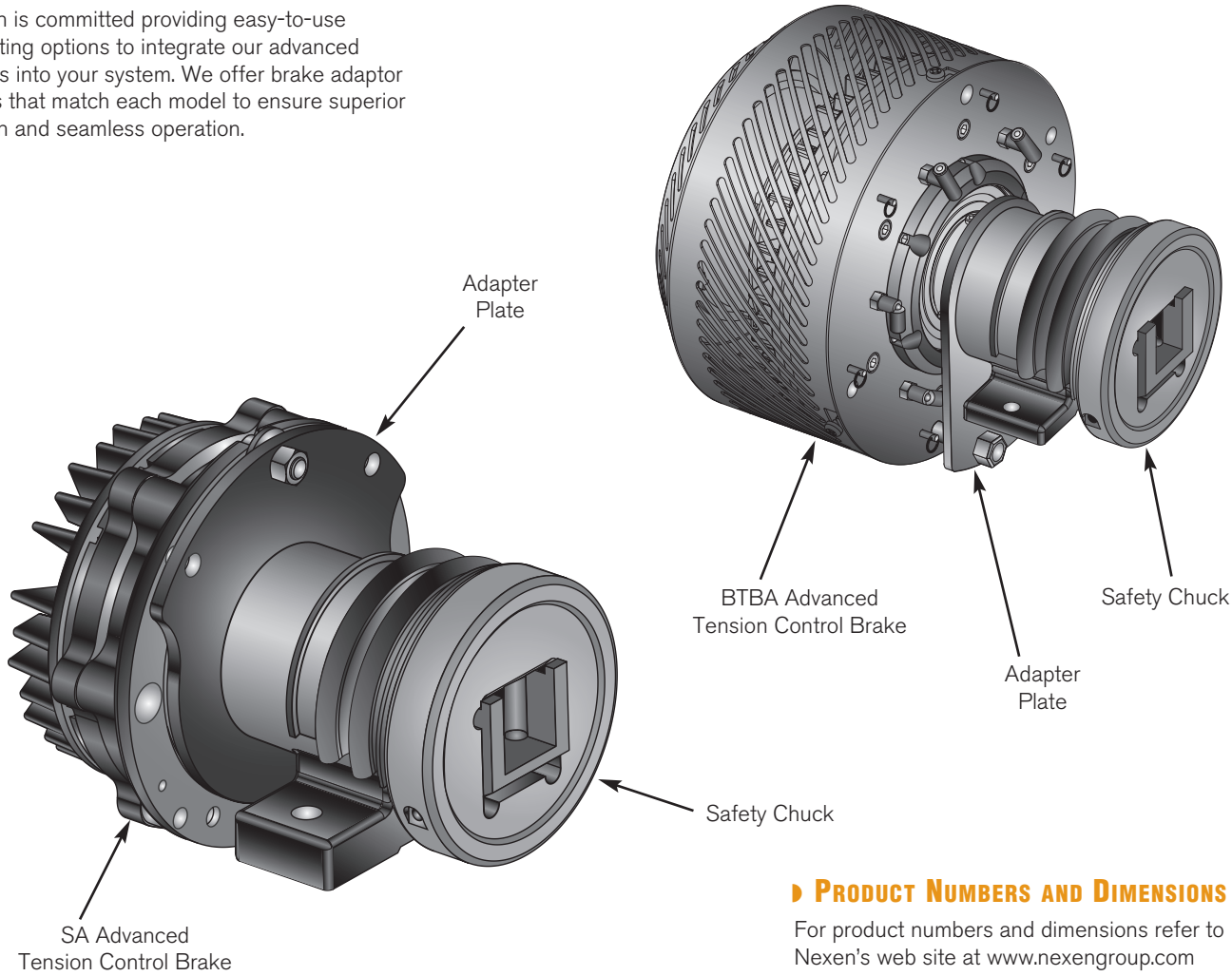

Product Numbers and Dimensions

For product numbers and dimensions refer to Nexen's web site at www.nexengroup.com

PAPER CHECKER – PC 210

Detects web breaks, splices and double sheet feeding.

Paper Checker – PC 210

The Paper Checker System detects web breaks and splices on web-fed machinery. It also detects double sheet feeding on sheet-fed machines.

When the system senses a splice, break or double sheet feed, an alarm indicator lights and a relay changes state (normally open or normally closed).

Main Applications

Web splice and break detection on rotary presses, slitters, laminators, coaters, winders and other machines running a web.

Double feed detection on sheet-fed presses, bag machines and laminators.

Features

- Non-contact sensing
- Wide range of web (sheet) thicknesses
- Senses all materials including paper, cellophane and polylaminates
- Ultrasonic sensing eliminates false triggering caused by printed characters or patterns
- Simultaneous detection of web splice and web break
- Color and material of splicing tape, and use of a butt splice or overlap splice do not affect splice detection
- Synchronous signal can be used to eliminate false triggering caused by web sag during web stop
- Self calibrating to new web thickness

How the System Works

The Paper Checker System has two parts—the PC 210 Paper Checker Control and the UH 200 or UH 215 Ultra-sonic Sensor, composed of a transmitter and receiver element.

The PC 210 provides an excitation signal to the transmitter and reads the return signal from the receiver. The PC 210 indicates machine-feed conditions through the front panel LEDs and contact closures. There are two sets of contacts: one for web splice or double feed and one for web break.

The ultrasonic signal enables the sensor to "see through" clear and opaque film, papers and laminates without false triggering that patterns or printing can cause when other types of sensors are used. It also recalibrates to a new web thickness when product is changed.

Specifications

Model	Product Number	Web Splice Detection	Web Break Detection	Two-Sheet Feed Detection	Sensor Specification	Common Specifications
PC 210 with UH 200	913071	Web Thickness 0.00004 to 0.031 in. (1µm to 0,8mm) Splice Width 0.787 in or more (20mm or more) Line Speed 3300 ft./min. (1000 m/min. or less)	Web Thickness 0.0019 to 0.031 in. (50µm to 0,8mm) Line Speed 3300 ft./min. (1000 m/min. or less)	Sheet Thickness 0.0019 to 0.031 in. (50µm to 0,8mm)	UH 200 40kHz frequency	Power Supply 100 to 240 VAC, 50/60 Hz Power Consumption 10 VA Output Contacts, Web Break and Web Splice/Double Feed Rating: 240 VAC, 01 A 24 VDC, 0.1 A Reset Time, Web Splice Double Sheet Contact 0.2 - 6 seconds Weight: Controller 0.91 lb. (2kg) Sensor 0.23 lb. (0.5kg) (one pair) Cable Length 16 ft. (5 meters)
PC 210 with UH 215	913072				UH 215 33.3 kHz frequency	

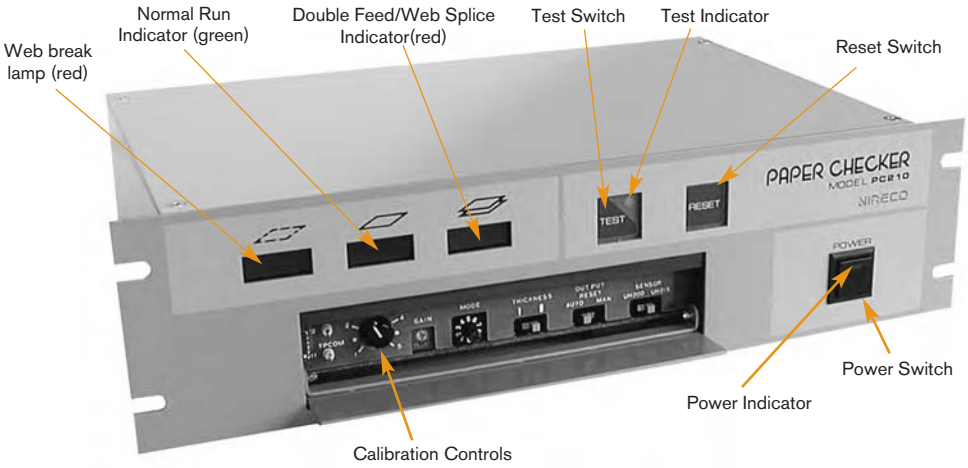

SPLICE DETECTOR SYSTEM

Senses splices or double thicknesses in translucent papers allowing splices to pass without web damage.

Nexen-Nireco

Splice Detector System

Senses splices or double thicknesses in translucent papers allowing splices to pass without web damage.

The Splice Detector System is a two component system composed of a JD 100 Splice Sensor and a JC 100 Splice Controller.

The JC 100 Splice Controller provides the excitation signal to the sensor and reads the return signal. The JD 100 displays a red LED "output" lamp, and changes the state of a normally open (N.O.) or normally closed (N.C.) relay, when a splice or double thickness is detected. The contact change lasts for about three seconds and then automatically returns to its normal state.

The Splice Detector System is ideally suited for use where high nipping pressures in a machine must be momentarily relaxed to allow a splice to pass through without damaging webs, blankets or other components.

The Splice Detector System normally operates with no operator input. Three seconds after a single thickness of web is inserted into the sensor gap, the controller calibrates itself to the web thickness. From then on, the system will give the alarm signal whenever the web thickness is exceeded, as by a splice or double sheet.

Presence of a new web thickness in the sensor gap for more than three seconds will cause the controller to recalibrate to the new web.

Features and Benefits

- Automatic recalibration to new web thickness—**needs no operator set up.**
- Incandescent lamp type sensor—**easy to visually check the lamp operation.**
- Web thickness is measured by light transmission—**no false triggering due to web flutter.**
- Circuitry designed for extra long lamp life and resistance to power fluctuation fading—**lower maintenance.**

Specifications

Supply Voltage:
115, 127, 220, 240 VAC

Power Supply Fuse:
250 VAC 0.1A slow blow

Output Contact Rating:
200 VAC, 2A

Output Time:
3 seconds (approximately)

Temperature Range:
32-122°F (0-50°C)

Detectable Web Thickness:
0.002" - 0.008" (0,05 to 0,2 mm) paper or equivalent

JC 100 Splice Controller Dimensions

Product Number 912602

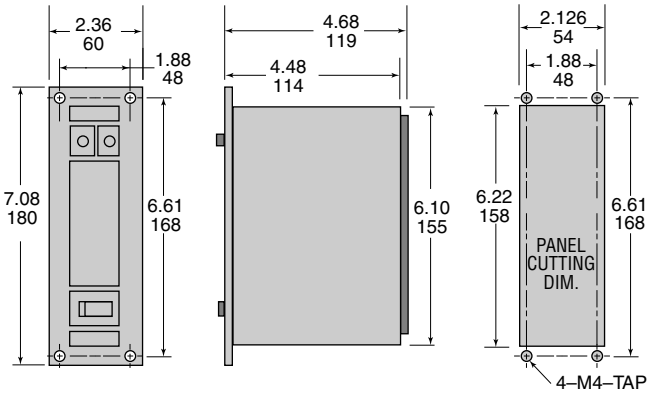

JD 100 Splice Sensor Dimensions

Product Number 912601

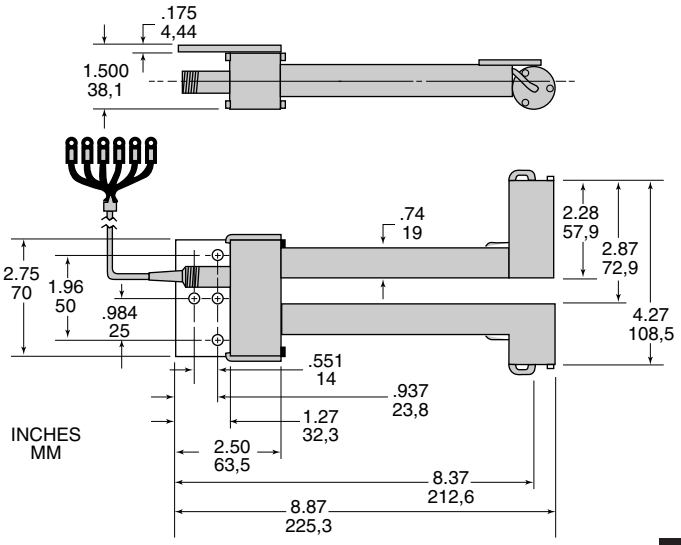

nexen

"Air Champ"

In accordance with Nexen's established policy of constant product improvement, the specifications contained in this document are subject to change without notice. Technical data listed in this document are based on the latest information available at the time of printing and are also subject to change without notice. For current information, please consult:
www.nexengroup.com

CLUTCH AND BRAKE CONTROLS

This Section Contains: . . . . .Page

CONTROLS

Overview 342
Filter, Regulator, Lubricator 342-343
3-Way Clutch or Brake Controls 344
Clutch or Brake Control Panel 344
Spool Controls 345
Clutch or Brake Flow Controls 346
Exhaust Muffler 346
3-Way Manual Control 347
Quick Exhaust/Shuttle Valve 347
Combination Overlap Eliminator 347
Typical Circuit Diagrams 348-351

The Nexen FRL System

- Modular.
- Simple, compact design.
- Easily serviced — no special tools required.
- Body shape allows regular mounting in any of four positions, at the 90° increments, relative to the filter and lubricator.
- Solid porting, .250" sizes.
- Threaded bowl attachment.
- Simple joining method uses standard machine screws.
- Designed to meet or exceed NFPA standards, and other international specifications.
- Regulator features non-rising, tamper-resistant adjusting knob.
- Metal bowls — standard.

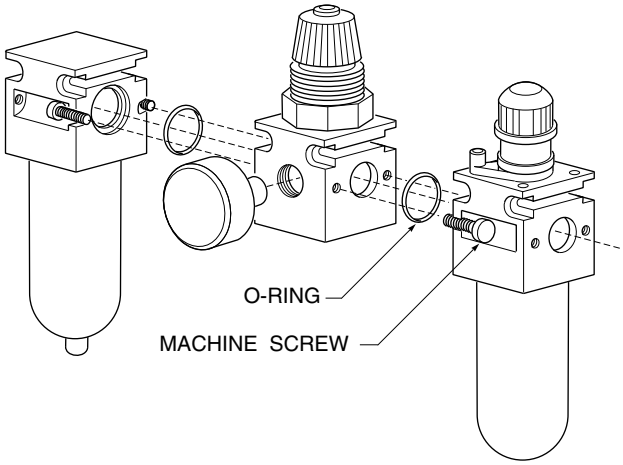

Filter

Self-sealing, plastic deflector — no gasket. One-piece molded element-retainer and baffle.

- Flow: 39.5 SCFM
- Port Size: .25" NPTF
- Temperature Range: 40°-180° F (4.4°-82.2°C)
- Pressure Range: 300 Psig Max. (20.4 Bars)
- Bowl Capacity: 1.5 oz. Std.
- Body: Zinc
- Bowl: Metal
- Drain: Manual Drain
- Filter Rating: 5 Micron
- Weight. per Unit: .91 lbs.

Product No. 939101

NOTE — All flows taken at 100 Psig inlet pressure, and 5 Psig pressure drop.

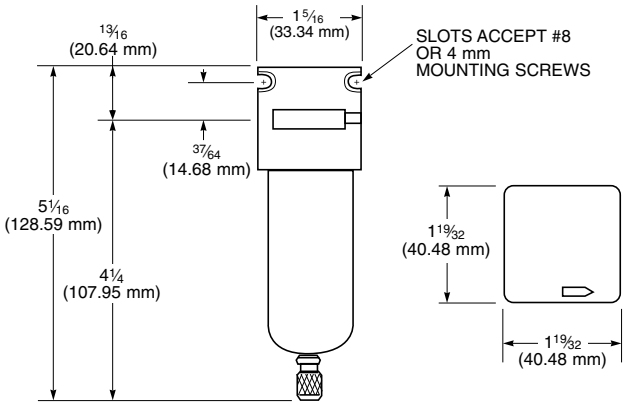

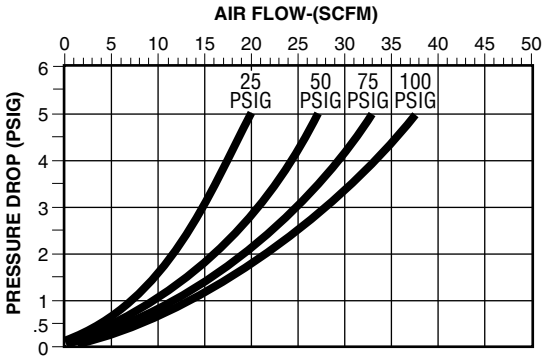

Regulator

Features non-rising adjustment knob. Aspirator for performance. Dual in-line gauge ports. Alignment system allows four different orientations. at 90° increments, relative to the filter and lubricator.

- Flow: 39.4 SCFM
- Port Size: .25" NPTF
- Supply Pressure: 300 Psig Max. (20.4 Bars)
- Pressure Range: 0-125 Psig (0-8.5 Bars) std.
- Temperature Range: 40°-120° F (4.4°-48.9°C)
- Piston Operated
- Relieving
- Body: Zinc
- Spring Cage: Celcon
- Bottom Plug: Celcon
- Adjustment Mech.: Locking Knob
- Weight per Unit: .824 lbs.

Product No. 940001

NOTE: Flows taken at 100 Psig inlet pressure, and 25, 50 and 75 Psig reduced pressures.

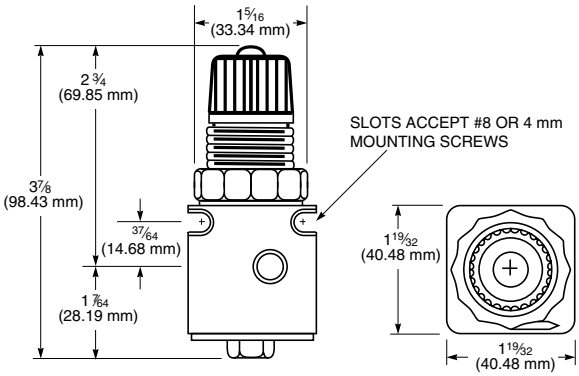

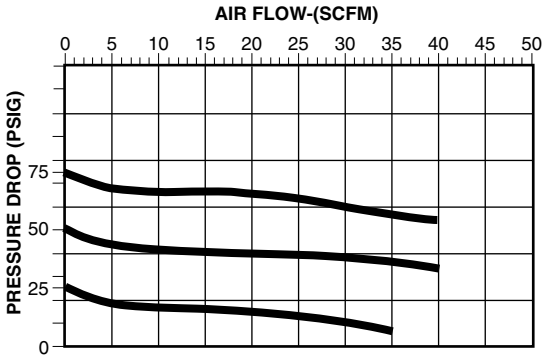

Lubricator

Proven fog-type design. Has anti-vibration, tamper-proof adjustment.

- Flow: 53.4 SCFM
- Port Size: .25" NPTF
- Temperature Range: 40°-180° F (4.4°-82.2°C)
- Pressure Range: 300 Psig Max. (20.4 Bars)
- Bowl Capacity: 1.5 oz. Std.
- Body: Zinc
- Bowl: Metal
- Weight. per Unit: .94 lbs.

Product No. 939201

NOTE — All flows taken at 100 Psig inlet pressure, and 5 Psig pressure drop.

Lubricator Drip Rate Setting

A. Determine the average internal air volume of the clutch or brake. See clutch and brake air volume/rate data pages 365 and 366.
Example: Nexen Brake Model T-1000 Average Volume = Vn + Vo/2 = 1.739 + 8.656/2 = 6.067 cubic inches.

B. Multiply the result in step A by the maximum cycle rate per minute.
Example: At 20 cycles per minute; Cubic Inches per Minute = 20 x 6.067 = 121.34

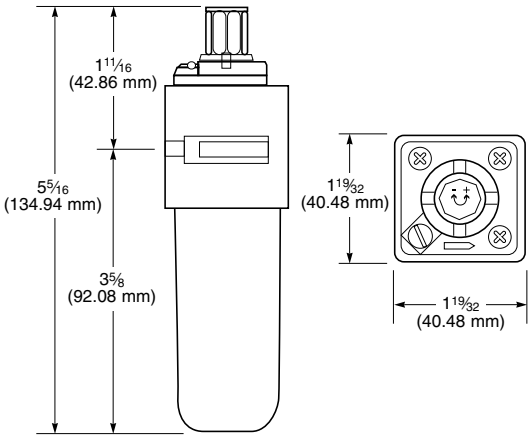

C. Determine the CF factor for the air pressure setting from the graph on page 366.
Example: The CF factor for 80 psi = 6.5

D. Multiply the result in Step B by the CF factor to determine the cubic inches of free air;
Example: 6.5 x 121.34 = 788.7 cubic inches per minute of free air.

E. Divide the result in step D by 1728 to convert to cubic feet per minute.
Example: 788.7/1728 = 788.7/1728 = .456 cubic feet per minute.

NOTE: Nexen recommends one drop of oil for every 20 cubic feet of air.

F. To determine the amount of time between drops, divide 20 by the flow rate.
Example: Divide 20 by the result of step E; 20/.456 = 44 minutes between drops of oil.

WARNING

The polycarbonate plastic material used to manufacture the sight dome may be attacked by certain chemicals. Do not use this lubricator on systems with air supplied by a compressor lubricated with synthetic oils or oils containing phosphate esters or chlorinated hydrocarbons. These oils can carry over into the air lines and chemically attack and possibly rupture the sight dome. Also, do not expose the sight dome to materials such as carbon tetrachloride, trichlorethylene, acetone, paint thinner, cleaning fluids, or other harmful materials, for they too will cause the plastic to craze and/or rupture. For use in environments where these, or any, chemicals may be present, consult the factory for approval.

3-Way Clutch or Brake Controls

.125" or .250" NPT, 3-Way Controls feature 6 watt coils. Available in three mounting configurations, normally open and normally closed. For explosion proof or encapsulated coils, consult factory. 0-150 psi operating range standard.

3-Way Controls, In-Line Mount

Valve	Operating Range (PSI)	Effective Orifice	Port Size①	Volts②	Power Consumption	Product Number
Normally Open	0 - 125	.0469	.125 NPT	120 AC	6 Watts	948801
Normally Open	0 - 125	.0469	.25 NPT	120 AC	6 Watts	949001
Normally Closed	0 - 150	.0469	.125 NPT	120 AC	6 Watts	948802
Normally Closed	0 - 150	.0469	.25 NPT	120 AC	6 Watts	949002

3-Way Controls, Air Inlet Mount

Valve	Operating Range (PSI)	Effective Orifice	Port Size①	Volts②	Power Consumption	Product Number
Normally Open	0 - 125	.0469	.125 NPT	120 AC	6 Watts	948803
Normally Open	0 - 125	.0469	.25 NPT	120 AC	6 Watts	949003
Normally Closed	0 - 150	.0469	.125 NPT	120 AC	6 Watts	948804
Normally Closed	0 - 150	.0469	.25 NPT	120 AC	6 Watts	949004

① Top port, .125 NPT, Normally Open; 10-32, Normally Closed. See air flow rate, page 366
② See page 154 for 24 VDC, 90 VDC and 240 VAC 3-way Controls

Optional Coils

Style of Coil	Product Number	Voltage	Power Consumption
Standard	1876	12 VDC	7 Watts
Standard	1877	24 VDC	7 Watts
Standard	1878	90 VDC	7 Watts
Standard	1879	120 VAC	6 Watts
Standard	1880	240 VAC	6 Watts
Standard	1881	480 VAC	6 Watts
Explosion Proof	1882	6 VDC	7 Watts
Explosion Proof	1883	12 VAC	7 Watts
Explosion Proof	1885	24 VDC	7 Watts
Explosion Proof	1887	240 VAC	6 Watts

NORMALLY OPEN (N.O.)

DE-ENERGIZED
Allows air supply to flow to a clutch or brake.

ENERGIZED
Blocks the air supply and allows the air in the clutch or brake to exhaust.

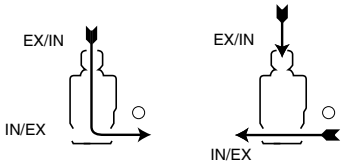

NORMALLY CLOSED (N.C.)

DE-ENERGIZED
Blocks the air supply to a clutch or brake.

ENERGIZED
Allows air supply to flow to a clutch or brake.

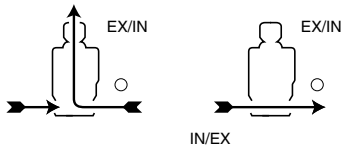

APPROXIMATE DIMENSIONS

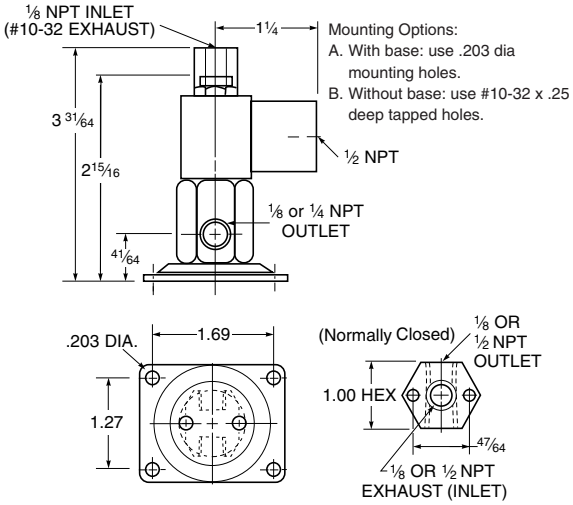

APPROXIMATE DIMENSIONS

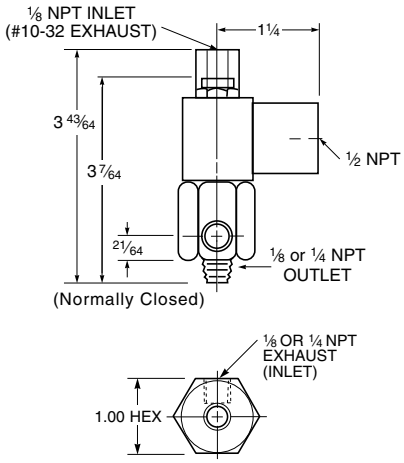

Clutch or Brake Control Panel

Compact Regulator, 3-way toggle switch and gauge fitted into attractive contoured case. Ideal for wall mounting. Simply connect inlet and outlet. Regulator hand wheel lock discourages unwanted adjustment.

- 5-125 psi range
- .09375" internal flow passages, Flow rate: 150 SCFM at 100 psi.
- 300 psi max. inlet pressure.
- 180° F max. operating temp.
- .125" NPT Air line connections

Product No. 854000

APPROXIMATE DIMENSIONS

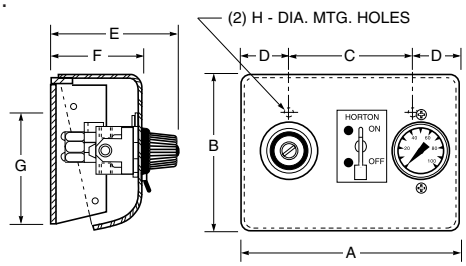

Control Panel

Dim	A	B	C	D	E	F	G	H
Inches	6.125	4.875	3.875	1.125	4.5	2.875	3.5	.25

Spool Controls - 4 and 5 Way Clutch-Brake Controls

A 4 way control directs a common air supply to the clutch or brake providing the same outlet pressure to each cylinder.

A 5 way control directs a separate pressure air supply to the clutch and brake providing different pressures to each cylinder. Each cylinder exhausts through the port marked "IN".

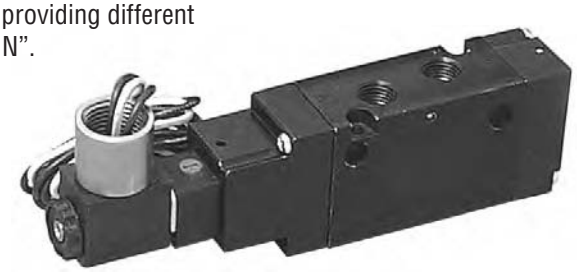

SPOOL CONTROLS

Single Solenoid Models

Style	Product Number	Operating Range(PSI)
4-Way, Internally Piloted	170012	20 - 150
4/5-Way, Externally piloted	170013	0 - 150

Product Number	Effective Orifice	Port Size	Voltage	Power Consumption
170012	.188 in	.25 NPT	120 AC	6.3 VA
170013	.188 in	.25 NPT	120 AC	6.3 VA

Single Solenoid Models are not suitable for non-lubricated air applications

Double Solenoid Models

Style	Product Number	Operating Range(PSI)
4-Way, Internally Piloted	170014	20 - 150
4/5-Way, Externally piloted	170017	0 - 150

Product Number	Effective Orifice	Port Size	Voltage	Power Consumption
170014	.188 in	.25 NPT	120 AC	6.3 VA
170017	.188 in	.25 NPT	120 AC	6.3 VA

Optional Coils

Style of Coil	Product Number	Voltage	Power Consumption
Standard	170020	12 VDC	4.6 Watts
Standard	170021	24 VDC	4.8 Watts
Standard	170023	120 VAC	6.3 VA
Standard	170024	240 VAC	6.4VA

C_V Flow: Up to 1.4

APPROXIMATE DIMENSIONS - SINGLE SOLENOID MODELS

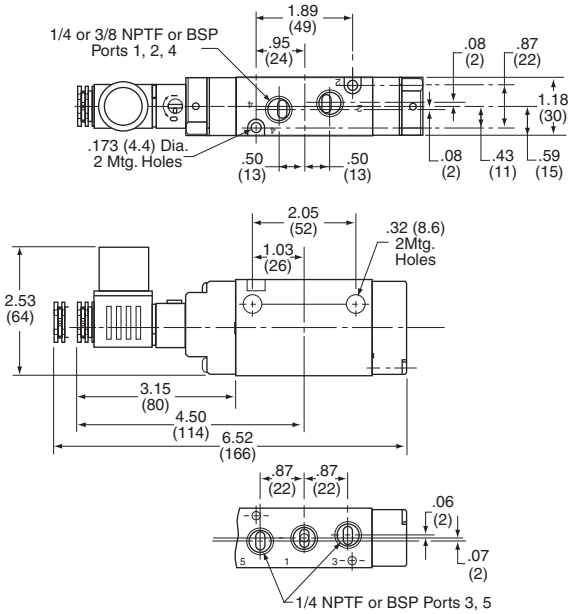

APPROXIMATE DIMENSIONS - DOUBLE SOLENOID MODELS

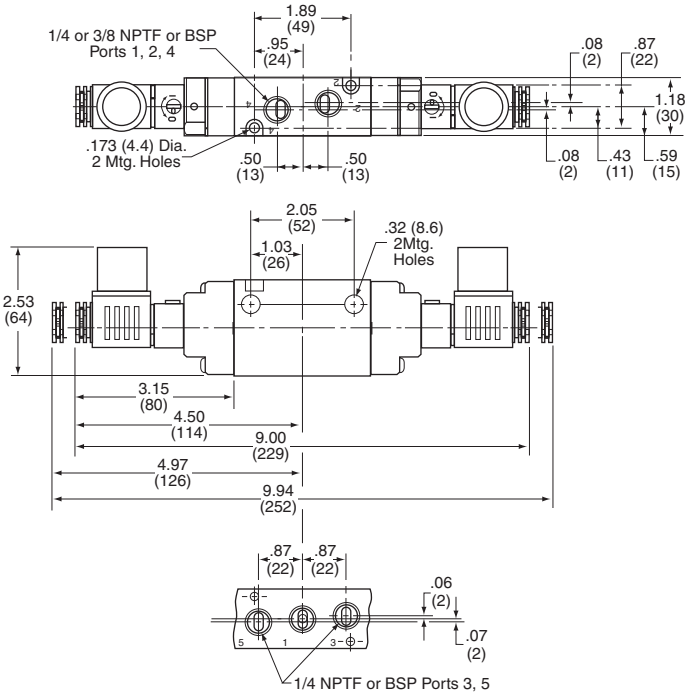

Adjustable Pressure Clutch or Brake Flow Control

A spring biased ball or optional poppet check provides full flow in one direction. A stainless steel, tapered needle provides a wide range of adjustment of flow in the controlled direction. A locknut prevents unwanted changes in adjustment.

This control allows higher air pressure for maximum torque capacity while achieving a "soft" start or stop through a gradual pressure build-up in the clutch or brake air chamber.

Controlled acceleration or deceleration ("soft" start or stop) can also be incorporated into a clutch/brake circuit similar to the 3 way circuit diagram shown on page 247, by adding a flow control, quick exhaust valve and accumulator between the control valve and the clutch/brake unit.

Pipe Size	C_V Maximum open Needle	C_V Flow Check	Product Number
.125 NPT	.20	.23	940412
.250 NPT	.43	.54	940425

SPECIFICATIONS

scfm = 22.67 (C_V)

Where: P1- P2 = Pressure Drop Across Flow Control
G = Specific Gravity of the Liquid at Flowing Temperature (G = 1 for air)

Operating Temperature Range = -40°F to +212°F

APPROXIMATE DIMENSIONS

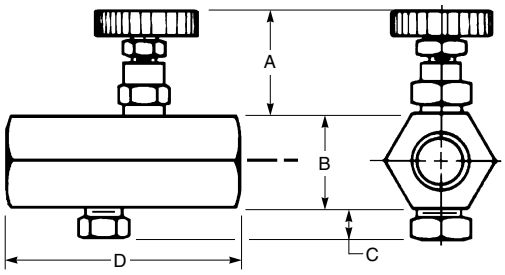

Flow Control

Pipe Size	Dim.	A OPEN	B HEX	C	D
.125 NPT	Inches	.875	.688	.203	1.75
.250 NPT	Inches	1	.875	.359	2.375

Restrictor-Fixed Pressure Clutch or Brake Flow Control

Fixed orifice restrictor slows down flow rate in one direction, yet allows free flow the other way. Used to retard clutch or brake engagement until another function is complete. Ideal when alternately pressurizing two systems with one control switch. Standard pipe threads allow in-line plumbing.

.125 NPT Product No. 932800
.250 NPT Product No. 933800

APPROXIMATE DIMENSIONS

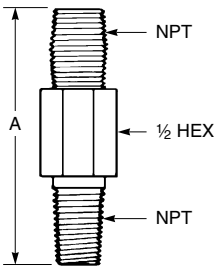

Restrictor

Dim	NPT	A	NPT	A
Inches	.125	1.75	.25	1.75

Exhaust Muffler

Mufflers truly silence noisy air exhaust. Extremely low air resistance in the unit means no interference with system operation difficulties due to back pressure.

.125 NPT Product No. 939300
.250 NPT Product No. 939400

APPROXIMATE DIMENSIONS

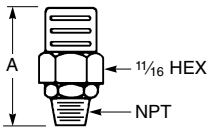

Exhaust Muffler

Dim	NPT	A	NPT	A
Inches	.125	1.438	.25	1.625

3-Way Manual Clutch or Brake Control

3-way manual control comes complete with escutcheon plate and mounting screws. Use to override automatic controls in emergencies or pilot a 4 or 5 way control. 3/32" internal orifice.

Product No. 944900

Flow rate: 15 SCFM at 100 psi.

3-WAY MANUAL CONTROL

Dim	A	B	C	D	E	F
Inches	2.438	2	1.5	1	1.031	.5

APPROXIMATE DIMENSIONS

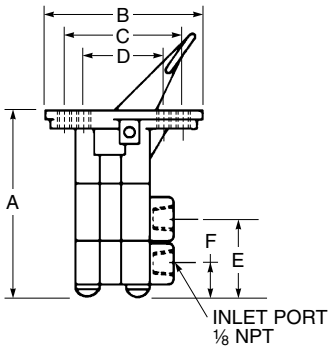

Clutch or Brake - Quick Exhaust/Shuttle Valve

Mounts directly to the clutch or brake air chamber inlet where air and airline impurities are exhausted directly to the atmosphere by a 3-5 psi drop in the supply pressure. Increases clutch and brake response times because air need not travel thru long lines back to the control. Can also eliminate overlap in clutch-brake combinations. Use also as a shuttle valve when alternating supplying cylinder with two pressures.

1/8 NPT Product No. 945100
1/4 NPT Product No. 945125

1/8 NPT

Dim	A	B	C	D	E
Inches	1.125	.563	.281	1.188	1.031

1/4 NPT

Dim	A	B	C	D	E
Inches	1.672	1.219	.547	1.359	1.094

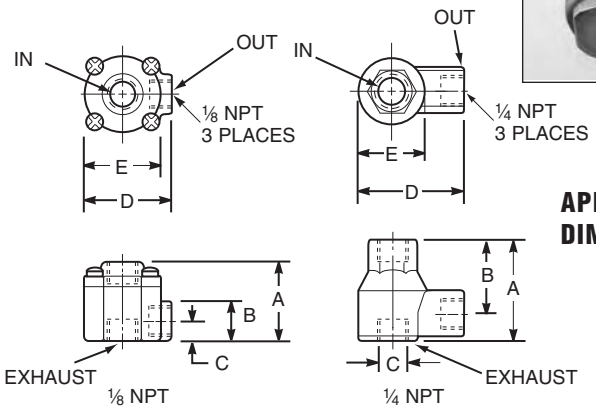

APPROXIMATE DIMENSIONS

Clutch/Brake Combination Overlap Eliminator

An Overlap Eliminator between a 4-way control and a clutch-brake system prevents a torque rise in either the clutch or brake until the alternate unit torque has dropped to an ineffective level.

Product No 944400

APPROXIMATE DIMENSIONS

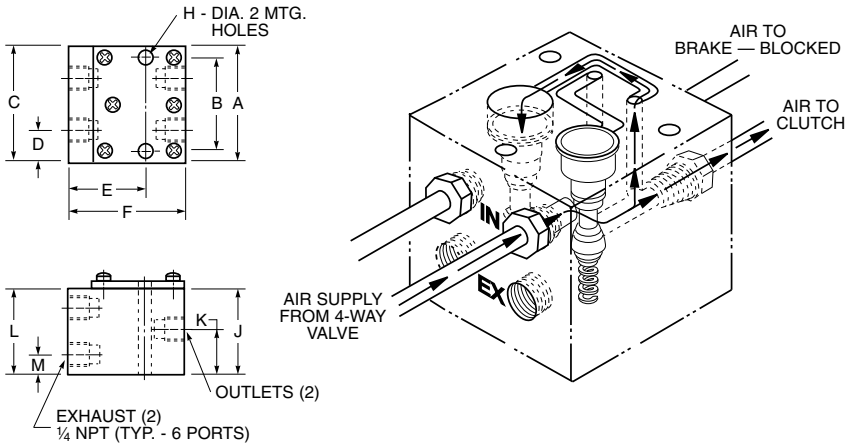

OVERLAP ELIMINATOR

Dim	A	B	C	D	E	F	G	H	J	K	L	M
Inches	2.5	2	1.813	.688	1.656	2.5	.25	.266	2.188	.969	1.406	.406

Typical Circuit Diagrams

MANUAL CONTROL PANEL

Product Number	Description
940021	Control Kit N.O.

This Kit Contains:
1 each, Filter (.250 NPT.)
1 each, Control Panel
1 each, Quick Exhaust Valve (.125 NPT.)
1 each, Muffler (.125 NPT.)
1 each, Adapter (.125 NPT. to .250 NPT.)

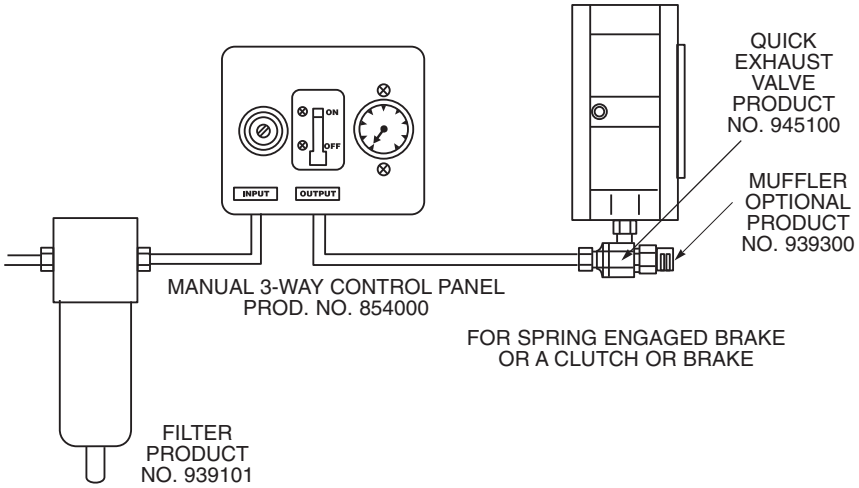

3-WAY CONTROL — N.O. — DISENGAGES CLUTCH OR BRAKE WHEN ACTUATOR SWITCH IS CLOSED

CONTROL KIT - SINGLE UNIT

Product Number	Description
940011	Control Kit N.O.

This Kit Contains:
1 each, 3-Way Valve (.25 NPT.), Inline Mount
1 each, Filter (.250 NPT.)
1 each, Regulator (.250 NPT.)
1 each, Lubricator (.250 NPT.)
1 each, Quick Exhaust Valve (.125 NPT.)
1 each, Muffler (.125 NPT.)
1 each, Adapter (.125 NPT. to .250 NPT.)

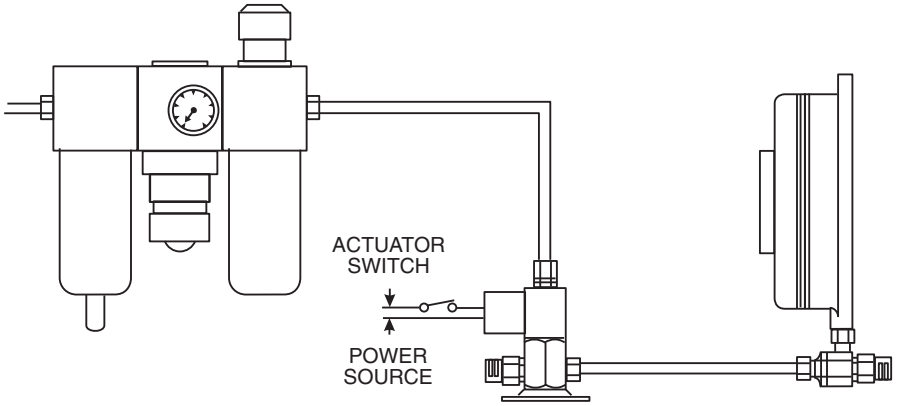

Typical Circuit Diagrams

4-WAY SINGLE SOLENOID SPOOL CONTROL — INTERNALLY PILOTED — N.C. FOR OPERATING CLUTCH AND BRAKE AT PRESSURES 20 TO 100 PSI

CONTROL KIT - 4-Way

Product Number	Description
940019	Control Kit, 4-Way

This Kit Contains:

1 each, Filter (.250 NPT.)
1 each, Regulator (.250 NPT.)
1 each, Lubricator (.250 NPT.)
1 each, 4-Way Valve, Single Solonoid
2 each, Quick Exhaust Valve (.125 NPT.)
2 each, Muffler (.125 NPT.)
2 each, Adapter (.125 NPT. to .250 NPT.)

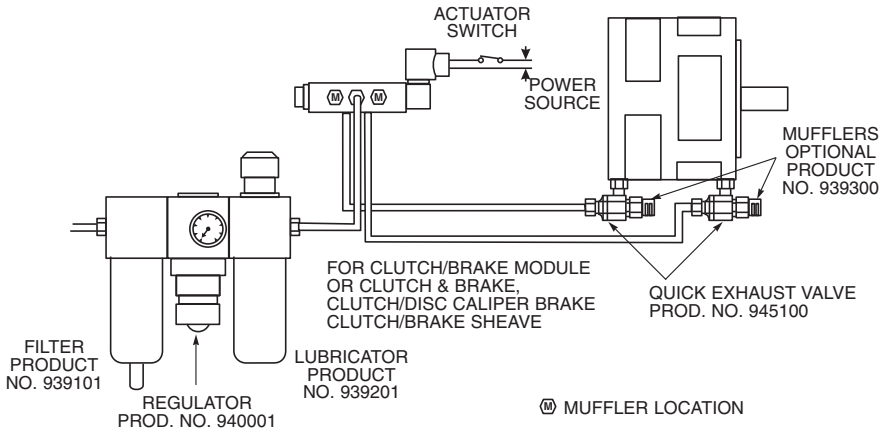

4-WAY SINGLE SOLENOID SPOOL CONTROL — EXTERNALLY PILOTED — N.C. FOR OPERATING CLUTCH AND BRAKE AT PRESSURES 20 TO 100 PSI

CONTROL KIT - 4 or 5-Way

Product Number	Description
940018	Control Kit, 4 or 5-Way

This Kit Contains:

1 each, Filter (.250 NPT.)
1 each, Regulator (.250 NPT.)
1 each, Lubricator (.250 NPT.)
1 each, 4 or 5-Way Valve, Single Solonoid
2 each, Quick Exhaust Valve (.125 NPT.)
2 each, Muffler (.125 NPT.)
2 each, Adapter (.125 NPT. to .250 NPT.)

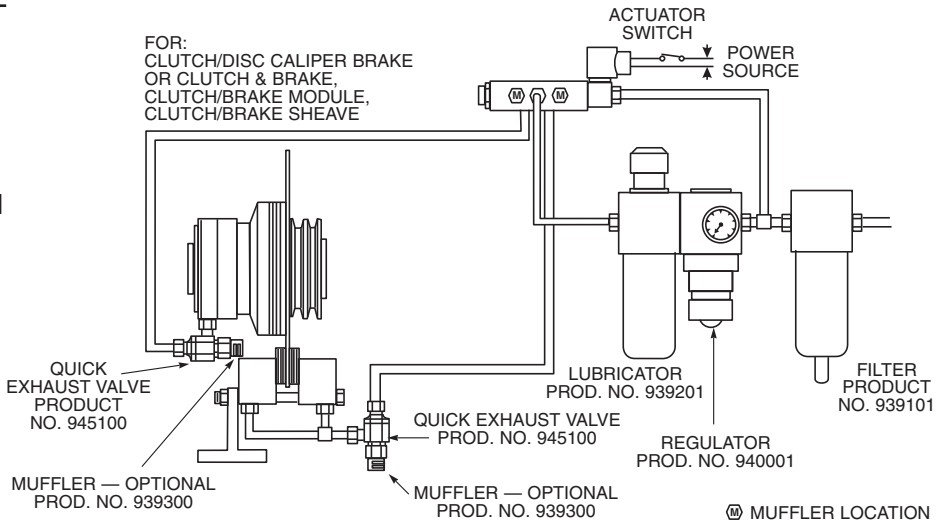

Typical Circuit Diagrams

3-WAY CONTROL — N.C. — ENGAGES CLUTCH OR BRAKE WHEN ACTUATOR SWITCH IS CLOSED

CONTROL KIT - SINGLE UNIT

Product Number	Description
940012	Control Kit N.C.

This Kit Contains:

1 each, 3-Way Valve (.250 NPT.), Inline Mount
1 each, Filter (.250 NPT.)
1 each, Regulator (.250 NPT.)
1 each, Lubricator (.250 NPT.)
1 each, Quick Exhaust Valve (.125 NPT.)
1 each, Muffler (.125 NPT.)
1 each, Adapter (.125 NPT. to .250 NPT.)

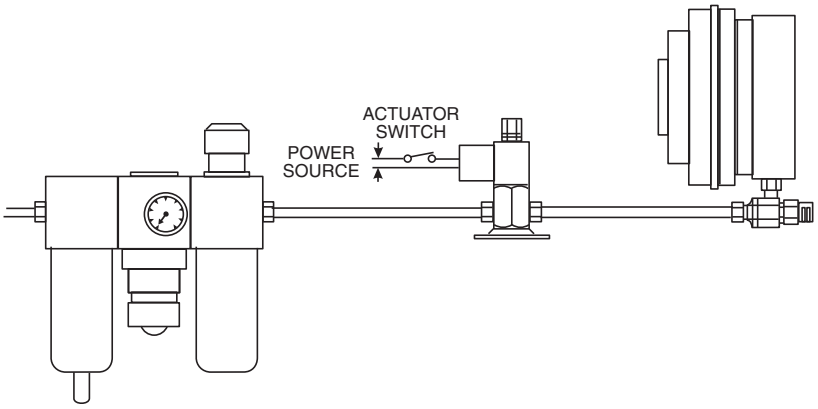

5-WAY DOUBLE SOLENOID SPOOL CONTROL — EXTERNALLY PILOTED FOR OPERATING CLUTCH AND BRAKE AT DIFFERENT AIR PRESSURES USING ONE CONTROL — FROM 20 TO 100 PSI

CONTROL KIT - TWO UNITS

For controlling air to two units or to a combination clutch/brake, select from the following:

Product Number	Description
940013	Control Kit. 4/5 Way (.125" NPT Quick Exhaust Valves & Mufflers)
940014	Control Kit. 4/5 Way (.25" NPT Quick Exhaust Valves & Mufflers)

These kits Contain:

1 each, Double Solenoid 4/5 Way Externally Piloted Spool Valve (.125 NPT.)
1 each, Filter (.250 NPT.)
2 each, Regulator (.250 NPT.)
2 each, Lubricator (.250 NPT.)
2 each, Quick Exhaust Valve (.125 or .250 NPT.)
2 each, Mufflers (.125 or .250 NPT.)

NOTE : Externally piloted, double solenoid spool valves can be connected for 4 or 5-Way operation.

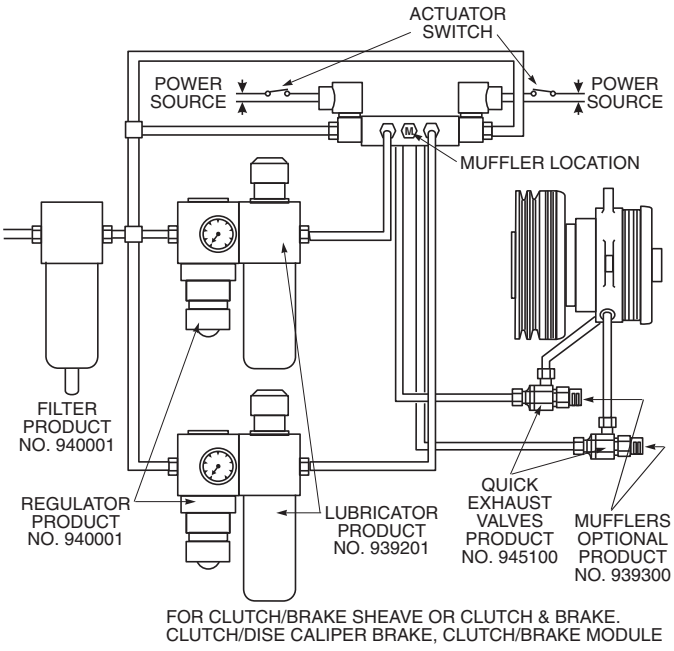

Typical Circuit Diagrams

4-WAY DOUBLE SOLENOID CONTROL — INTERNALLY PILOTED FOR CLUTCH AND BRAKE OPERATING ABOVE 30 CPM — FROM 20 TO 100 PSI

CONTROL KIT - 4-Way

Product Number	Description
940020	Control Kit, 4-Way

This Kit Contains:

1 each, Filter (.250 NPT.)
1 each, Regulator (.250 NPT.)
1 each, Lubricator (.250 NPT.)
1 each, 4-Way Valve, Double Solenoid
2 each, Quick Exhaust Valve (.125 NPT.)
2 each, Muffler (.125 NPT.)
2 each, Adapter (.125 NPT. to .250 NPT.)

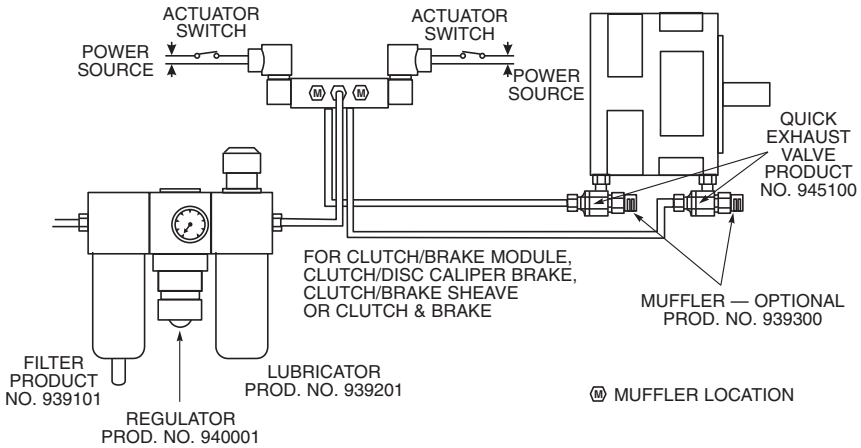

SOFT START OR STOP CIRCUIT

CONTROL KIT - 3-Way

Product Number	Description
940017	Control Kit, 3-Way

This Kit Contains:

1 each, 3-Way Valve, N.C.
1 each, Flow Control Valve
1 each, Quick Exhaust Valve (.125 NPT.)
1 each, Muffler (.125 NPT.)
2 each, Filter (.250 NPT.)
1 each, Regulator (.250 NPT.)
1 each, Lubricator (.250 NPT.)

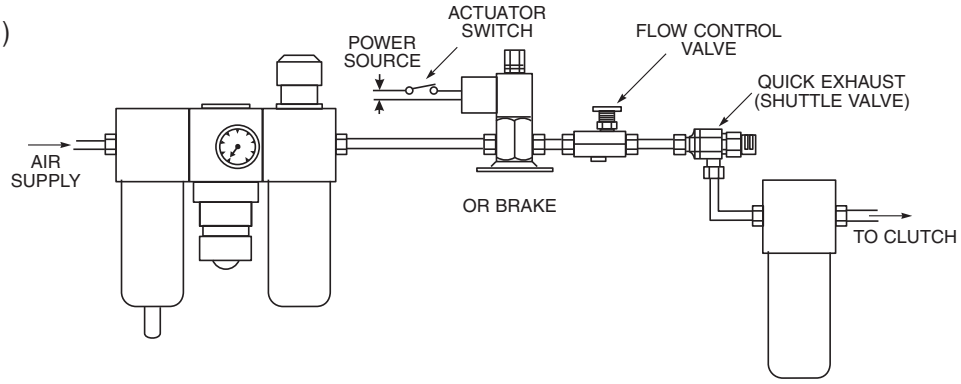

REPAIR KITS

Product Selection Chart

Product Groups	Repair Kits Open Design	Repair Kits Enlosed Design	Facing Kits	Bearing Kits	Seal Kits	Disc Packs
Friction Clutch Models BW, B-275, F-450, L-600, M-800, H-1000, XHW, FW, LW, MW, HW	Yes		Yes			
DPC Series Dual Plate Clutches & Brakes	Yes			Yes		
4H Series Multi-Disc Clutches	Yes					Yes
5H Series Tooth Clutches	Yes	Yes				
DFC & QFE Series High Capacity Clutches	Yes		Yes			
TL Series Torque Limiters	Yes	Yes				
Friction Brake Models S-450, S-600, S-800, S-1000, T-450, T-600, T-800, T-1000	Yes		Yes			
Caliper Brakes Models DB, BC, BD, SPC	Yes		Yes			
Drum Brakes			Yes			
Spring Engaged Brake Models TSE, SE, MB, SSE	Yes		Yes			
DFB & QFB Series High Capcity Brakes			Yes		Yes	
Modular NEMA "C" Flange Clutch-Brake Models MBU, MOU, MDU, MIU	Yes		Yes			
Clutch-Brake Modular Units MBU, MDU, MIU, MOU	Yes		Yes			
Clutch-Brake Models FWCB, LWCB, MWCB, HWCB	Yes					
Clutch-Brake Flange Mounted Models FMC, FMCB, FMCBE, FMCBS	Yes	Yes	Yes			

In accordance with Nexen's established policy of constant product improvement, the specifications contained in this document are subject to change without notice. Technical data listed in this document are based on the latest information available at the time of printing and are also subject to change without notice. For current information, please consult:
www.nexengroup.com

REPAIR KITS

This Section Contains: . . . . .Page

REPAIR KITS

Selection Chart 352

Models BW, B-275, F-450, L-600, M-800, H-1000, XHW, FW, LW, MW, & HW 354

DPC Series Dual Plate Clutches & Brakes 354

4H Series Multi-Disc Clutches 354

5H Series Tooth Clutches 355

DFE, QFE, & DFC High Capacity Clutches 355

TL Series Torque Limiters 355

Single-Flex Couplings 355

Double-Flex Couplings 355

Friction Brake S-450, S-600, S-800, S-1000, S-1200, S1400, T-450, T-600, T-800, T-1000 356

Caliper Brake Models DB, BC, BD, SPC 356

Facing Kits for Drum Brakes 356

Spring Engaged Brakes TSE, SE, MB, SSE, FMBES 357

DFB & QFB Series High Capacity Brakes 357

Tension Control Brakes STB-600, STB-940, BTBA-10, BTBA-12 . .357

Modular NEMA "C" Flange Clutch Brake Models MBU, MOU, MDU, MIU 358

Thru-Shaft Clutch-Brakes 358

Clutch-Brake Models FMCBE, FMCBES, FMCB, FMCE 358

Conveyor Clutch Brake LSCB 358

REPAIR KITS & FACING KITS FOR FRICTION CLUTCHES

REPAIR KITS & BEARING KITS FOR DPC SERIES DUAL PLATE CLUTCHES & BRAKES

REPAIR KITS FOR 5H SERIES TOOTH CLUTCHES

REPAIR KITS & DISC PACKS FOR 4H SERIES MULTI-DISC CLUTCHES

REPAIR KITS & FACING KITS FOR DFE & QFE SERIES HIGH CAPACITY CLUTCHES

REPAIR KITS FOR TL SERIES TORQUE LIMITERS

Repair Kits & Facing Kits For Friction Clutch Models BW, B-275, F-450, L-600, M-800, H-1000, XHW, FW, LW, MW, HW

Repair Kits contain: Bearings, O-Rings and Return Springs.
Order Pilot or Sheave Bearings separately.
Kits for BW. FW, LW, MW, HW & XHW also contain Standard Facings.
Facing Kits contain: Facings and Screws.

Standard Models	Repair Kit Product Number	Standard Facing PN	Loco Facing PN	Ultra Loco Facing PN	Hico Facing PN	Thrust Bearing Grease (6) 14.5 oz tubes PN
B-275	802874[1]	802876	---	---	---	
F-450 Models	802880	846971	846972	846975	846974	---
L-600 Models	805280	847071	847072	847076	847074	---
M-800 Models	807680	847171	847172	---	847174	---
H-1000 Models	810080	847271	847272	847273	847274	---
XHW Models	848200	848271	848272	---	---	---
BW	846800[2]	846871	---	846872	---	853900
FW Models	846900	846971	846972	---	846974	853900
LW Models	847000	847071	847072	---	847074	853900
MW Models	847100	847171	847172	---	847174	853900
HW Models	847200	847271	847272	847273	847274	853900

[1] Repair Kit with Ultra LoCo Facing: 802875 [2] Repair Kit with Ultra LoCo Facing: 846804

Metric Models	Repair Kit Product Number	Standard Facing PN	Loco Facing PN	Ultra Loco Facing PN	Hico Facing PN
B-275 Model	802874	846871	---	---	---
F-450 Model	802880	950070	950071	950074	950072
L-600 Model	805280	950170	950171	950173	950172
M-800 Model	807680	950270	950271	---	950272
H-1000 Model	810080	950370	950371	950373	950372

Facing Kits For STC-600 & STC-940 Tension Control Clutches

Facing Kits contain: Facings and Screws.

Model	Facing Kit Product Number
STC 600 Kits	
Standard Facings	927202
Loco Facings	927248
Repair Kit with Standard Facings	927201
Repair Kit with Loco Facings	927247
STC 940 Kits	
Standard Facings	927213
Loco Facings	927254
Repair Kit with Standard Facings	927212
Repair Kit with Loco Facings	927253

Repair Kits & Bearing Kits For DPC Series Dual Plate Clutches & Brakes

Repair Kits contain: O-Rings, Facings, Screws and Retaining Rings
Bearing Kits contain: Bearings and Retaining Rings

Models	Repair Kit Product Number	Bearing Kit Product Number
DPC-9T / DPB-9T	960800	960900
DPC-11T / DPB-11T	961800	961900
DPC-13T / DPB-13T	962800	962900
DPC-15T / DPB-15T	963800	963900

Repair Kits & Disc Packs For Multi-Disc Clutches

Repair Kits contain: Outer Plates, Inner Plates, Waved Springs, Bearings and O-Rings
Disc Packs contain: Outer Plates, Inner Plates and Waved Springs

Models	Repair Kit Product Number	Disc Pack Product Number
4H30P	919000	921100
4H35P	919100	921200
4H40P	919200	921300
4H45P	919300	921400
4H50P	919400	921500
4H60P	919500	921600
4H70P	919600	921700

Models	Repair Kit Product Number	Disc Pack Product Number
LSCC-32	923559	923560
LSCC-44	923551	923552
LSCC-54	923577	923578

Repair Kits For 5H Series Tooth Clutches

Open Design Repair Kits contain: Bearings, O-Rings and Springs
Enclosed Design Repair Kits contain: Bearings, O-Rings, Springs and Back-up Rings
Metric Models use same Repair Kits.

Open Design Flange Mount Models	Repair Kit Product Number
5H30	916200
5H35	916300
5H40	916400
5H45	916500
5H50	916600
5H60	916700
5H70	916800

Open Design Single Position Pilot Mount Models	Repair Kit Product Number
5H30P-SP	913300
5H35P-SP	913400
5H40P-SP	913500
5H45P-SP	913600
5H50P-SP	913700
5H60P-SP	913800
5H70P-SP	914000
5H80P-SP	913900

Open Design Pilot Mount Models	Repair Kit Product Number
5H20P	911309
5H30P	916900
5H35P	917000
5H40P	917100
5H45P	917200
5H50P	917300
5H60P	917400
5H70P	917500
5H80P	916100
5H100P	916710

Enclosed Design Single Position Pilot Mount Models	Repair Kit Product Number
5H30PSP-E	913009
5H35PSP-E	913019
5H40PSP-E	913029
5H45PSP-E	913039
5H50PSP-E	913049
5H60PSP-E	913059

Enclosed Design Pilot Mount Models	Repair Kit Product Number
5H30P-E	913008
5H35P-E	913018
5H40P-E	913028
5H45P-E	913038
5H50P-E	913048
5H60P-E	913058

Repair Kits & Facing Kits For DFE, QFE & DFC Series High Capacity Clutches

Repair Kits contain: O-Rings, O-Ring Lubricant and Return Springs
Facing Kits contain: Facings and Screws

Model	Repair Kit Product Number	Standard Facing Kit Product Number	HICO Facing Kit Product Number
DFE-1150	964016	964028	964029
DFE-1650	964019	964031	964032
DFE-2200	964022	964034	964035
DFE-2500	964025	964037	964038
QFE-1150	964088	964028	964029
QFE-1650	964091	964031	964032
QFE-2200	964094	964034	964035
QFE-2500	964097	964037	964038

Model	Repair Kit Product Number	Standard Facing Kit Product Number
DFC-1650	964161	964163
DFC-2200	964162	964154

Repair Kits For Single-flex couplings

Repair Kits contain: Disc-Pack, Cap Screw and Hex Nuts

Models	Repair Kit Product Number
4/5H30/TL20	909982
4/5H35/TL30	910082
4/5H40	910182
4/5H45/TL40	910282
4/5H50/TL50	910382
4/5H60/TL60	910482
4/5H70/TL70	910582
5H80/TL80	911782

Repair Kits For TL Series Torque Limiters

Repair Kits contain: Bearings, O-Rings, Springs and Back-up Rings
Metric Models use same Repair Kits

Set Screw Mount Models	Repair Kit Product Number
TL-10A	801808
TL-15A	801808
TL-20A	801508
TL-20A-E	802908
TL-20A-E/2	802908
TL-30A	801518
TL-30A-E	802918
TL-30A-E/2	802918
TL-40A	801528
TL-40A-E	802928
TL-40A-E/2	802928
TL-50A	801538
TL-50A-E	802938
TL-50A-E/2	802938

Set Screw Mount Models	Repair Kit Product Number
TL-60A	801548
TL-60A-E	802948
TL-60A-E/2	802948
TL-70A	801558
TL-70A/2	801558
TL-80A	801568
TL-80A/2	801568

Set Collar Mount Models	Repair Kit Product Number
TL-20-AC	801508
TL-20-AC/2	801508
TL-30-AC	801518
TL-30-AC/2	801518
TL-40-AC	801528
TL-40-AC/2	801528
TL-50-AC	801538
TL-50-AC/2	801538
TL-60-AC	801548
TL-60-AC/2	801548
TL-70-AC	801558
TL-70-AC/2	801558
TL-80-AC	801568
TL-80-AC/2	801568

Repair Kits For Double-flex couplings

Repair Kits contain: Disc-Pack, Cap Screw and Hex Nuts

Models	Repair Kit Product Number
4/5H30/TL20	909983
4/5H35/TL30	910083
4/5H40	910183
4/5H45/TL40	910283
4/5H50/TL50	910383
4/5H60/TL60	910483
4/5H70/TL70	910583
5H80/TL80	911783

REPAIR KITS & FACING KITS FOR FRICTION BRAKES

REPAIR KITS & FACING KITS FOR SPRING ENGAGED BRAKES

REPAIR KITS & FACING KITS FOR CALIPER BRAKES

REPAIR KITS & FACING KITS FOR DRUM BRAKES

SEAL KITS & FACING KITS FOR DFB & QFB SERIES HIGH CAPACITY BRAKES

Repair Kits & Facing Kits For Friction Brake Models S-450, S-600, S-800, S-1000, S-1200, S-1400, T-450, T-600, T-800, T-1000

Repair Kits contain: Bearings, O-Rings and Return Springs.
Facing Kits contain: Facings and Screws.

Standard Models	Repair Kit Product Number	Standard Facing Kit Product Number	Loco Facing Kit Product Number	Ultra Loco Facing Kit Product Number	Hico Facing Kit Product Number
BWB	846800	846871	----	846872	----
S-450 Models	818910	818971	818972	818978	818974
S-600 Models	820510	820571	820572	820579	820574
S-800 Models	827410	827471	827472	827478	827474
S-1000 Models	827510	827571	827572	827578	827574
S-1200 Models	822512	822511	822528	----	822711
S-1400 Models	822522	822521	822529	----	822722
T-450 Models	818910	818971	818972	818978	818974
T-600 Models	820510	820571	820572	820579	820574
T-800 Models	827410	827471	827472	827478	827474
T-1000 Models	827510	827571	827572	827578	827574
T-1200 Models	822512	822511	822528	----	822711
T-1400 Models	822522	822521	822529	----	822722

Metric Models	Repair Kit Product Number	Standard Facing Kit Product Number	Loco Facing Kit Product Number	Ultra Loco Facing Kit Product Number	Hico Facing Kit Product Number
S-450 Models	818910	818975	818976	818979	818977
S-600 Models	820510	820575	820576	820580	820577
S-800 Models	827410	827475	827476	827478	827477
S-1000 Models	827510	827575	827576	827579	827577

Repair Kits & Facing Kits For Caliper Brake Models DB, BC, BD, SPC

Repair Kits contain: Sleeve Bearings, Return Springs, Seals, Facings and Screws
Facing Kits contain: Facings and Screws.

Standard Models	Repair Kit Product Number	Standard Facing Kit Product Number	Loco Facing Kit Product Number	Hico Facing Kit Product Number	Ultra-LOCO Facing Kit Product Number
DB	---	835600	835601	835602	835693
BC288A	835272	---	---	835271 (2 required)	
BC425A	835274	---	---	835271 (3 required)	
BC288S	835273	---	---	835271 (2 required)	
BC425S	835275	---	---	835271 (3 required)	
BD	933900	934000	934001	---	
SPC-8A	837472	837471	837473	---	
SPC-12A	837472	837471	837473	---	
SPC-20A	837472	837471	837473	---	
SPC-8S	837472	837471	837473	---	
SPC-12S	837472	837471	837473	---	
SPC-20S	837472	837471	837473	---	

Facing Kits For Drum Brakes

Facing Kits contain: Facings and Screws. 845175 includes upper sliding shoes w/bonded facing

Standard Models	Standard Facing Kit Product Number	Loco Facing Kit Product Number
J Standard	845175	---
K Standard	845171	845172
8K Standard	845271	845272
12K Standard	845571	845572

Standard Models	Standard Facing Kit Product Number	Loco Facing Kit Product Number
4K Hinge Top	845171	845172
8K Hinge Top	845271	845272
12K Hinge Top	845571	845572

Repair Kits & Facing Kits For Spring Engaged Brake Models TSE, SE, MB, SSE, FMBES

Spring Engaged Tapered Bore Brakes

Basic Repair Kits contain: Bearings, Shoulder Screws & O-Rings.
Facing Kits contain: Facings and Screws.

Repair and Facing Kits contain all of the above items.

Standard Models	Basic Repair Kit Product Number	Hico Facing Kit Product Number	Repair and Facing Kit Product Number
TSE-450 Models	818870	818974	818700
TSE-600 Models	820370	820574	820200
TSE-800 Models	822470	827474	827610
TSE-1000 Models	822570①	827574	827700
TSE-1200 Models	–	822711	822712
TSE-1400 Models	–	822722	822712

① Order Repair Kit 822571 for TSE-1000 with Serial No.higher than 1273138

Spring Engaged Brakes

Repair Kits contain: Bearings, O-Rings, Standard Facings and Return Spring
Facing Kits contain: Facings and Screws.

Standard Models	Repair Kit Product Number	Standard Facing Kit Product Number
SE-100	808400	808471
SE-200	808500	808471
SE-500	812700	812771
SE-1000	812800	812771

Spring Set Brakes

Repair Kits contain: Sleeve Bearing , O-Rings, Facings and Screws

Standard Models	Repair Kit Product Number
MB450S	801350
MB600S	801351
MB800S	801352

Spring Engaged Straight Bore Brakes

Basic Repair Kits contain: Bearings, O-Rings, Shoulder Screws.
Facing Kits contain: Facings and Screws.

Repair and Facing Kits contain all of the above items.

Standard Models	Basic Repair Kit Product Number	Hico Facing Kit Product Number	Repair and Facing Kit Product Number
SSE-450 Models	818870	818974	818700
SSE-600 Models	820370	820574	820200
SSE-800 Models	822470	827474	827610
SSE-1000 Models	822570①	827574	827700

① Order Repair Kit 822571 for SSE-1000 with Serial No.higher than 1273138

FMBES C-Faced Motor Brake

Repair Kits contain: Friction Facing, Ball Bearings, Facing Screws and O-Rings
Facing Kits contain: Facings and Screws

Standard Models	Repair Kit Product Number	Facing Kit Product Number
FMBES-625	827301	827302
FMBES-875	827301	827302
FMBES-1125	827303	827304
FMBES-1375	827303	827304

Seal Kits & Facing Kits For DFB & QFB Series High Capcity Brakes

Seal Kits contain: O-Rings and O-Ring Lubricant
Facing Kits contain: Facings and Screws

Standard Models	Seal Kit Product Number	Standard Facing Kit Product Number	Hico Facing Kit Product Number
DFB-1150	964017	964028	964029
DFB-1650	964020	964031	964032
DFB-2200	964023	964034	964035
DFB-2500	964026	964037	964038
QFB-1150	964017	964028	964029
QFB-1650	964020	964031	964032
QFB-2200	964023	964034	964035
QFB-2500	964026	964037	964038

Repair Kits & Facing Kits For STB-600, STB-940, BTBA-10 & BTBA-12 Tension Control Brakes

Facing Kits contain: Facings and Screws

Standard Models	Standard Facing Kit Product Number	LOCO Facing Kit Product Number	Low Dust Facing Kit Product Number	Repair Kit With Standard Facings Product Number	Repair Kit With LOCO Facings Product Number
STB-600	927205	927250	–	927240	927249
STB-940	927209	927252	–	927208	927252
BTBA-10	927434	927435	927521	–	–
BTBA-12	927539	927540	927522	–	–

Repair Kits & Facing Kits For Modular Nema "C" Flange Clutch-Brake Models MBU, MOU, MDU, MIU

Brake Modules

Repair Kits contain: Bearings, O-Rings, Return Springs, Facings and Screws
Facing Kits contain: Facings and Screws

Standard Models	Repair Kit Product Number	Standard Facing Kit Product Number	Loco ① Facing Kit Product Number
MBU-625	930200	930276	930272
MBU-875	930200	930276	930272
MBU-1125	937300	930277	847072
MBU-1375	937600	930278	847172

Output Modules

Repair Kits contain: Bearings, Facings and Screws
Facing Kits contain: Facings and Screws

Standard Models	Repair Kit Product Number	Standard Facing Kit Product Number	Loco Facing Kit Product Number
MOU-625	930300	930276	930272
MOU-875	930300	930276	930272
MOU-1125	937400	930277	847072
MOU-1375	937700	930278	847172

Drive Modules

Repair Kits contain: Bearings, O-Rings, and Return Springs

Standard Models	Repair Kit Product Number
MDU-625	930100
MDU-875	930100
MDU-1125	937200
MDU-1375	937500

Input Modules

Repair Kits contain: Bearings

Standard Models	Repair Kit Product Number
MIU-625	930000
MIU-875	930000
MIU-1125	937100
MIU-1375	937100

Repair Kits For Thru-Shaft Clutch-Brakes

Clutch Brake–Sheaves

Repair Kits contain: Bearings, O-Rings, Return Springs, Facings and Screws

Standard Models	Repair Kit Product Number
BWCB	826070
BCB-27S	826080
FCB-450	827151
FWCB	847800
HWCB	848100

Standard Models	Repair Kit Product Number
LCB-600	828951
LWCB	847900
MCB-800	830851
MWCB	848000

Repair Kits & Facing Kits For Clutch-Brake Models FMCBE, FMCBES, FMCB, FMCE

FMCBE, Air Engaged

Repair Kits contain: Bearings and O-Rings
Facing Kits contain: Facings and Screws

Standard Models	Repair Kit Product Number	Standard ① Facing Kit Product Number
FMCBE-500	801362	--
FMCBE-625	801447	801448
FMCBE-875	801428	801430
FMCBE-1125	801604	801605
FMCBE-1375	801651	801647

FMCBE, Air Engaged (Metric)

Repair Kits contain: Bearings and O-Rings
Facing Kits contain: Facings and Screws

Standard Models	Repair Kit Product Number	Standard① Facing Kit Product Number
FMCBE-70-14	801362	--
FMCBE-110-14	801436	801448
FMCBE-130-19	801428	801430
FMCBE-130-24	801428	801430
FMCBE-7-28	801637	801605
FMCBE-7-38	801638	801645
FMCBE-8-38	801639	801647
FMCBE-8-42	801640	801649

FMCB, Air Engaged

Repair Kits contain: Bearings and O-Rings
Facing Kits contain: Facings and Screws

Standard Models	Repair Kit Product Number	Clutch Facing Kit Product Number	Brake Facing Kit Product Number
FMCB-130-19	801428	801477	801430
FMCB-130-24	801428	801477	801430
FMCB-7-28	801637	801644	801605
FMCB-7-38	801638	801646	801645
FMCB-8-38	801639	801648	801647
FMCB-8-42	801640	801650	801649
FMCB-1625	801742	801650	801649

LSCB-HT

Repair Kits contain: Bearings, springs, Friction Disk Pack and O-Rings
Facing Kits contain: Thrust Bearing, springs, Friction Disk Pack

Standard Models	Repair Kit Product Number	Facing Kit Product Number
LSCB-32	923521	923522
LSCB-44	923574	923572
LSCB-54	923592	923593

FMCBES, Spring Engaged

Repair Kits contain: Bearings and O-Rings
Facing Kits contain: Facings and Screws

Standard Models	Repair Kit Product Number	Standard① Facing Kit Product Number
FMCBES-625	801652	801399
FMCBES-875	801652	801399
FMCBES-1125	801653	801605
FMCBES-1375	801654	801647

FMCBES, Spring Engaged (Metric)

Repair Kits contain: Bearings and O-Rings
Facing Kits contain: Facings and Screws

Standard Models	Repair Kit Product Number	Standard① Facing Kit Product Number
FMCBES-110-14	801401	801448
FMCBES-130-19	801402	801430
FMCBES-130-24	801402	801430
FMCBES-7-28	801662	801605
FMCBES-7-38	801661	801645
FMCBES-8-38	801664	801647
FMCBES-8-42	801405	801649

① Two Facng Kits are required for each Clutch-Brake

FMCE, Clutches

Repair Kits contain: Bearings and O-Rings
Facing Kits contain: Facings and Screws

Standard Models	Repair Kit Product Number	Standard Facing Kit Product Number
FMCE-625	801487	801448
FMCE-875	801474	801477
FMCE-1125	918378	801605
FMCE-1375	918379	801647

FMCE/OPS

Repair Kits contain: Bearings and O-Rings
Facing Kits contain: Facings and Screws

Standard Models	Repair Kit Product Number	Standard Facing Kit Product Number
FMCE-625/OPS	801692	801448
FMCE-875/OPS	801693	801477
FMCE-1125/OPS	801694	801605
FMCE-1375/OPS	801695	801647

In accordance with Nexen's established policy of constant product improvement, the specifications contained in this document are subject to change without notice. Technical data listed in this document are based on the latest information available at the time of printing and are also subject to change without notice. For current information, please consult:
www.nexengroup.com

ENGINEERING DATA

This Section Contains: . . . . .Page

APPLICATION ENGINEERING DATA

Clutch & Brake Section 360
Clutch & Brake Service Factor 360
Inertia Values of Various Components . . .361-362
Inertia (WK2) & Torque 363
Thermal Characteristics 364
Heat Sink Capacities 364
Thermal Horsepower Vs. RPM 364
Response Time Data 365
Torque Rise & Decay Response 365
3 & 4-Way Valve Response Times 365
3 & 4-Way Correction Factor Graph 365
Clutch & Brake Air Volume/RateData 367-368
LOCO & HICO Friction Facings 368
Free Air Volume Consumption 368
Air Flow Rate in CFM at 70°F 368
New Unit Torque 368
Misalignment Tables 369
Standard Key Sizes 369
Peak Input Rate 370
Sprocket Tables 371

Clutch and Brake Selection

Clutch and brake selection is rather simple when the functions of the machine are clearly defined. Make sure that the location, shaft size, heat dissipation capacity and speed specifications are compatible with the clutch or brake selected. Match the machine requirements to a clutch or brake that is large enough to handle the load.

First, classify the application.

Occasional start or stop:
Applications where a clutch disconnects the prime mover (usually an electric motor) from the machine at cycle rates of less than four or five times a minute..

Torque and transmitted horsepower are important considerations of applications of this type.

Cyclic start and stop:
Applications where the clutch or brake cycles more than five per minute, fall into this classification. Inertia, torque, energy per cycle, heat sink capacity and response time all may require evaluation.

High inertia start or stop:
Applications of this type are identified by a requirement to start or stop heavy rotating rolls or flywheels in a specific length of time. Start or stop periods of more than 1.0 second are typical of this application type. Thermal characteristics and torque are very important considerations when high inertia loads are present.

Continuous slip or constant tensioning:
Applications of this type appear frequently in the paper or textile industries where material is pulled from a roll. A clutch or brake is connected to the shaft supporting the rolls to provided tension in the material. Heat dissipation is the primary concern for the clutch or brake.

Many clutch and brake selections are successfully made on the basis of transmitted horsepower and speed only.

For these applications it is a simple matter of solving the basic torque formulas and selecting a unit from the torque vs. air pressure graphs in the Air Champ catalog or various other product brochures.

Nexen also provides selection charts that suggest specific models at various transmitted horsepower and speeds. These charts include an appropriate service factor for the selected model.

Motor frame charts showing models which fit the motor shaft and/or NEMA "C" flanges are provided for some models. A general rule-of-thumb for motor mounted applications is: if the unit fits the motor, it will do the job. Nexen units have adequate torque to handle what the motors deliver.

Applications where the clutch or brake do not fit the motor require an evaluation of inertia, torque and thermal characteristics. Thermal characteristics are very important for high inertia or high cyclic applications. Do not select a unit from the catalog selection charts if high inertia loads are present.

Location is one of the most important things to consider when making a clutch or brake selection. Since torque (in. lbs) equals $\frac{63000 \times HP}{RPM}$, the clutch or brake should be located on the highest speed shaft in the drive train. An ideal location is directly on the motor shaft. Mounting is easier and more convenient. Lower torque requirements mean smaller diameter units, which result in **considerable** cost savings.

Because "Air Champ" Clutches and Brakes are rugged and designed with high thermal horsepower ratings, we can use the following rule-of-thumb for selecting the proper size unit for your application:

Ninety percent of the time you can make your clutch/brake selection based on the torque requirement alone. It's that simple. Sure it's important to use a service factor, but for the most part the torque requirement is your prime consideration when choosing which size clutch to use.

For severe applications with high inertia loads and high cycle rates, you also need to consider the thermal horsepower requirement.

Clutch & Brake Service Factor

A service factor of 1.2 to 2 should always be used when operating at any air pressure. The service factor is dependent on the severity of the application. It is not recommended that a clutch or brake be used in an application at its maximum designed torque.

Inertia Values of Various Components

All values unless specified are in Lb In^2. To convert to Lb Ft^2 use the following formula: $\frac{\text{LB IN}^2}{144} = \text{LB FT}^2$

Friction Clutches

MODEL	COMPONENTS	ROTATES WITH SHAFT	ROTATES WITH DRIVE
M, Micro	Housing, Facing, Bearing	----	0.050
	Friction Disc, Hub	0.193	----
BW, Bantam Weight	Pilot Mount w/Bearing	----	0.854
	2.750 Sheave w/Bearing	----	0.854
	Friction Disc, Hub	0.979	----
F-450 / FW	Pilot Mount w/Bearing & Lining	----	4.700
	3.350 Sheave w/Bearing & Lining	----	5.404
	Friction Disc, Hub	4.787	----
L-600 / LW	Pilot Mount w/Bearing & Lining	----	27.470
	4.500 Sheave w/Bearing & Lining	----	27.830
	5.300 Sheave w/Bearing & Lining	----	36.740
	Friction Disc, Hub	16.126	----
M-800 / MW	Pilot Mount w/Bearing & Lining	----	127.300
	5.300 Sheave w/Bearing & Lining	----	127.830
	Friction Disc, Hub	63.273	----
H-1000 / HW	Pilot Mount w/Bearing & Lining	----	428.770
	7.100 Sheave w/Bearing & Lining	----	504.350
	Friction Disc, Hub	180.440	----
XHW	Pilot Mount w/Bearing & Lining	----	1263.040
	8.000 Sheave w/Bearing & Lining	----	966.520
	Friction Disc, Hub	272.980	----

Tooth Clutches

MODEL	COMPONENTS	ROTATES WITH DRIVE	ROTATES WITH SHAFT
5H30	Ring, Plate, Hub, Flange	6.000	1.260
5H35	Ring, Plate, Hub, Flange	10.680	2.710
5H40	Ring, Plate, Hub, Flange	16.860	3.760
5H45	Ring, Plate, Hub, Flange	26.090	8.350
5H50	Ring, Plate, Hub, Flange	41.780	11.480
5H60	Ring, Plate, Hub, Flange	92.660	25.800
5H70	Ring, Plate, Hub, Flange	176.060	50.460
5H20P	Ring, Plate, Hub, Flange	2.160	0.350
5H30P	Ring, Plate, Hub, Flange	5.140	1.310
5H35P	Ring, Plate, Hub, Flange	11.280	2.880
5H40P	Ring, Plate, Hub, Flange	15.770	3.900
5H45P	Ring, Plate, Hub, Flange	25.970	8.920
5H50P	Ring, Plate, Hub, Flange	42.830	12.190
5H60P	Ring, Plate, Hub, Flange	94.400	27.370
5H70P	Ring, Plate, Hub, Flange	186.030	52.850
5H80P	Ring, Plate, Hub, Flange	347.600	73.450
5H100P	Ring, Plate, Hub, Flange	1241.080	372.970
5H30P-E	Ring, Plate, Hub, Flange	6.990	1.510
5H35P-E	Ring, Plate, Hub, Flange	12.700	3.200
5H40P-E	Ring, Plate, Hub, Flange	14.890	4.890
5H45P-E	Ring, Plate, Hub, Flange	29.030	10.010
5H50P-E	Ring, Plate, Hub, Flange	55.660	13.700
5H60P-E	Ring, Plate, Hub, Flange	100.940	30.550
5H30P-SP	Ring, Plate, Hub, Flange, Ball Carrier	8.380	2.120
5H35P-SP	Ring, Plate, Hub, Flange, Ball Carrier	16.030	4.340
5H40P-SP	Ring, Plate, Hub, Flange, Ball Carrier	22.630	6.080
5H45P-SP	Ring, Plate, Hub, Flange, Ball Carrier	35.590	12.430
5H50P-SP	Ring, Plate, Hub, Flange, Ball Carrier	55.160	16.620
5H60P-SP	Ring, Plate, Hub, Flange, Ball Carrier	115.880	36.620
5H70P-SP	Ring, Plate, Hub, Flange, Ball Carrier	231.640	48.100
5H80P-SP	Ring, Plate, Hub, Flange, Ball Carrier	394.010	73.450
5H30PSP-E	Ring, Plate, Hub, Flange, Ball Carrier	10.560	2.220
5H35PSP-E	Ring, Plate, Hub, Flange, Ball Carrier	18.110	4.600
5H40PSP-E	Ring, Plate, Hub, Flange, Ball Carrier	22.710	7.160
5H45PSP-E	Ring, Plate, Hub, Flange, Ball Carrier	39.860	13.400
5H50PSP-E	Ring, Plate, Hub, Flange, Ball Carrier	69.710	18.020
5H60PSP-E	Ring, Plate, Hub, Flange, Ball Carrier	125.150	39.390

Multi-Disc Clutches

MODEL	COMPONENTS	ROTATES WITH SHAFT	ROTATES WITH DRIVE
4H30P	Thrust Plate, Inner Plates, Flange, Hub	1.610	----
	Outer Plates, Driving Shell	----	8.070
4H35P	Thrust Plate, Inner Plates, Flange, Hub	3.490	----
	Outer Plates, Driving Shell	----	13.340
4H40P	Thrust Plate, Inner Plates, Flange, Hub	4.870	----
	Outer Plates, Driving Shell	----	14.460
4H45P	Thrust Plate, Inner Plates, Flange, Hub	10.740	----
	Outer Plates, Driving Shell	----	36.700
4H50P	Thrust Plate, Inner Plates, Flange, Hub	17.590	----
	Outer Plates, Driving Shell	----	60.400
4H60P	Thrust Plate, Inner Plates, Flange, Hub	42.480	----
	Outer Plates, Driving Shell	----	115.700
4H70P	Thrust Plate, Inner Plates, Flange, Hub	70.370	----
	Outer Plates, Driving Shell	----	211.100

Dual Plate Clutches

MODEL	COMPONENTS	ROTATES WITH SHAFT	ROTATES WITH DRIVE
DPC-9T	Cylinder, Piston, Facing, Hub	460.800	----
	Friction Discs, Housings, Pilot	----	460.800
	8.000 Sheave	----	161.300
	9.000 Sheave	----	270.700
DPC-11T	Cylinder, Piston, Facing, Hub	907.200	----
	Friction Discs, Housings, Pilot	----	1022.400
	Sheave	----	440.600
DPC-13T	Cylinder, Piston, Facing, Hub	2001.600	----
	Friction Discs, Housings, Pilot	----	2635.200
	8.000 Sheave	----	2757.600
DPC-15T	Cylinder, Piston, Facing, Hub	3470.400	----
	Friction Discs, Housings, Pilot	----	4176.000
	8.000 Sheave	----	5781.600

High Capacity Clutches

MODEL	COMPONENTS	ROTATES WITH SHAFT	ROTATES WITH DRIVE
DFE 1150-S or H	Disc	403.200	----
	Housing	----	3283.200
DFE 1650-S or H	Disc	2001.600	----
	Housing	----	10900.600
DFE 2200-S or H	Disc	6494.400	----
	Housing	----	31536.000
DFE 2500-S or H	Disc	10080.000	----
	Housing	----	50299.200
QFE 1150-S or H	Disc	806.400	----
	Housing	----	3902.400
QFE 1650-S or H	Disc	3542.400	----
	Housing	----	13032.000
QFE 2200-S or H	Disc	12960.000	----
	Housing	----	38044.600
QFE 2500-S or H	Disc	20059.200	----
	Housing	----	60393.600

Inertia Values of Various Components Continued

Clutch-Brakes

MODEL	COMPONENTS	ROTATES WITH DRIVE	ROTATES WITH SHAFT
BWCB	Pilot Mount & Bearing	----	.854
	Friction Disc, Lining & Hub	.850	----
FWCB	Pilot Mount, Lining & Bearing	----	4.7
	Disc & Hub	7.8	----
LWCB	Pilot Mount, Lining & Bearing	----	14.2
	Disc & Hub	19.0	----
MWCB	Pilot Mount, Lining & Bearing	----	57.2
	Disc & Hub	77.3	----
HWCB	Pilot Mount, Lining & Bearing	----	144.0
	Disc & Hub	232.0	----
MDU-625 & 875	Drive Disc, Hub, Bearing Race, Pilot Shaft & Washer	7.81	
MBU-625 & 875	Disc-Journal with Facing & Bearing Race		9.06
MIU-625 & 875	Input Shaft & Bearing Race	.12	
MDU-1125	Drive Disc, Hub, Bearing Race, Pilot Shaft & Washer	17.4	
MBU-1125	Disc-Journal with Facing & Bearing Race		20.5
MIU-1125	Input Shaft & Bearing Race	.34	
MDU-1375	Drive Disc, Hub, Bearing Race, Pilot Shaft & Washer	59.4	
MBU-1375	Disc-Journal with Facing & Bearing Race		65.0
MIU-1375	Input Shaft & Bearing Race	.85	
FMCBE-625	Drive Disc	1.49	
	Drvn. Disc, Fric. Lng., Out. Shaft		1.18
FMCBE-875	Drive Disc	6.20	
	Drvn. Disc, Fric. Lng., Out. Shaft		7.10
FMCBE-1125	Drive Disc	24.20	
	Drvn. Disc, Fric. Lng., Out. Shaft		30.30
FMCBE-1375	Drive Disc	61.60	
	Drvn. Disc, Fric. Lng., Out. Shaft		70.00
FMCBES-625	Drive Disc	6.20	
	Drvn. Disc, Fric. Lng., Out. Shaft		7.10
FMCBES-875	Drive Disc	6.20	
	Drvn. Disc, Fric. Lng., Out. Shaft		7.10
FMCBES-1125	Drive Disc	24.20	
	Drvn. Disc, Fric. Lng., Out. Shaft		30.30
FMCBES-1375	Drive Disc	61.60	
	Drvn. Disc, Fric. Lng., Out. Shaft		70.00
FMCE-625	Drive Disc	1.49	
	Drvn. Disc, Fric. Lng., Out. Shaft		1.18
FMCB-130 19 AND 24	Drive Disc	6.20	
	Drvn. Disc, Fric. Lng., Out. Shaft		7.10
FMCB-7 28 AND 38	Drive Disc	24.20	
	Drvn. Disc, Fric. Lng., Out. Shaft		30.30
FMCB-8 38 AND 42	Drive Disc	61.60	
	Drvn. Disc, Fric. Lng., Out. Shaft		70.00

Torque Limiters

MODEL	COMPONENTS	ROTATES WITH SHAFT (DISENGAGED)	ROTATES WITH DRIVE (ENGAGED)
TL 10	Drive Ring, Backing Plate & Hub	1.48	----
	Drive Flange	----	6.76
TL 15	Drive Ring, Backing Plate & Hub	1.48	----
	Drive Flange	----	6.76
TL 20	Drive Ring, Backing Plate & Hub	6.05	----
	Drive Flange	----	13.54
TL 30	Drive Ring, Backing Plate & Hub	9.94	----
	Drive Flange	----	31.39
TL 40	Drive Ring, Backing Plate & Hub	25.20	----
	Drive Flange	----	54.72
TL 50	Drive Ring, Backing Plate & Hub	35.00	----
	Drive Flange	----	94.75
TL 60	Drive Ring, Backing Plate & Hub	71.00	----
	Drive Flange	----	165.89
TL 70	Drive Ring, Backing Plate & Hub	129.89	----
	Drive Flange	----	364.46
TL 80	Drive Ring, Backing Plate & Hub	175.25	----
	Drive Flange	----	507.31

Dual Plate Brakes

MODEL	COMPONENTS	ROTATES WITH SHAFT	ROTATES WITH DRIVE
DPB-9T	Friction Discs, Housing & Hub	443.0	----
DPB-11T	Friction Discs, Housing & Hub	1036.0	----
DPB-13T	Friction Discs, Housing & Hub	2694.0	----
DPB-15T	Friction Discs, Housing & Hub	4259.0	----

Metric Clutches–All values are expressed in (kg - cm^2).

Metric Friction Clutches

MODEL	COMPONENTS	ROTATES WITH SHAFT	ROTATES WITH DRIVE
B-275	Pilot Mount w/Bearing	----	2.500
	Friction Disc, Hub	2.864	----
F-450	Pilot Mount w/Bearing & Lining	----	15.807
	Friction Disc, Hub	14.000	----
L-600	Pilot Mount w/Bearing & Lining	----	80.350
	Friction Disc, Hub	47.168	----
M-800	Pilot Mount w/Bearing & Lining	----	372.350
	Friction Disc, Hub	185.070	----
H-1000	Pilot Mount w/Bearing & Lining	----	1254.150
	Friction Disc, Hub	527.790	----

Metric Tooth Clutches

MODEL	COMPONENTS	ROTATES WITH DRIVE	ROTATES WITH SHAFT
5H30	Ring, Plate, Hub, Flange	17.550	3.690
5H35	Ring, Plate, Hub, Flange	31.240	7.930
5H40	Ring, Plate, Hub, Flange	49.320	11.000
5H45	Ring, Plate, Hub, Flange	76.310	24.420
5H50	Ring, Plate, Hub, Flange	122.210	33.580
5H60	Ring, Plate, Hub, Flange	271.030	75.470
5H70	Ring, Plate, Hub, Flange	514.980	147.600
5H30P	Ring, Plate, Hub, Flange	15.030	3.830
5H35P	Ring, Plate, Hub, Flange	32.990	8.420
5H40P	Ring, Plate, Hub, Flange	46.130	11.410
5H45P	Ring, Plate, Hub, Flange	75.960	26.090
5H50P	Ring, Plate, Hub, Flange	125.280	35.660
5H60P	Ring, Plate, Hub, Flange	276.120	80.060
5H70P	Ring, Plate, Hub, Flange	544.140	154.590
5H80P	Ring, Plate, Hub, Flange	1016.730	214.840
5H30P-E	Ring, Plate, Hub, Flange	20.446	4.420
5H35P-E	Ring, Plate, Hub, Flange	37.148	9.360
5H40P-E	Ring, Plate, Hub, Flange	43.553	14.300
5H45P-E	Ring, Plate, Hub, Flange	84.913	29.280
5H50P-E	Ring, Plate, Hub, Flange	162.810	40.070
5H60P-E	Ring, Plate, Hub, Flange	295.250	89.360
5H30P-SP	Ring, Plate, Hub, Flange, Ball Carrier	24.510	6.200
5H35P-SP	Ring, Plate, Hub, Flange, Ball Carrier	46.890	12.690
5H40P-SP	Ring, Plate, Hub, Flange, Ball Carrier	66.190	17.780
5H45P-SP	Ring, Plate, Hub, Flange, Ball Carrier	104.100	36.360
5H50P-SP	Ring, Plate, Hub, Flange, Ball Carrier	161.340	48.610
5H60P-SP	Ring, Plate, Hub, Flange, Ball Carrier	338.950	107.110
5H70P-SP	Ring, Plate, Hub, Flange, Ball Carrier	677.550	140.690
5H80P-SP	Ring, Plate, Hub, Flange, Ball Carrier	1152.480	214.840
5H30PSP-E	Ring, Plate, Hub, Flange, Ball Carrier	30.890	6.493
5H35PSP-E	Ring, Plate, Hub, Flange, Ball Carrier	52.970	13.455
5H40PSP-E	Ring, Plate, Hub, Flange, Ball Carrier	66.430	20.943
5H45PSP-E	Ring, Plate, Hub, Flange, Ball Carrier	116.590	39.530
5H50PSP-E	Ring, Plate, Hub, Flange, Ball Carrier	203.900	52.710
5H60PSP-E	Ring, Plate, Hub, Flange, Ball Carrier	366.064	115.220

Inertia (WK2)

The value of WK^2 is important for applications involving time, cyclic duty or when starting or stopping heavy loads. Use one or all of the three methods as shown here to estimate the inertia.

1. The inertia of solid steel shafting is given in the following table. The values shown are for one inch of shaft length.

Dia. (In.)	WK^2 (Lb. Ft.^{2})	Dia. (In.)	WK^2 (Lb. Ft.^{2})	Dia. (In.)	WK^2 (Lb. Ft.^{2})
0.750	0.00006	7.500	0.6110	13.250	5.9600
1.000	0.0002	7.750	0.6990	13.500	6.4200
1.250	0.0005	8.000	0.7910	13.750	6.9100
1.500	0.0010	8.250	0.8950	14.000	7.4200
1.750	0.0020	8.500	1.0000	14.250	7.9700
2.000	0.0030	8.750	1.1300	14.500	8.5400
2.250	0.0050	9.000	1.2700	14.750	9.1500
2.500	0.0080	9.250	1.4100	15.000	9.7500
2.750	0.0110	9.500	1.5500	16.000	12.6100
3.000	0.0160	9.750	1.7500	17.000	16.0700
3.500	0.0290	10.000	1.9300	18.000	20.2100
3.750	0.0380	10.250	2.1300	19.000	25.0800
4.000	0.0490	10.500	2.3500	20.000	30.7900
4.250	0.0630	10.750	2.5800	21.000	37.4300
4.500	0.0790	11.000	2.8300	22.000	45.0900
5.000	0.1200	11.250	3.0900	23.000	53.8700
5.500	0.1770	11.500	3.3800	24.000	63.8600
6.000	0.2500	11.750	3.6800	25.000	75.1900
6.250	0.2960	12.000	4.0000	26.000	87.9600
6.500	0.3450	12.250	4.3500	27.000	102.3000
6.750	0.4020	12.500	4.7200	28.000	118.3100
7 000	0.4640	12.750	5.1100	29.000	136.1400
7.250	0.5350	13.000	5.5800	30.000	155.9200

To determine WK^2 of a given shaft or disc, multiply the WK^2 given in the chart by the length of shaft, or thickness of disc, in inches.

NOTE: For hollow shafts, subtract WK^2 of the I.D. from WK^2 of the O.D. and multiply by length.

2. For solid cylinders of a given weight, WK^2 is estimated from the formula:

$$WK^2 = W\left(\frac{R^2}{2}\right)$$

Where: WK^2 = inertia in lb. ft.^{2}
R = cylinder radius in ft.
W = weight in lbs.

3. For solid or hollow cylinders, the inertia is calculated by the following equations:

Solid Cylinder

$$WK^2 = .000681\ p\ LD^4$$

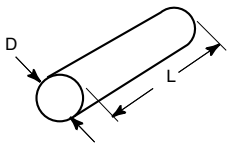

Hollow Cylinder

$$WK^2 = .000681\ p\ L\left(D_2^{\ 4} - D_1^{\ 4}\right)$$

WK^2 = lb ft^2
Where: D, D_1, D_2, L = Inches
P = lb/in^3
Where: P (Aluminum) = .0924
P (Cast Iron) = .260
P (Steel) = .282

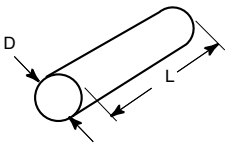

Calculate the inertia of complex, concentric, rotating parts by breaking the part into simple cylinders, calculating their inertia and summing the values of each.

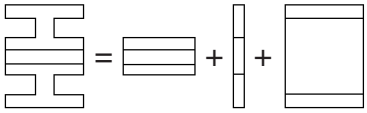

In applications where the speed of the load is different from the speed at the clutch or brake, the value of WK^2 is referred to as reflected inertia.

Torque

English

Calculate the required torque. Estimate the torque requirements based on the rated horsepower of the prime mover.

$$T = \frac{63000(HP)K}{RPM}$$

T = torque in in. lbs.
HP = horsepower
RPM = Speed at clutch or brake

If the driven load has heavy rotating parts that must be started or stopped in a specific time, evaluate the torque from the formula:

$$T = \frac{.039\ (WK^2)\Delta RPM}{t}$$

T = average torque in in. lbs.
WK^2 = total inertia load in lb. ft.^{2}
RPM = initial RPM – final RPM
t = time in seconds for ΔRPM

The time (t) in seconds required to accelerate or decelerate a rotating mechanism is estimated as follows:

$$t = \frac{.039\ (WK^2)\ RPM}{T}$$

t = required starting or stopping time
WK^2 = total inertia load in lb. ft.^{2}
PRPM = speed at the clutch or brake
T = rated clutch or brake torque

Metric

$$T = \frac{P(9545)K}{n}$$

T = torque in Newton meters (Nm)
P = transmitted power in kilowatts (kW)
n = speed at clutch or brake

If the driven load has heavy rotating parts that must be started or stopped in a specific time, evaluate the torque from the formula.

$$T = \frac{(J)\Delta n}{t(9.55)}$$

T = average torque in Newton meters (Nm)
J = total inertia load in kgm^2
Δn = initial RPM – final RPM
t = time in seconds for Δn

The time (t) in seconds required to accelerate or decelerate a rotating mechanism is estimated as follows:

$$t = \frac{(J)\ n}{(9.55)}$$

t = required starting or stopping time in seconds
J = total inertia load in kgm^2
Δn = speed at the clutch or brake
T = rated clutch or brake torque

NOTE — A service factor (K) is required to determine the actual torque that the clutch must deliver. For example, some electric motors will deliver three times their rated horsepower for a short period of time. The clutch or brake must be capable of handling the maximum possible output.

NOTE — Torque increases as the speed decreases. Mount the clutch on the highest speed shaft available.

Thermal Characteristics

Check the clutch or brake heat sink capacity for high inertia starts or stops and the continuous thermal horsepower dissipation requirement for cyclic starts and stops.

English

1.Calculate the energy per cycle (E_c) absorbed by the clutch or brake each start or stop by the formula.

$E_c = .00017\ (WK^2)\ (N_2 - N_1)^2$

E_c = rotational energy in ft lbs. N_1 = Initial RPM

WK^2 = total inertia load in lb. ft.^{2} N_2 = Finial RPM

Select a clutch or brake that has a heat sink capacity which exceeds the energy in ft. lbs. produced during each start or stop.

2.Determine the continuous thermal horsepower (Hp_t) requirement.

$$HP_t = \frac{(E_c)CPM}{33000}$$

E_c = rotational energy in ft. lbs. when the clutch or brake is applied.

CPM = the number of starts or stops per minute.

Select a clutch or brake that has a continuous thermal horsepower rating at operating speed that exceeds the thermal horsepower requirement. Refer to the charts on page 363.

Permissible cycles per minute are estimated using the formula:

$$CPM = \frac{HPt(33{,}000)}{E_c}$$

Hp_t = rated clutch or brake continuous thermal HP dissipation

E_c = rotational energy in ft. lb. when the clutch or brake is applied

Metric

1.Calculate the energy per cycle (E_c) absorbed by the clutch or brake each start or stop by the formula:

$$E_c = \frac{J\ (\Delta n)^2}{182.4}$$

E_c = rotational energy in Joules when the clutch or brake is applied

J = total inertia load in kgm^2

Δn = initial RPM – final RPM

Select a clutch or brake that has a heat sink capacity which exceeds the energy in Joules produced during each start or stop.

2.Determine the required continuous thermal in kw (P_{th})

$$P_{th} = \frac{Ec/60\ (CPM)}{1000}$$

E_c = rotational energy in Joules when the clutch or brake is applied.

CPM = the number of starts or stops per minute.

Select a clutch or brake that a continuous thermal dissipation rating at operation speed that exceeds the thermal dissipation requirement.

Permissible cycles per minute are estimated using the formula:

$$CPM = \frac{Pth\ 60}{E_c}$$

P_{th} = Rated clutch or brake continuous thermal dissipation

E_c = Rotational energy in Joules when the clutch is applied

Cycle duty theoretically can be as much as 100 CPM or more. However, the practical limit depends upon the ability of the clutch or brake to dissipate heat rather clutch or brake response time. Each time a machine starts or stops, heat is generated at the clutch or brake interface. This heat energy is equal to energy per cycle (E_c) of the rotational inertia at operating speed.

Heat Sink Capcities

Friction Clutches

Model	Heat Sink Capacity (ft. lbs.)
M	1,900
BW	5,650
F-450/FW	30,000
L-600/LW	60,000
M-800/MW	110,000
H-1000/HW	230,000
XHW	200,000

Dual Plate Clutches

Model	Heat Sink Capacity (ft. lbs.)
DPC-9T	220,000
DPC-11T	360,000
DPC-13T	690,000
DPC-15T	820,000

High Capacity Clutches

Model	Heat Sink Capacity (ft. lbs.)
DFE-1150	390,000
DFE-1650	870,000
DFE-2200	1,187,000
DFE-2500	1,460,000
QFE-1150	780,000
QFE-1650	1,740,000
QFE-2200	2,374,000
QFE-2500	2,920,000

Metric Clutches

Model	Heat Sink Capacity
B-275	10,000 Joules
F-450	41,000 Joules
L-600	81,000 Joules
M-800	149,000 Joules
H-1000	312,000 Joules

Friction Brakes

Model	Heat Sink Capacity (ft.lbs.)
M	1,900
BW	5,650
S-450	30,000
S-600	60,000
S-800	125,000
S-1000	200,000
T-450	35,000
T-600	60,000
T-800	125,000
T-1000	170,000

Spring Engaged Brakes

Model	Heat Sink Capacity (ft. lbs.)
TSE-450	35,000
TSE-600	60,000
TSE-800	125,000
TSE-1000	170,000

Brake Disc's for Caliper Brakes

Model	Heat Sink Capacity (ft. lbs.)
12 Standard	265,000
14 Standard	320,800
16 Standard	376,600
18 Standard	432,400
20 Standard	529,400
22 Standard	636,100
24 Standard	703,000
18 Ventilated	1,500,000
21 Ventilated	2,100,000
24 Ventilated	2,700,000

High Capacity Brakes

Model	Heat Sink Capacity (ft. lbs.)
DFB-1150	390,000
DFB-1650	870,000
DFB-2200	1,187,000
DFB-2500	1,460,000
QFB-1150	780,000
QFB-1650	1,740,000
QFB-2200	2,374,000
QFB-2500	2,920,000

Metric Brakes

Model	Heat Sink Capacity
S-450	41,000 Joules
S-600	81,000 Joules
S-800	170,000 Joules
S-1000	271,000 Joules

Thru-Shaft Clutch Brakes

Model	Heat Sink Capacity (ft. lbs.) Clutch / Brake
FWCB	25,000 / 25,000
LWCB	45,000 / 25,000
MWCB	90,000 / 45,000
HWCB	125,000 / 120,000

Thermal Horsepower Vs. RPM

F-450 & FW Clutches

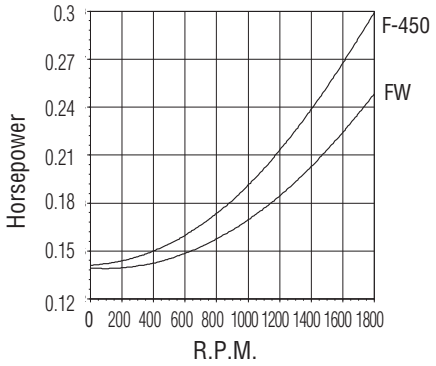

L-600 & LW Clutches

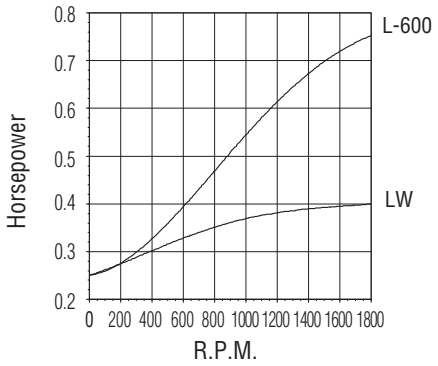

M-800 & MW Clutches

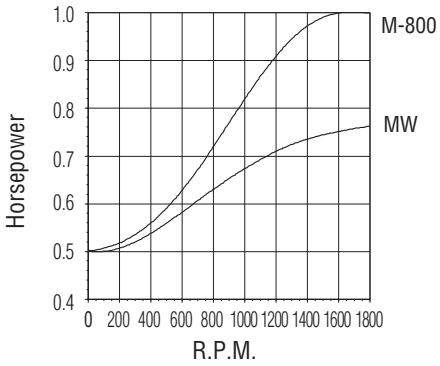

H-1000, HW & XHW Clutches

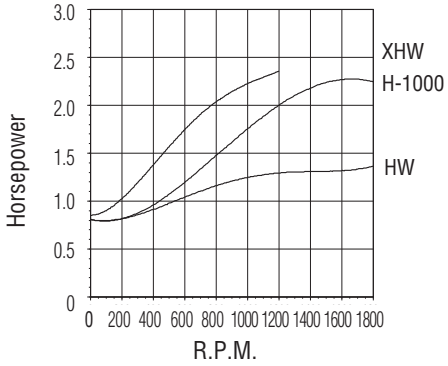

S & T-450 Brakes

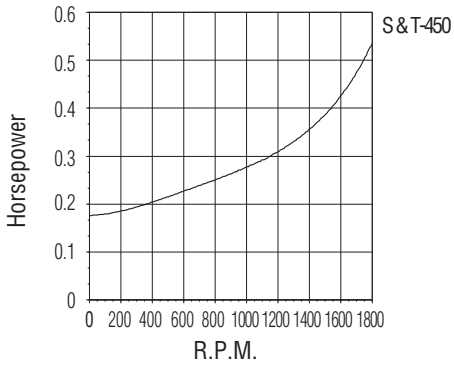

S & T-600 Brakes

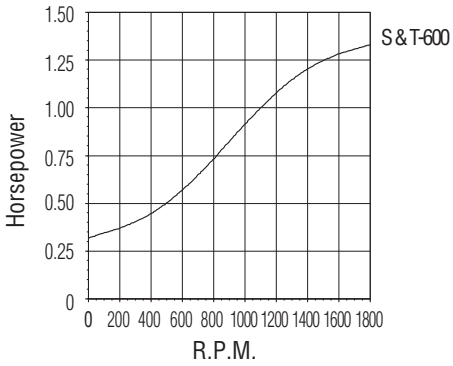

S & T-800 Brakes

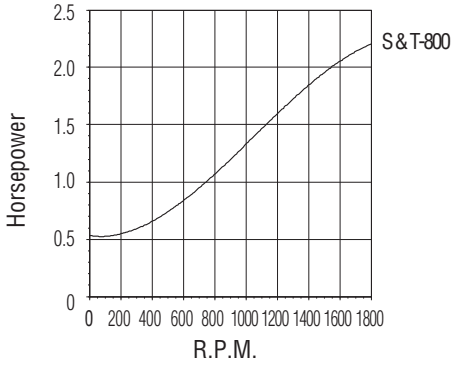

S & T-1000 Brakes

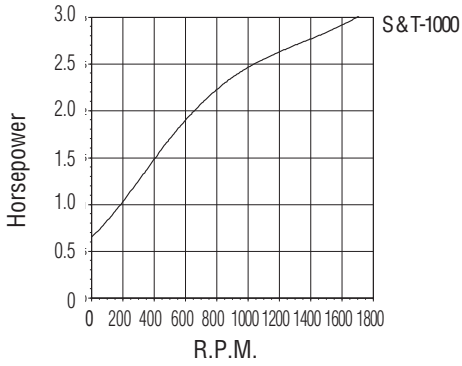

DPC-9, 11, 13, 15 Clutches

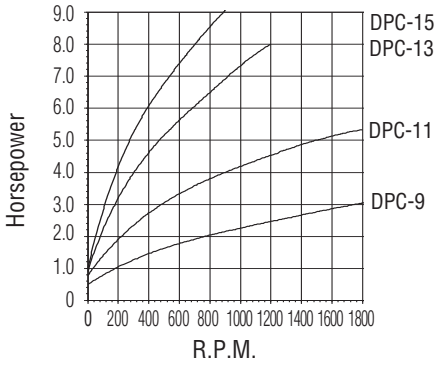

S & T-1200 Brakes

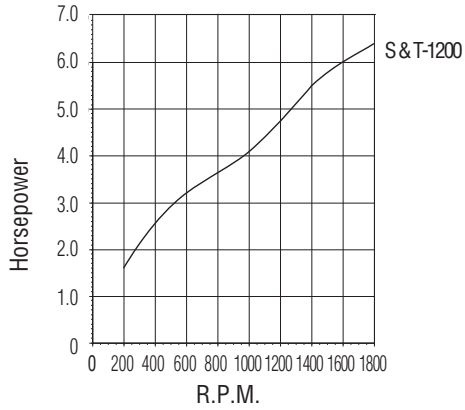

S & T-1400 Brakes

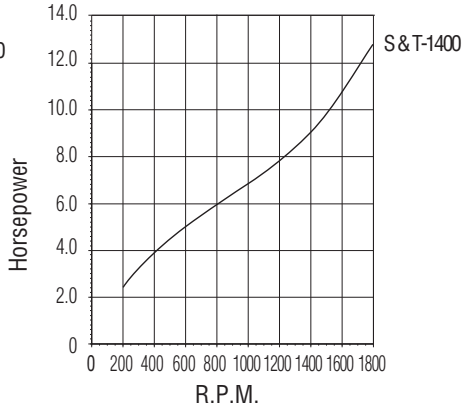

Response Time Data For Clutches and Brakes using "Air Champ®" Valves

All data obtained by using 8 inch long 1/4 inch diameter hose, 1/8 inch NPT fittings and quick exhaust valves.

t_v = Valve delay time
tv = 5 msec for .062, 3 way valve
tv = 8 msec for 4 way valve, pilot operated
tv = 70 msec for 4 way valve, spring operated

t_1 = Time from start of valve open to start of torque rise

t_2^{90} = Time from start of torque rise to 90% value of torque

t_2^{100} = Time from start of torque rise to 100% value or torque

t^3 = Time from start of valve exhaust to start of torque decay

t_4^{10} = Time from start of torque decay to 10% valve of torque

t_4^0 = Time from start of torque decay to 0% value of torque

Obtain CR values for units from table page 365 and 366. Read times at 100 PSIG directly from CR vs Response Time graphs below

3-Way Valve Response Times

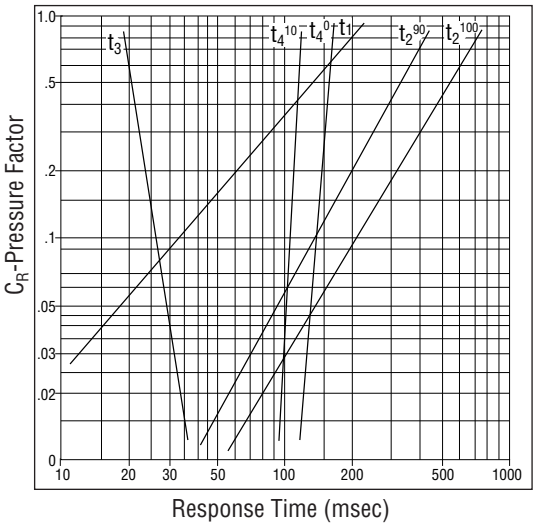

4-Way Valve Response Times

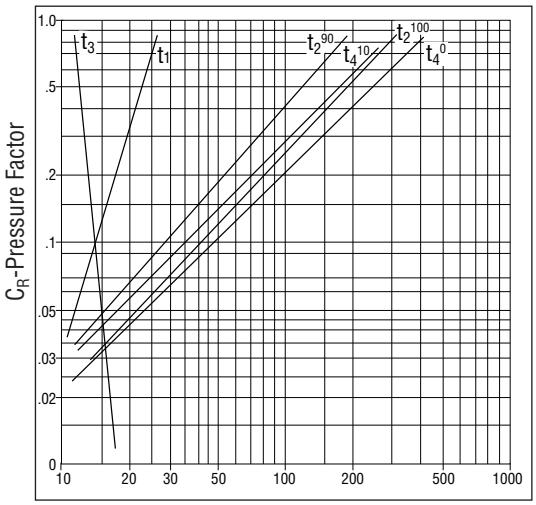

Correction factor for operating pressures less than 100 PSIG Use formula $t_p = C_p\ (t)_{100}$

t_p = Response time at pressure P

C_p = Response pressure factor at pressure P from graph.

t_{100} = Response time at 100 PSIG

Correction factor for hose lengths greater than 8 inches (1-10 FT) Multiply all response times by C_L where $C_L = \dfrac{t_1 + .7\ (L - .66)}{t_1}$

t_1 Found below at operating pressure
L Length of hose in feet

3-Way Correction Factor Graph

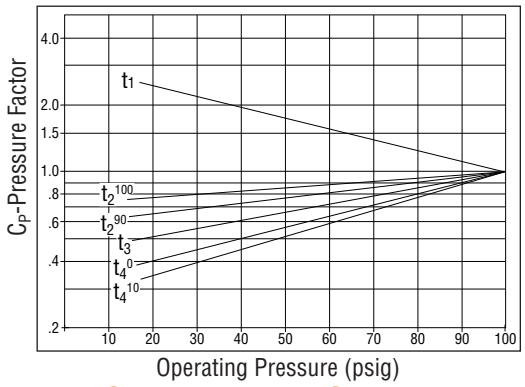

4-Way Correction Factor Graph

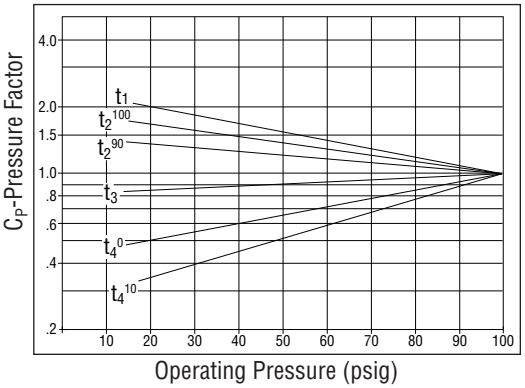

Torque Rise Response

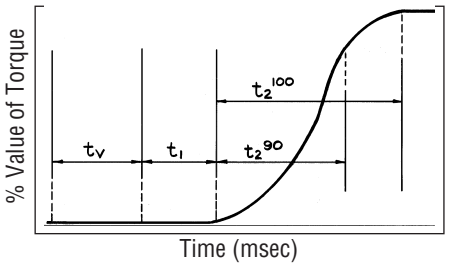

Torque Decay Response

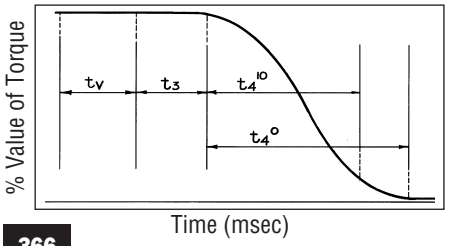

EXAMPLE: Determine the various response times defined for a 625 Modular Brake operating at 75 PSIG using a Nexen 4-way valve.

SOLUTION: I. Determine the response times at 100 PSIG.

1.) Obtain the response factor, C_R, from the Clutch and Brake Data Table page 365 and 366 C_R = .096.

2.) Read the response times at 100 PSIG directly off the 4-way C_R vs. Response Time graph; t_1 = 14 msec, t_2^{90} = 27 msec, t_3 = 14 msec, t_4^{10} = 34 msec, t_4^0 = 46 msec.

II. Correct the response times for 75 PSIG.

1.) Obtain the C_p factor from the 4-way Correction Factor Graph.

2.) Calculate the corrected response times using the formula $(t)_{75} = C_P\ (t)_{100}$.

i.e. $(t_1)_{75}$ = (1.25) (14 msec) = 17.5 msec

$(t_2^{90})_{75}$ = (1.08) (27 msec) = 29.2 msec

likewise the following are obtained: $(t_2^{100})_{75}$ = 46 msec, $(t_3)_{75}$ = 13.3 msec

$(t_4^{10})_{75}$ = 24 msec, $(t_4^0)_{75}$ = 36.8 msec

Clutch And Brake Air Volume/RateData

Friction Clutches, inch and metric models

Model	Air Chamber Volume (Vn) New Facings	Air Chamber Volume (Vo) Old Facings	Response Factor (Cr)	Thermal Dissipation (HPt)
M	0.050	0.104	0.009	0.060
BW	0.201	0.630	0.038	0.130
F-450	0.266	0.695	0.049	0.250
L-600	0.327	0.855	0.060	0.400
M-800	0.644	2.000	0.119	0.750
H-1000	1.246	5.248	0.230	1.250
XHW	2.152	9.856	0.397	2.500

Tooth Clutches, inch and metric models

5H30	0.439	N/A	0.060	N/A
5H35	0.492	N/A	0.067	N/A
5H40	0.639	N/A	0.087	N/A
5H45	0.763	N/A	0.104	N/A
5H50	0.994	N/A	0.136	N/A
5H60	1.450	N/A	0.198	N/A
5H70	1.731	N/A	0.237	N/A
5H20P	0.250	N/A	0.034	N/A
5H30P/P-E	0.439	N/A	0.060	N/A
5H35P/P-E	0.492	N/A	0.067	N/A
5H40P/P-E	0.639	N/A	0.087	N/A
5H45P/P-E	0.763	N/A	0.104	N/A
5H50P/P-E	0.994	N/A	0.136	N/A
5H60P/P-E	1.450	N/A	0.198	N/A
5H70P	1.731	N/A	0.237	N/A
5H80P	2.647	N/A	0.362	N/A
5H100P	3.380	N/A	0.460	N/A
5H30P-E	.439	N/A	0.060	N/A
5H35P-E	.492	N/A	0.067	N/A
5H40P-E	.639	N/A	0.087	N/A
5H45P-E	.763	N/A	0.104	N/A
5H50P-E	.994	N/A	0.136	N/A
5H60P-E	1.450	N/A	0.198	N/A
5H30P-SP/SP-E	1.103	N/A		N/A
5H35P-SP/SP-E	1.236	N/A	Dependent	N/A
5H40P-SP/SP-E	1.605	N/A	Upon	N/A
5H45P-SP/SP-E	1.917	N/A	Engagement	N/A
5H50P-SP/SP-E	2.496	N/A	RPM	N/A
5H60P-SP/SP-E	3.641	N/A		N/A
5H70P-SP/SP-E	4.348	N/A		N/A
5H80P-SP/SP-E	6.649	N/A		N/A

Multi-Disc Clutches

4H30P	0.206		0.041	0.090
4H35P	0.284	When	0.056	0.120
4H40P	0.330	Properly	0.066	0.150
4H45P	0.450	Applied	0.089	0.180
4H50P	0.477	Wear Is	0.095	0.190
4H60P	0.854	Minimal	0.140	0.220
4H70P	1.035		0.160	0.280

Dual Plate Clutches

DPC-9T	2.163	11.651	0.309	3.300
DPC-11T	4.803	23.288	0.500	5.500
DPC-13T	7.326	35.525	0.702	8.000
DPC-15T	10.818	52.455	1.133	9.000

Friction Brakes, inch and metric models

Model	Air Chamber Volume (Vn) New Facings	Air Chamber Volume (Vo) Old Facings	Response Factor (Cr)	Thermal Dissipation (HPt)
M	0.050	0.104	0.009	0.060
BW	0.201	0.630	0.038	0.130
S-450	0.629	1.422	0.090	0.520
S-600	1.024	2.108	0.124	1.300
S-800	1.039	3.307	0.199	2.230
S-1000	1.739	8.656	0.398	3.000
T-450	0.629	1.422	0.090	0.520
T-600	1.024	2.108	0.124	1.300
T-800	1.039	3.307	0.199	2.230
T-1000	1.739	8.656	0.398	3.000

Caliper Brakes

625	0.019	0.095	0.003	See Disc
1000	0.049	0.245	0.008	See Disc
DB	0.400	0.750	0.022	See Disc
BC288A	2.120	6.520	0.072	See Disc
BC425A	3.620	13.260	0.158	See Disc
BC288S	3.760	N/A	0.072	See Disc
BC425S	6.240	N/A	0.158	See Disc
BD, Air	2.000	16.000	0.159	See Disc
BD, Spring	41.600	N/A	0.317	See Disc
SPC, Air	2.000	16.000	0.159	See Disc
SPC, Spring	41.600	N/A	0.312	See Disc

Brake Disc's for Caliper Brakes

DB,10" Disc	—	—	—	0.650
DB,12"Disc	—	—	—	0.950
DB,14" Disc	—	—	—	1.430
DB,16" Disc	—	—	—	2.930

Dual Plate Brakes

DPB-9T	2.163	11.651	0.309	3.300
DPB-11T	4.803	23.288	0.500	5.500
DPB-13T	7.326	35.525	0.702	8.000
DPB-15T	10.818	52.455	1.133	9.000

Modular NEMA C Flange Clutch

Size 625	0.245	0.835	0.075	0.400
Size 875	0.245	0.835	0.075	0.400
Size 1125	0.397	1.058	0.095	0.500
Size 1375	0.413	1.895	0.137	0.750

Modular NEMA C FlangeBrake

Size 625	0.550	1.392	0.096	0.230
Size 875	0.550	1.392	0.096	0.230
Size 1125	1.276	2.610	0.153	0.330
Size 1375	1.600	3.781	0.191	0.500

Note: Vn = Air chamber volume, in cubic inches, with new facings
Vo = Air chamber volume, in cubic inches, with old facings
HPt = Continuous Thermal dissipation at 1800 RPM except Model XHW at 1200 RPM
Cr = Response Factor; Cr = Air Chamber area ÷ by 100 psi minus pressure to overcome the return springs.

Clutch And Brake Air Volume/RateData (continued next page)

Clutch And Brake Air Volume/RateData (continued)

Model	Air Chamber Volume (Vn) New Facings	Air Chamber Volume (Vo) Old Facings	Response Factor (Cr)	Thermal Dissipation (HPt)
Thru-Shaft Clutch Brakes				
FWCB	0.264 / 0.638	0.698 / 1.431	0.049 / 0.090	0.250 / 0.520
LWCB	0.327 / 0.629	0.864 / 1.422	0.060 / 0.090	0.400 / 0.520
MWCB	0.633 / 0.771	1.988 / 2.394	0.119 / 0.142	0.750 / 1.300
HWCB	1.268 / 1.013	5.269 / 5.533	0.230 / 0.260	1.250 / 2.230
FCDB, 10" Disc	0.266 / 0.400	0.695 / 0.750	0.049 / 0.022	0.250 / 0.650
LCDB, 10" Disc	0.327 / 0.400	0.855 / 0.750	0.060 / 0.022	0.400 / 0.650
LCDB, 12" Disc	0.327 / 0.400	0.855 / 0.750	0.060 / 0.022	0.400 / 0.950
MCDB, 12" Disc	0.644 / 0.400	2.000 / 0.750	0.119 / 0.022	0.750 / 0.950
MCDB, 14" Disc	0.644 / 0.400	2.000 / 0.750	0.119 / 0.022	0.750 / 1.430
HCDB, 16" Disc	1.246 / 0.400	5.248 / 0.750	0.230 / 0.022	1.250 / 2.930
FMCB Clutches				
FMCB-130	0.500	1.410	0.065	0.180
FMCB-7	0.770	2.300	0.106	0.330
FMCB-8	1.290	3.880	0.179	0.440
FMCB Brakes				
FMCB-130	0.550	1.570	0.072	0.180
FMCB-7	0.890	2.680	0.124	0.330
FMCB-8	1.440	4.330	0.201	0.440
FMCBE Clutches				
FMCBE-625	0.398	1.080	0.055	0.140
FMCBE-875	0.498	1.410	0.065	0.180
FMCBE-1125	0.712	2.040	0.094	0.330
FMCBE-1375	1.140	3.250	0.151	0.440
FMCBE Brakes				
FMCBE-625	0.438	1.190	0.060	0.140
FMCBE-875	0.548	1.570	0.072	0.180
FMCBE-1125	0.849	2.430	0.112	0.330
FMCBE-1375	1.300	3.710	0.172	0.440
FMCBES Clutches				
FMCBES-625	0.660	1.980	0.092	0.140
FMCBES-875	0.660	1.980	0.092	0.180
FMCBES-1125	0.990	2.970	0.137	0.330
FMCBES-1375	1.710	5.130	0.238	0.440
TORQUE LIMITERS				
TL10 & 15	0.450		0.032	
TL20	0.780		0.057	
TL30	1.390		0.067	
TL40	1.560	Not	0.104	Not
TL50	1.800	Applicable	0.136	Applicable
TL60	2.620		0.198	
TL70	3.120		0.227	
TL80	4.700		0.342	

New Unit Torque

The initial torque on new units can be 30% to 40% less than the catalog value until the friction facing and friction disc are lapped or worn in .

Friction Facings

The torque ratings expressed in this catalog are the products equipped with standard friction facings. Friction facings are identified with two color code stripes on the outside edge.

Two red stripes - Standard Facings	100% Std Torque
Two green stripes - LOCO Facings	60% Std Torque
Two blue stripes - Ultra-LOCO Facings	40% Std Torque
Two purple stripes - HICO Facings	140% Std Torque

Loco Friction Facings

"Air Champ®" has special low coefficient (LOCO) and Ultra LOCO friction facings available for a number of clutches, brakes and clutch/brakes.

Typical uses for LOCO and Ultra LOCO friction facings include soft start or stop applications where more slippage is desired. Soft starts increase engagement time which reduces peak input thermal spikes. LOCO and Ultra LOCO friction facings are used in constant slip applications where a large unit is required for high continuous thermal dissipation. Contact your local Nexen Distributor for availability.

Hico Friction Facings

"Air Champ's" high coefficient (HICO) friction facings are available for applications where higher torque is required. With HICO friction facings the unit's static torque capacity is approximately 40% higher than catalog rated torque.

Typical uses for HICO friction facings include emergency stops and starts.

HICO friction facings are used to increase a clutch or brake's torque output when a large, standard unit will not fit a particular envelope dimension.

Contact your local Nexen Distributor for availability.

Free Air Volume Consumption

Compression Factor (C_F) Vs. Operating Pressure

Cubic inches of free air consumed per cycle = C_F multiplied by the air chamber volume obtained from the Clutch and Brake Data tables.

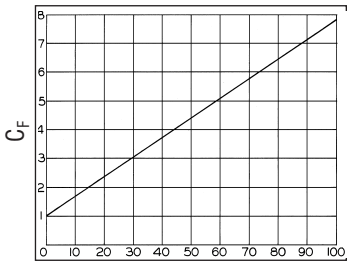

Air Flow Rate In CFM At 70°F

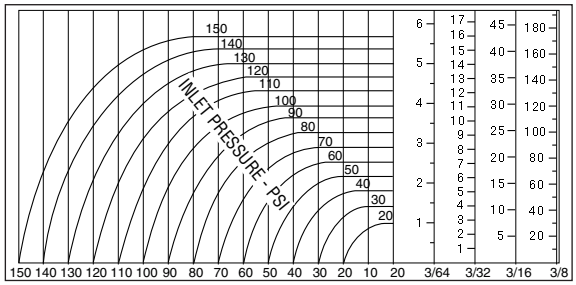

Misalignment Tables

Friction Clutches

The following table and drawing represents misalignment capabilities for Dodge Taper-Lock Poly Disc Couplings. The values are based upon the coupling maximum capability for individual misalignment.

These tabulated values may not be combined. Review the drawing and the table for information regarding the Clutch and application.

Dodge Taper-Lock Poly Disc Couplings

Measured Variation at Points 180 degrees Apart

Clutch Model	Coupling Size (In)	Parallel Maximum (In)	Angular Maximum (In)	Axial Float Maximum Value from recommended Initial Spacing (In)
F-450	2.625	0.015	0.040	' +0.125
L-600	4.000	0.015	0.064	' +0.125
M-800	7.000	0.015	0.112	' +0.125
H-1000	8.000	0.015	0.128	' +0.125
XHW	10.000	0.015	0.160	' +0.188

Clutch-Brakes, Thru-Shaft Mounted

The following table and drawing represents misalignment capabilities for Dodge Taper-Lock Poly Disc Couplings. The values are based upon the coupling maximum capability for individual misalignment. These tabulated values may not be combined. Review the drawing and the table for information regarding the Clutch-Brake and application.

Dodge Taper-Lock Poly Disc Couplings

Measured Variation at Points 180 degrees Apart

Clutch Model	Coupling Size (In)	Parallel Maximum (In)	Angular Maximum (In)	Axial Float Maximum Value from recommended Initial Spacing (In)
BWCB	N/A	N/A	N/A	N/A
FWCB	2.625	0.015	0.040	± 0.125
LWCB	4.000	0.015	0.064	± 0.125
MWCB	7.000	0.015	0.112	± 0.125
HWCB	8.000	0.015	0.128	± 0.125
FCDB	2.625	0.015	0.040	± 0.125
LCDB	4.000	0.015	0.064	± 0.125
MCDB	7.000	0.015	0.112	± 0.125
HCDB	8.000	0.015	0.128	± 0.125

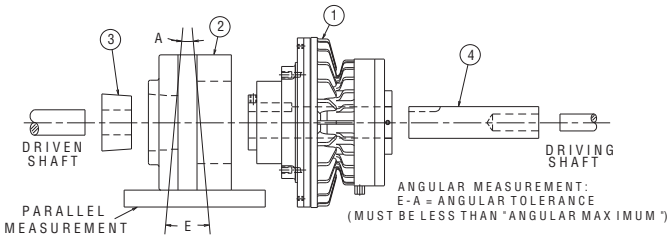

To Order Coupling Type Clutch — Specify

1. Product Number of Pilot Mount Unit
2. Coupling Half (includes Dodge coupling half, Poly-Disc & adapter)
3. Taper Lock Bushing
4. Shaft Extension/Sleeve Bushing(if needed)*

*Same length as clutch.

Tooth Clutches (5H), Torque Limiters (TL) and Multiplate Clutches (4H)

Flexible Couplings

Use these tables if you are attaching a Flexible Coupling to a Tooth Clutch (5HP, 5HP-E, 5HP-SP, 5HPSP-E), Multi-Disc Clutch (4HP) or Torque Limiter (TL-A, TL-AE, TL-AC).

The following tables represent misalignment capabilities for Single & Double Flex Coupling Assemblies. The values are based upon the maximum capability for individual misalignment.

If parallel, angular and axial misalignment are all required, be certain that the combined percentage of each does not exceed 100%. For instance, if 100% of the parallel misalignment rating is required, no angular or axial misalignment is allowed. If 50% of the parallel misalignment is required, only 50% of the angular misalignment OR 50% of the axial rating will be available.

Find the Product Number of the Flexible Coupling you are using in your application and take note of the misalignment values allowed.

Single Flexible Couplings

Product Number	Angular (Degrees)	Axial (In)	Parallel (In)
909980	1.5	0.065	0.011
910080	1.5	0.070	0.012
910180	1.5	0.080	0.013
910280	1.5	0.090	0.014
910380	1.5	0.105	0.017
910480	1.5	0.120	0.019
910580	1.5	0.135	0.022
911780	1.5	0.155	0.026

Double Flexible Couplings

Product Number	Angular (Degrees)	Axial (In)	Parallel (In)
909981	3.0	0.130	0.063
910081	3.0	0.140	0.078
910181	3.0	0.160	0.085
910281	3.0	0.180	0.091
910381	3.0	0.210	0.104
910481	3.0	0.240	0.117
910581	3.0	0.270	0.137
911781	3.0	0.310	0.170

Standard Key Sizes

Shaft Size (In) Min	Max	Key Size
.500	.562	.125 x .125
.625	.875	.187 x .187
.937	1.25	.250 x .250
1.312	1.375	.312 x .312
1.437	1.75	.375 x .375
1.812	2.25	.500 x .500

Shaft Size (In) Min	Max	Key Size
2.312	2.75	.625 x .625
2.812	3.25	.750 x .750
3.187	3.75	.875 x .875
3.812	4.50	1.00 x 1.00
4.562	5.50	1.25 x 1.25
5.562	6.50	1.50 x 1.50

Peak Input Rate

The Peak Input Rate Capacity is the limiting factor in high inertia starts and stops. It is the rate at which the clutch or brake absorbs heat (at friction interface) during the acceleration period, while the interfaces are slipping or until the load and the clutch are operating at the same speed. This heat will generally not or exceed the Peak Input Capacity unless the acceleration time exceeds clutch or brake transient time.

Transient time is the time required to reach the air pressure setting. The correct Input Rate occurs when the start-up time is greater than the response time of the clutch or the stopping time is greater than the response time of the brake. Increasing the response time (by using a control valve with a small orifice, or adding an air cavity between the valve and the unit) increases the start-up time. This reduces the thermal peaks that create damaging thermal gradients with the friction plate.

The Peak Input Rate during such a start is evaluated from an estimate of the speed difference between the facing and the friction disc at the end of the transient period and the torque value expected at the air pressure setting. The safe Peak Input Rate of a clutch or brake with cast iron plates and organic friction linings is approximately 0.9 horsepower per square inch of interface area.

Refer to the Function Example for High Inertia Starts or Stops on page 381
for a working example of this product selection consideration.

Calculating Peak Input Rate Capacity:

Calculate the speed change ($\hat{N}_1$) during the transient period. Assume 50% torque and a transient time of 0.1 second for most applications.

Formula: $$\hat{N}_1 = \frac{T\,(t)}{0.039\,(WK^2)}$$

T = rated clutch or brake torque
t = required transient time in seconds
WK^2 = total inertia load in pound-feet^2
$\hat{N}_1$ = speed change as measured in RPM

The speed difference (N_d) between the facing and friction disc at the end of the transient period is the difference between full speed (RPM) and the speed change ($\hat{N}_1$).

Formula: $$N_d = RPM - \hat{N}_1$$

N_d = speed difference in RPM
RPM = rating of the clutch or brake
$\hat{N}_1$ = speed change in RPM

Calculate the Peak Thermal Input in horsepower (HP) for your application.

Formula: $$HP = \frac{N_d\,(T)}{63000}$$

HP = peak thermal input of application
N_d = speed difference in RPM
T = torque at the set air pressure

Calculate the Peak Thermal Input of a clutch or brake.

Formula: $$P_{th} = Ia\,(0.9)$$

P_{th} = clutch or brake thermal input
Ia = effective interface area (see catalog table for product)

Compare your applications Peak Thermal Input requirement with that of the clutch or brake. If the clutch or brake has a higher Peak Thermal Input calculation than your applications requirement, you are using the correct product.

Sprocket Tables

The tables below indicate compatible Sprocket options for the applicable Clutch.

1. Find your specific Clutch Model Number.
2. Determine a Chain Size and minimum T Configuration from the table.

Refer to the Clutch drawing to obtain pilot diameter, bolt circle, hole size and location information. Some minimum sprockets may not provide sufficient load carrying capacity, due to the application. If in doubt, consult Nexen to insure suitability.

Friction Clutches

Chain Size	25	35	41/40	50	60	80	100
M							
BW	40 T	28 T	22 T				
F-450	48 T	32 T	25 T	21 T			
L-600		40 T	30 T	25 T	21 T		
M-800			38 T	31 T	26 T	21 T	
H-1000			45 T	37 T	31 T	24 T	20 T
XHW						35 T	27 T

Depending on the application, some of the minimum sprockets will not provide load carrying capacity.

Tooth Clutches

Chain Size	25	35	40	50	60	80	100	120	140	160	200
5H20		36 T	28 T	22 T	20 T						
5H30		40 T	32 T	26 T	22 T	17 T					
5H35		40 T	32 T	26 T	22 T	17 T					
5H40		45 T	34 T	28 T	24 T	18 T					
5H45			36 T	30 T	26 T	20 T					
5H50			40 T	34 T	28 T	22 T	19 T				
5H60				38 T	32 T	25 T	21 T	19 T			
5H70					38 T	29 T	24 T	21 T	19 T		
5H80						33 T	27 T	23 T	21 T	19 T	
5H100								30 T	25 T	23 T	19 T

Depending on the application, some of the minimum sprockets will not provide load carrying capacity.

Multi-Disc Clutches

Chain Size	25	35	40	50	60	80	100	120
4H30		36 T	28 T	24 T	20 T			
4H35		40 T	32 T	26 T	22 T	17 T		
4H40		45 T	34 T	28 T	24 T	19 T		
4H45			40 T	32 T	28 T	21 T		
4H50			42 T	34 T	29 T	23 T	19 T	
4H60				40 T	34 T	26 T	21 T	
4H70					38 T	30 T	24 T	21 T

Depending on the application, some of the minimum sprockets will not provide load carrying capacity.

Dual Plate Clutches

Chain Size	50	60	80	100	120	140	160	200
DPC-9T	34 T	28 T	22 T	19 T				
DPC-11T		33 T	25 T	21 T	19 T			
DPC-13T			33 T	27 T	23 T	21 T	19 T	
DPC-15T				29 T	25 T	21 T	20 T	19 T

Depending on the application, some of the minimum sprockets will not provide load carrying capacity.

Torque Limiters

Chain Size	25	35	40	50	60	80	100	120
TL10/15	45 T	30 T	24 T	20 T				
TL20		40 T	30 T	24 T	21 T			
TL30		42 T	32 T	26 T	22 T	18 T		
TL40			40 T	30 T	26 T	20 T		
TL50			42 T	34 T	29 T	23 T	19 T	
TL60			48 T	38 T	32 T	25 T	21 T	
TL70					37 T	29 T	23 T	21 T
TL80						33 T	27 T	23 T

Depending on the application, some of the minimum sprockets will not provide load carrying capacity.
This table applies to the TL/2 series also.

FUNCTION EXAMPLES

Product Function/Selection Chart

Functions	Disconnect	Holding	Reversing and Multiple Speed	Inching and Jogging	Accurate Positioning	Overload Protection	Controlled Acceleration (Soft Start)	Emergency Stopping	Cycling or Indexing	High Inertia Start or Stop	Tension Control, Rewind	Tension Control, Unwind
Products												
Friction Clutch Models												
BW,	Yes		Yes	Yes	Yes	Yes	Yes					
B-275,	Yes		Yes	Yes	Yes	Yes	Yes		Yes		Yes	
F-450, L-600, M-800	Yes		Yes	Yes	Yes	Yes	Yes		Yes		Yes	
H-1000, XHW,	Yes		Yes	Yes	Yes	Yes	Yes		Yes		Yes	
FW, LW, MW, HW	Yes		Yes	Yes	Yes	Yes	Yes		Yes		Yes	
TCC, STC	Yes		Yes	Yes	Yes	Yes	Yes		Yes		Yes	
DPC Series Dual Plate Clutches & Brakes	Yes		Yes	Yes	Yes	Yes	Yes		Yes	Yes	Yes	
4H Series Multi-Disc Clutches	Yes		Yes		Yes	Yes	Yes					
5H Series Tooth Clutches	Yes		Yes		Yes	Yes				Yes		
DFC & QFE Series High Capacity Clutches	Yes			Yes	Yes	Yes	Yes			Yes		
TL Series Torque Limiters	Yes				Yes	Yes						
Friction Brake Models												
S-450, S-600, S-800,		Yes							Yes			Yes
S-1000,		Yes							Yes			Yes
T-450, T-600, T-800,		Yes							Yes			Yes
T-1000		Yes							Yes			Yes
TCB, XTB, STB, BTB		Yes							Yes			Yes
Caliper Brakes Models												
DB,		Yes							Yes			
BC,		Yes						Yes	Yes			
BD,		Yes						Yes	Yes	Yes		
SPC		Yes						Yes	Yes	Yes		
Drum Brakes		Yes										
Spring Engaged Brake Models												
TSE, SE, MB, SSE		Yes						Yes				
DFB & QFB Series High Capcity Brakes		Yes						Yes	Yes	Yes		
Modular NEMA "C" Flange Clutch-Brake Models												
MBU, MOU, MDU, MIU				Yes		Yes	Yes		Yes			
Clutch-Brake Modular Units												
MBU, MOU, MDU, MIU				Yes		Yes	Yes		Yes			
Clutch-Brake Models												
FWCB, LWCB,				Yes		Yes	Yes		Yes			
MWCB, HWCB				Yes		Yes	Yes		Yes			
Clutch-Brake Flange Mounted Models												
FMC, FMCB,				Yes		Yes	Yes		Yes			
FMCBE, FMCBES				Yes		Yes	Yes		Yes			

In accordance with Nexen's established policy of constant product improvement, the specifications contained in this document are subject to change without notice. Technical data listed in this document are based on the latest information available at the time of printing and are also subject to change without notice. For current information, please consult:
www.nexengroup.com

FUNCTION EXAMPLES

This Section Contains: . . . . .Page

FUNCTION EXAMPLES
Product Function/Selection Chart 372
Disconnect 374
Holding 375
Reversing & Multiple Speed 376
Inching & Jogging 377
Accurate Positioning 378
Overload Protection 379
Controlled Acceleration (Soft Start) 380
Emergency Stopping 381
Cycling (or Indexing) 382
High Inertia Start or Stop 383
Tension Control (Rewind) 384
Tension Control (Unwind) 385

DISCONNECT:

A simple clutch function that produces remote, automatic, occasional disconnection of one operation from the rest of the machine — or one machine from another. A 5HP-SP single position clutch is often used where exact registration or timing is required.

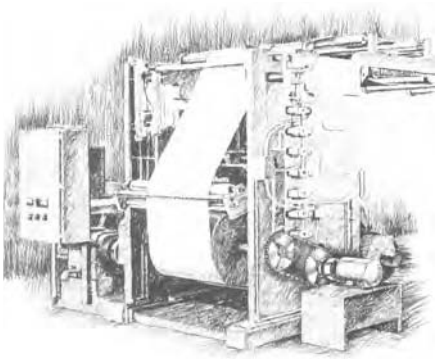

Selection Considerations:

Transmitted horsepower
Torque
RPM

Example

A clutch is required to disconnect the power of a 10 horsepower, 1750 RPM motor from the drive shaft of a printing press. Exact registry of the printing rolls is required when the clutch is engaged. The clutch is mounted on the driven shaft and is connected with a chain and sprockets at a speed ratio of 1:1.

This application is classified as an occasional start. Select a clutch based on the transmitted horsepower and RPM. Use a service factor of 2.

Torque Calculation:

$$\text{Torque} = \frac{63{,}000(HP)K}{RPM}$$

$$= \frac{63{,}000(10)2}{1750} = 720 \text{ in. lbs.}$$

Unit Selected:

A 5H30P-SP, Single Position Tooth Clutch Product Number **912100**.

Control Circuit

A cam switch, used for timing, energizes the clutch control circuit.

3-WAY CONTROL — N.C. — ENGAGES CLUTCH OR BRAKE WHEN ACTUATOR SWITCH IS CLOSED

"Air Champ" Product Considerations:

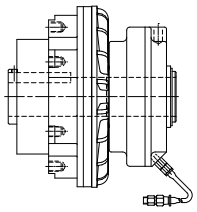

BW-XHW
F–450
L–600
M–800
H–1000

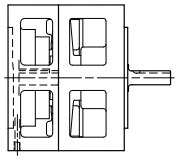

MODULAR CLUTCH
MDO625–1375

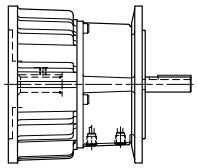

FMCE

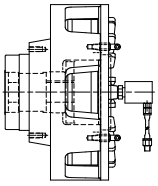

DPC
9T–15T

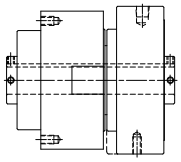

4H30P–4H70P
LSCC

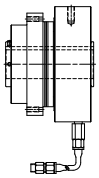

5H30–5H70
5H30P–5H80P
5H30SP–5H80SP

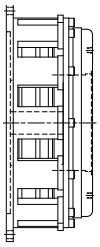

DFE
QFE
1150–2500

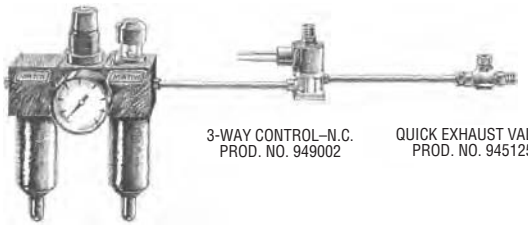

HOLDING:
A brake function to clamp (hold) a machine or mechanism in place. Often it's desirable to use a spring–engaged brake.

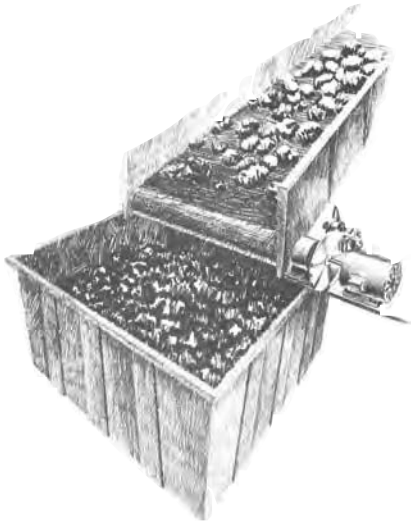

Selection Considerations:
Torque

Example

In the event of a power or air loss to the system, the spring set caliper brake engages and holds the incline conveyor at rest preventing it from "freewheeling" due to gravitational forces. This application is classified as an occasional stop.

Torque Calculation:

Measure the required torque directly using the torque lever method:

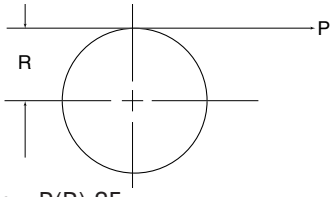

Torque = P(R) SF
Where:
P = Pounds of pull to turn the load
R = Radius of the conveyor drum in inches
SF = Service factor

Example

The measured pounds of pull it takes to start and keep turning the 12 inch radius drum is 500 pounds.

Torque = 500(12)2 = 12000 in. lbs

Unit Selected:

A Spring Actuated BD Caliper Brake,
Product Number **933500**
with an 18 1/4 inch diameter disc,
Product Number **934200.**

Control Circuit

The brake is activated when the switch on the control panel is moved to the off position allowing air to be removed from the spring hold–off air canister.

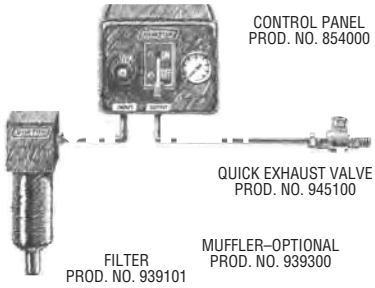

"Air Champ" Product Considerations:

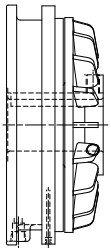

S, T, TSE 450-1400

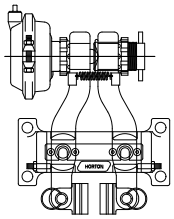

CALIPER BRAKES DB, BC, BD, VC500 & SPC

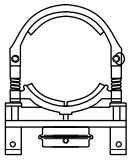

DIAPHRAGM BRAKES J, K, 4K, 8K,& 12K

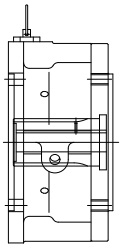

SE BRAKES 100–1000

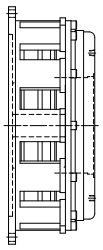

DFB, QFB 1150–2500

REVERSING AND MULTIPLE SPEED:

Multiple clutches can change speed and/or direction — providing a reduced load on the motor and starter (the motor never stops), faster changes and higher cycling capabilities.

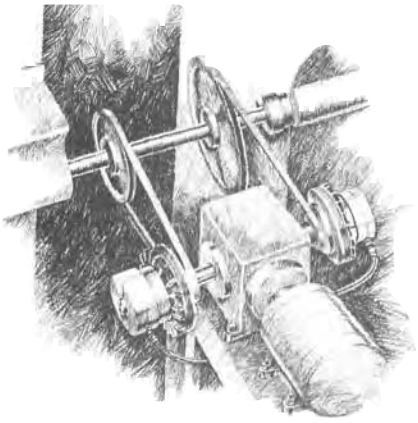

Selection Considerations:

Transmitted horsepower
Torque
RPM

Example

Two clutches are used a reversing drive. By alternating engagement from one clutch to the other, the line shaft reverses direction. Because the sprocket diameters vary from drive A to B, the speed of the drive changes each time it reverses direction. The clutches are mounted on the output shafts of a bevel gear box which are rotating at 383 RPM. The gear box is driven by a 1/2 horsepower motor.

Torque Calculation:

Torque =

$$\frac{63000(HP)K}{RPM} = \frac{63000(.5)2}{383} = 165 \text{ in. lbs}$$

Unit Selected:

Two L-600, Pilot Mount clutches, Product Number **805270**.

Control Circuit

Each clutch is cycled six times per minute. For this reason, a double solenoid, 4-way spool valve is selected.

The double solenoid feature provides quick response in both spool shift directions.

4-WAY DOUBLE SOLENOID SPOOL CONTROL INTERNALLY OPERATED FOR CLUTCH AND BRAKE OPERATING FROM 30 TO 100 PSI

"Air Champ" Product Considerations:

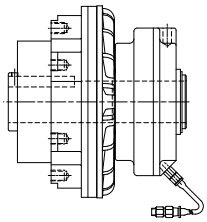

BW-XHW
F–450
L–600
M–800
H–1000

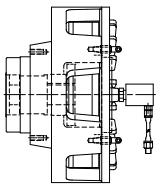

DPC
9T–15T

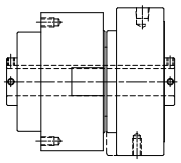

4H30P–4H70P
LSCC

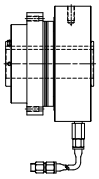

5H30P–5H80P

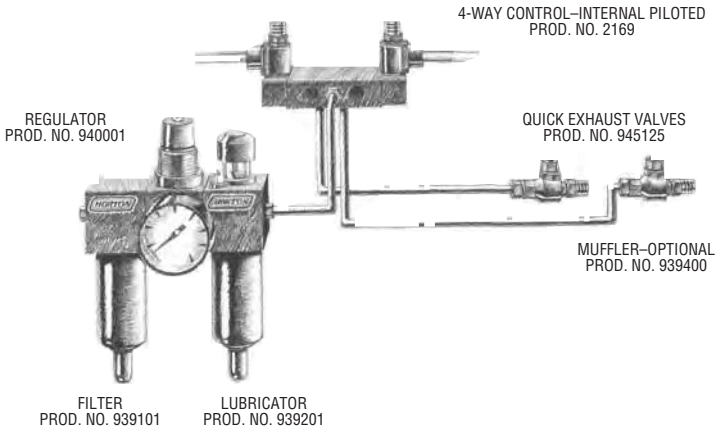

INCHING AND JOGGING:

To position, set-up, thread or check out a machine. This motion is usually sudden and uncontrollable; hard on motors and starters.

A clutch or clutch/brake provides gentle inch/jog function that is independent of the drive motor.

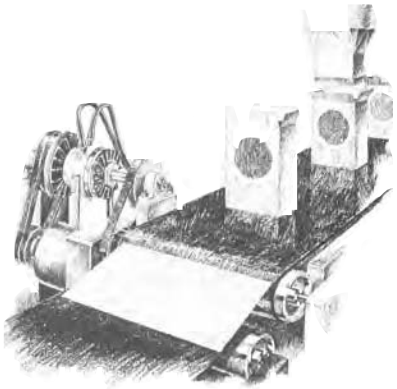

"Air Champ" Product Considerations:

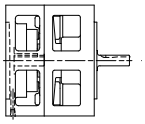

MODULAR CLUTCHES & CLUTCH BRAKES 625–1375

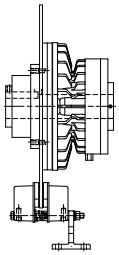

FWCDB–HWCDB

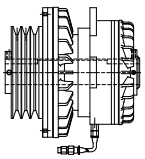

FCB-450, LCB-600, MCB-800 BWCB–HWCB

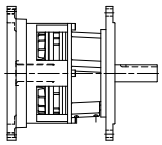

FMCB–130–19 AND 24 FMCB–7–28 AND 38 FMCB–8–38 AND 42

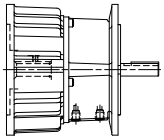

FMCBE 625, 875, 1125, 1375

Selection Considerations:

Linear inertia
Rotational inertia
Transmitted horsepower
RPM
Torque
Cycle rate
Continuous thermal horsepower rating

Example

A clutch-brake is placed in the drive system to position boxes, carried on a conveyor, under a hopper which fills the boxes with a product. A box is positioned under the hopper every second. This application is classified as a cyclic start-stop.

Conveyor Reflected Inertia:

$$WK^2_r = W\left(\frac{V}{2\pi N}\right)^2$$

$$= 120\left(\frac{189}{2\pi 180}\right)^2 = 3.35 \text{ lb. ft}^2$$

Where:
W =120 lbs. (Conveyor load including belt)
V =189 FPM
N =180 RPM at the clutch brake

Drum And Pulley Reflected Inertia:

$$WK^2_r = WK^2\left(\frac{N_1}{N_{cb}}\right)^2$$

$$= 25\left(\frac{60}{180}\right)^2 = 2.78 \text{ lb. ft}^2$$

Where: $WK^2 = 25$ lb.ft^2
N_1 = Speed of the load
N_{CB} = Speed at the clutch brake

Inertia of the pulley, shaft and clutch-brake = .87 lb. ft^2

Total inertia =
3.35 + 2.78 + .87 = 7 lb. ft^2

Torque Calculation:

$$T = \frac{.039(WK^2)RPM}{t} = \frac{.039\ (7)180}{1} = 49 \text{ in. lbs.}$$

Where:
WK2 = Total inertia in lb. ft^2
RPM = Speed at the clutch-brake
t = Time in seconds
T = Torque in inch pounds

Unit Selected:

An FWCB Clutch-Brake-Sheave with a 3.35 O.D. sheave, Product Number **826700**.

Thermal Characteristics:

Check the continuous thermal horsepower (HPt) requirement based on the Total Inertia, RPM and cycle rate.

Energy Per Cycle:

$$E_c = .00017(WK^2))(RPM^2) =$$
$$.00017(7)(180^2) = 38.56 \text{ ft. lbs.}$$

Where: E_c = Energy per cycle in ft. lbs.
WK^2 = Total inertia
RPM = Speed at the clutch-brake

Thermal Horsepower Dissipation Requirement:

$$HP_T = \frac{E_c(CPM)}{33000} =$$

$$\frac{38.56(60)}{33000} = .07 \text{ horsepower}$$

Where:
HP_T = Thermal horsepower requirement
E_C = Energy per cycle
CPM = Cycles per minute

From the Thermal Horsepower vs. RPM graphs the FWCB will dissipate .07 horsepower at 180 RPM.

Control Circuit

A 4-way, double solenoid (with quick exhaust valves), control circuit is used because of the rapid cycle rate.

4-WAY DOUBLE SOLENOID SPOOL CONTROL INTERNALLY PILOTED FOR CLUTCH AND BRAKE OPERATING ABOVE 30 CPM — FROM 30 TO 100 PSI.

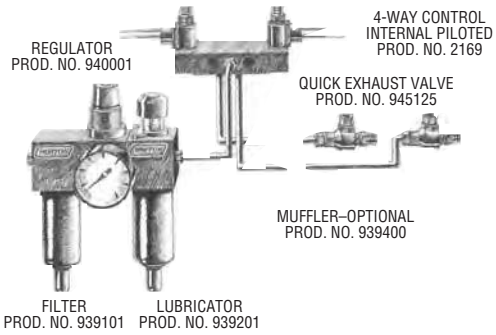

FUNCTION EXAMPLES

ACCURATE POSITIONING:

A brake or clutch/brake provides very precise and repeatable stopping.

Tight tolerances are held in cut-to-length systems, filling operations, and machining cycles, with limit switches, photo electric cells or proximity switches accurately sense position.

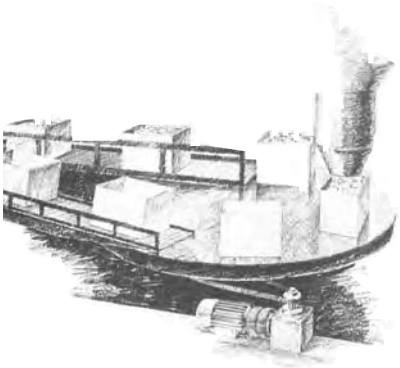

Selection Considerations:

Transmitted horsepower
RPM
Torque

Example

A clutch-brake is necessary to accurately position a turntable carrying bins which rotate under a feeder head. The feeder head dumps a predetermined amount of material into the bins at regular, timed intervals.

The motor is a 5 horsepower, 1800 RPM, 184TC frame.

Unit Selected:

A modular MDB-1125 based on the motor frame size only. THe MDB-1125 consists of an MBU=1125, Product Number 935200 and an MDU-1125, Product Number 935100.

Control Circuit

A proximity switch energizes the 4-way clutch-brake control circuit.

4-WAY SINGLE SOLENOID SPOOL CONTROL INTERNAL PILOTED — N.C. FOR OPERATING CLUTCH AND BRAKE AT PRESSURES 50 TO 100 PSI.

"Air Champ" Product Considerations:

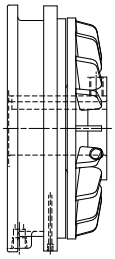

S, T, TSE 450–1400

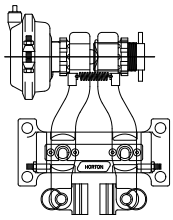

CALIPER BRAKES DB, BC, BD, VC500, SPC

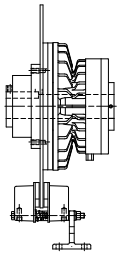

FCDB–HCDB

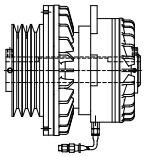

BWCB–HWCB

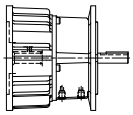

FMCBE 625, 875, 1125, 1375

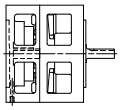

MODULAR CLUTCH/BRAKES MDB625–1375

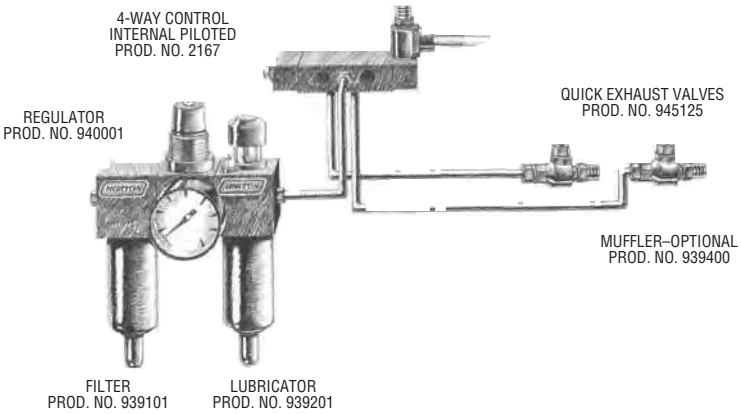

OVERLOAD PROTECTION:

Protects expensive machinery or products from jam-ups and overloading.

Air clutches excel at this function because (1) torque level is easily and accurately set by air pressure, and (2) torque to start the load (often two to three times the desired protective torque) is compensated for a dual pressure control circuit.

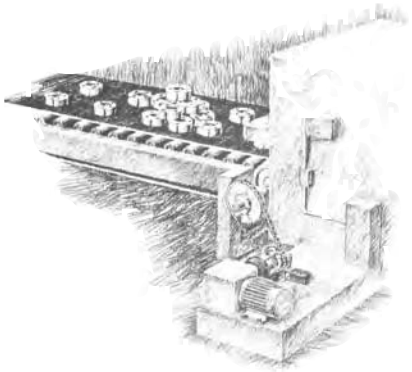

Selection Considerations:

Transmitted horsepower
RPM at the clutch
Torque

Example

A device is required to provide overload protection for the drive components which include a 1/2 horsepower, 900 RPM motor and a 100:1 reducer. This drive is powering a continually running conveyor which is feeding parts onto a heat treating oven.

The unit is mounted on the reducer output shaft which rotates at 9 RPM.

This application is classified as an occasional start. Select a Torque Limiter based on the transmitted horsepower and RPM.

$$\text{Torque} = \frac{63000(.5)}{9} = 3500 \text{ in. lbs.}$$

Unit Selected:

A TL40-A, Torque Limiter,
Product Number **801522.**

Control Circuit

A dual pressure circuit is used to provide 65 PSI for starting the conveyor and 30 PSI running pressure. See diagram page 111.

If and overload occurs, the Torque Limiter Interfaces separate, moving the cylinder to the outer position. This movement is detected by the limit Switch, which de-energizes the 3-way Air Inlet Mount Solenoid Valve, thus exhausting air to the Torque Limiter. Internal springs provide assistance for total Torque Limiter release.

All of the drive components down to the motor are protected from an overload.

"Air Champ" Product Considerations:

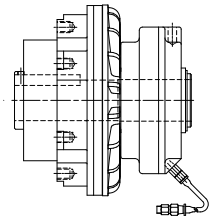

BW–XHW
F–450
L–600
M–800
H–1000

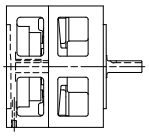

MODULAR CLUTCH
MDO625–1375

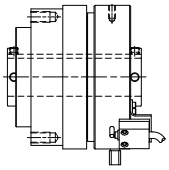

TORQUE LIMITER

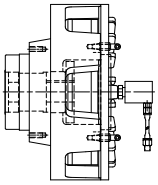

DPC
9T–15T

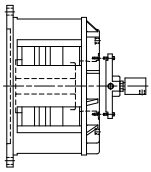

DFE, QFE
1150–2500

FUNCTION EXAMPLES

CONTROLLED ACCELERATION ("SOFT START"):

A clutch function that gently accelerates delicate loads or starts very heavy loads — eliminating shock from "across-the-line" starts.

A clutch reduces the load on the motor by letting it run continuously (often permitting use of smaller drive motors). Completely adjustable — from fast engagement to slow gradual acceleration.

Control is achieved by control of air pressure or air flow — or both.

An air brake is used for controlled deceleration.

SELECTION CONSIDERATIONS:

Transmitted horsepower
RPM
Torque

EXAMPLE

A clutch is needed to drive a bottle conveyor. A "soft start" is required to prevent the bottles from tipping and jamming on the conveyor. The clutch is mounted on a 7 1/2 horsepower, 1750 RPM motor.

$$\text{Torque} = \frac{63000(HP)K}{RPM}$$

$$= \frac{63000(7.5)2}{1750} = 540 \text{ in. lbs.}$$

UNIT SELECTED:

An M-800 from the torque charts or from the Transmitted Horsepower vs. Speed chart on page 363.
Product Number **807650.**

CONTROL CIRCUIT

The control circuit includes a Flow Control valve which causes the air pressure to the clutch to build up slowly, giving a soft start every time.

"AIR CHAMP" PRODUCT CONSIDERATIONS:

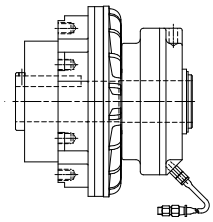

BW–XHW
F–450
L–600
M–800
H–1000
LSCC

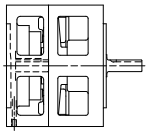

MODULAR CLUTCH
MDO625–1375

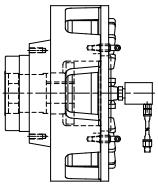

DPC
9T–15T

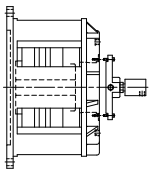

DFE, QFE
1150–2500

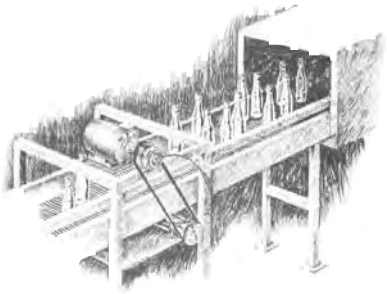

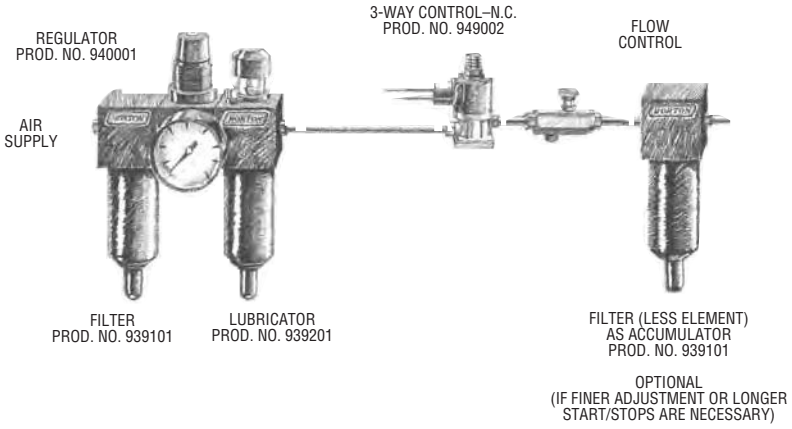

EMERGENCY STOPPING:
A brake (usually spring-engaged) used to instantly stop a machine in the event of a jam, malfunction, tripped safety or power loss — typically where operator safety, or vertical motion is involved.

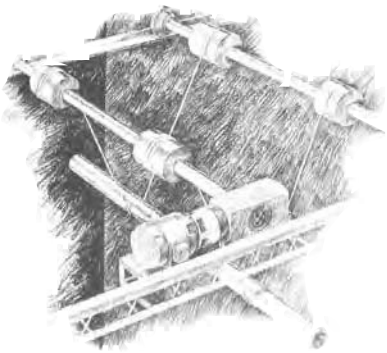

Selection Considerations:
Transmitted horsepower
RPM
Torque

Example
A clutch-brake is required on a drive which is used to lift heavy pipe. The pipe is to be lifted across wire ropes and the clutch is engaged to lift it. A spring-engaged brake is required to prevent the pipe from falling in the event of a power or air pressure loss.

The motor is a 3/4 horsepower, 1750 RPM, 56C frame.

Unit Selected:
A FMCBES-625,
Product Number **801623.**

Selection is based on the motor frame size only. The FMCBES-625 is an air engaged clutch combined with a spring engaged brake.

Control Circuit
Controlled by a single 3-way valve. One air supply operates the combined clutch-brake.

The clutch begins to deliver torque at approximately 40 PSI. Below 30 PSI, the spring force of the brake overcomes the air cylinder thrust keeping the brake engaged.

3-WAY CONTROL — N.C. — ENGAGES CLUTCH OR BRAKE WHEN THE ACTUATOR SWITCH IS CLOSED.

"Air Champ" Product Considerations:

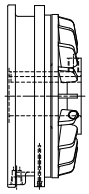

TSE
450–1400

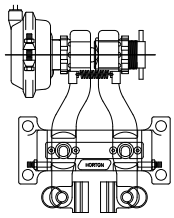

CALIPER BRAKES
BC, BD, VC500, SPC

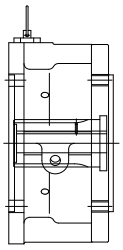

SE BRAKES
100–1000

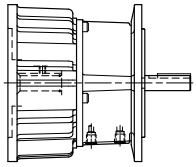

FMCBES
625, 875, 1125, 1375

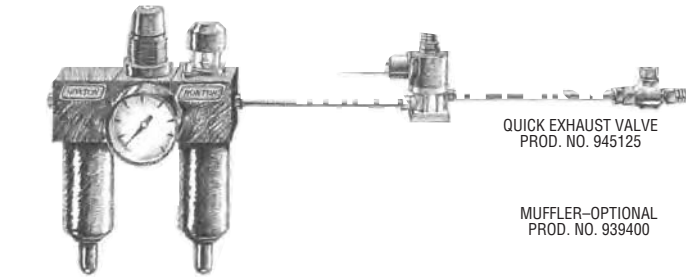

CYCLING (OR INDEXING):

Continual starting and stopping is very hard on motors and starters, Motors must then be oversized and even then, they have limited cycling capability.

A clutch/brake reduces the load by letting the motor run continuously, permitting much faster cycling rates ... (often more than 100 times per minute) with only fractional power.

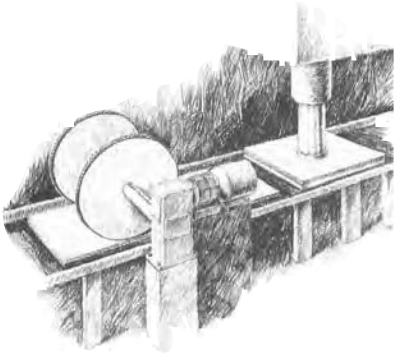

"Air Champ" Product Considerations:

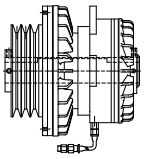

BWCB–HWCB

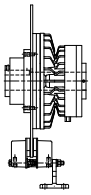

FCDB–HCDB

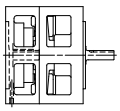

MODULAR CLUTCH/BRAKES MDB625–1375

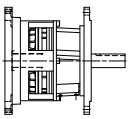

FMCB–130–19 AND 24
FMCB–7–28 AND 38
FMCB–8–38 AND 42

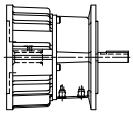

FMCBE AND FMCBES
625, 875, 1125,1375

Selection Considerations:

Rotational inertia
Cycle rate
Transmitted horsepower
RPM
Torque
Continuous Thermal Horsepower Rating

Example

Select a clutch-brake for a drive in a machine that die cuts paper board into cartons. The clutch is used to drive rolls that feed lengths of paper board to the die cutting head at rates up to 46 times per minute. The brake stops the feed rolls every cycle.

Unit Selected:

The drive consists of a 1 horsepower, 1800 RPM motor going into a 10:1 worm gear reducer. A Modular clutch-brake, MDB-625, is selected from the NEMA Frame Selection chart in the catalog.

MBU-625 Product Number **928500**
MDU-625 Product Number **928600**

This application is classified as a cycle start-stop and requires an evaluation of the continuous thermal dissipation capacity.

Rotational Inertia:

The value of WK^2 of the two 15 inch diameter, one inch wide feed rolls is taken from the Inertial of Steel Discs and Shafts chart on page 361.

$$Wk^2 = 9.75 \times 2 = 19.5 \text{ lb. ft}^2$$

Reflected Inertia (WK^2_r):

$$WK^2_r = WK^2 \left(\frac{N_1}{N_{cb}}\right)^2 =$$

$$19.5 \left(\frac{180}{1800}\right)^2 = .195$$

Where:
WK_2 =Feed roll inertia
N_1 =Speed of the load
N_{cb} =Speed of the clutch-brake

Thermal Characteristics:

Calculate the continuous thermal horsepower (HP_T) requirement based on the reflected inertia, speed at the clutch-brake and the cycle rate.

Energy Per Cycle:

$$E_c = .00017(WK^2)(RPM)^2 =$$

$$.00017(.195)(1800)^2 = 107.4 \text{ ft. lb.}$$

Where: E_c = Energy per cycle in ft. lbs.
WK^2 = Reflected inertia
RPM = Speed at the clutch-brake

Thermal Horsepower Requirements:

$$HP_T = \frac{E_c(CPM)}{33{,}000} = \frac{107.4\ (46)}{33{,}000} = .16$$

Where:
HP_T = Thermal horsepower dissipation requirement
E_c = Energy per cycle
CPM = Cycles per minute

Refer to the Thermal Capacity of Modular Units on page 249.

An MDB-625 dissipates .40 thermal horsepower continuously at 1800 RPM.

Control Circuit

This application utilizes two 3-way normally closed valves.

One valve is used to cycle the clutch for the feed operation. The other 3-way valve is energized to apply the brake.

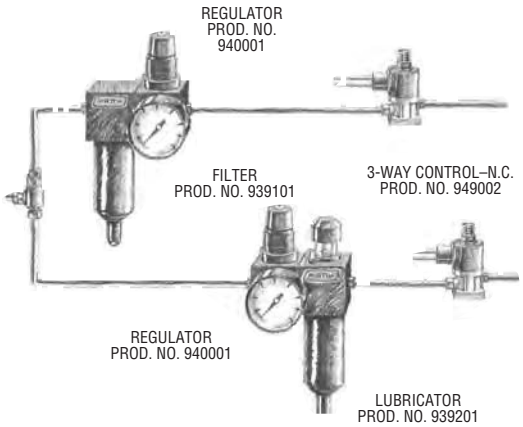

HIGH INERTIA START OR STOP:

A clutch or brake used to start or stop heavy, rotating drums, rolls or flywheels in a specific length of time.

Units selected should have sufficient heat sink capacity to absorb the energy produced in each start or stop.

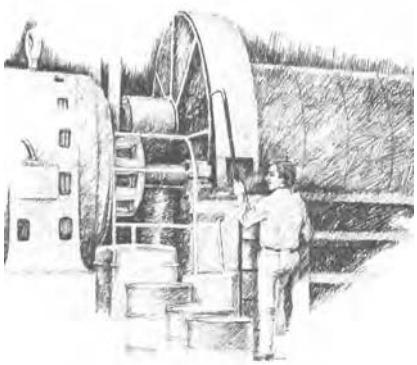

"AIR CHAMP" PRODUCT CONSIDERATIONS:

Starts:

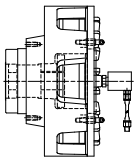

DPC 9T–15T

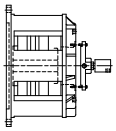

DFE, QFE 1150–2500

Stops:

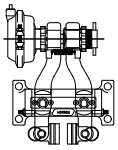

CALIPER BRAKES BD, VC500, SPC

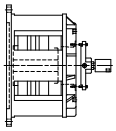

DFE, QFE 1150–2500

SELECTION CONSIDERATIONS:

Rotational inertia
Torque
Heat sink capacity
Peak input rate capacity*

**The peak input rate capacity may be the limiting factor in high inertia starts or stops even though the Heat Sink Capacity is sufficient. The peak input rate capacity is the rate at which a clutch or brake absorbs heat at the friction interface. The generation of heat results from slip at the interfaces during an acceleration period. This heat generally will not reach or exceed the Peak Input Capacity unless the acceleration time exceeds clutch or brake transient time (time to reach the air pressure setting).*

Problems only occur when the start-up time is greater than the response time of the clutch or brake. The peak input generation rate during such a start is evaluated from an estimate of the speed difference between the facing and the friction disc at the the end of the transient period and the torque value expected at the air pressure setting.

The safe Peak Input Rate Capacity of a clutch or brake with cast iron plates and organic friction linings is approximately .9 horsepower per square inch of interface area.

EXAMPLE

Select a clutch to bring a roll with an inertia load (WK^2) of 1800 lb. ft^2 from stop to 490 RPM within 2 seconds. The selected clutch must have a Heat Sink Capacity which exceeds the energy in ft. lbs. produced at each start.

TORQUE:

$$T = \frac{.039\ (WK^2)\ RPM}{t} = \frac{.039\ (1800)\ 490)}{2} = 17{,}199 \text{ in. lbs.}$$

Where; T = Torque in inch pounds
WK^2 = Inertia load in lb ft^2
RPM = Speed at the clutch
t = Time in seconds

With a service factor of 1.5 the required torque is:

T = 1.5 x 17,199 = 25,799 in. lbs.

ENERGY PER CYCLE:

$$Ec = .00017\ (WK^2)(\Delta RPM)^2 =$$
$$.00017\ (1800)\ (490)^2 = 73{,}470 \text{ ft. lbs.}$$

Where: E_c = Energy absorbed each start in ft. lbs.
WK^2 = Inertia load in lb. ft^2
RPM = Speed at the clutch

UNIT SELECTED:

A DFE 1650-S, Product Number **964003**.
Torque capacity = 27,000 in. lbs. at 60 PSI.
Heat Sink capacity = 870,000 ft. lbs.

PEAK INPUT RATE CAPACITY:

Calculate the speed change (ΔN_1) during the transient period. (Assume 50% torque and a transient time of .1 second.)

$$\Delta N_1 = \frac{T\ (t)}{.039\ (WK^2)} = \frac{13500\ (.1)}{.039\ (1800)} = 19 \text{ RPM}$$

The speed difference (N_d) between the facing and friction disc at the end of the transient period is the difference between full speed (RPM) and the speed change (ΔN1).

$$N_d = RPM - N_1 = 490 - 19 = 471 \text{ RPM}$$

The peak thermal input in HP is calculated from the formula:

$$HP = \frac{N_d(T)}{63000} = \frac{471\ (27000)}{63000} = 202 \text{ HP}$$

Where: T = Torque at the set air pressure

The effective interface area of a DFE 1650-S is 227 square inches. (Data from the catalog tables.)

The DFE 1650-S peak input capacity is:
227 x .9 = 204 HP

The DFE 1650-S has sufficient capacity to absorb the heat generated during the acceleration period. If the peak thermal input had exceeded the peak input capacity, the start time (t) would have to increase.

Increasing the response time, by using a control valve with a small orifice, or adding an air cavity between the control valve and the clutch, increases the transient time. This reduces the thermal peaks that create damaging thermal gradients within the friction plates.

CONTROL CIRCUIT:

A 3-way valve control circuit is used to affect a relatively slow start.

3–WAY CONTROL–N.C.–ENGAGES CLUTCH OR BRAKE WHEN ACTUATOR SWITCH IS CLOSED.

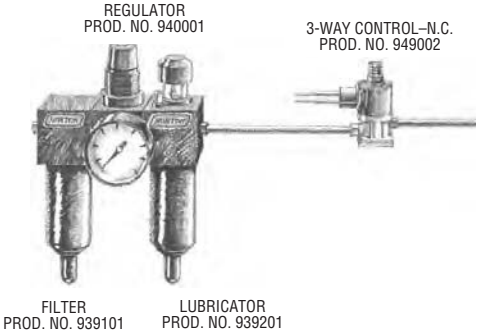

TENSION CONTROL (REWIND):

A clutch is used on rewind stands to apply constant force (or tension) to a web of paper, film, wire or other material. The clutch must be able to handle required torque in addition to dissipating required thermal horsepower at the belted speed of the clutch.

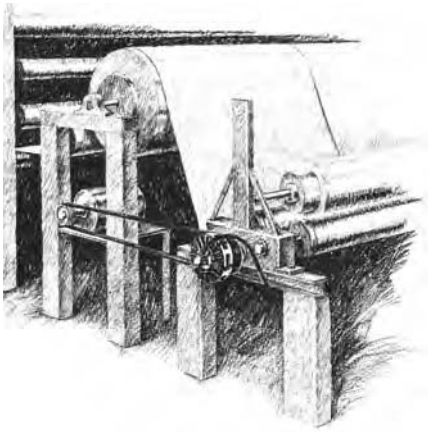

"Air Champ" Product Considerations:

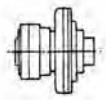

FW-XHW
F-450
L-600
M-800
H-1000

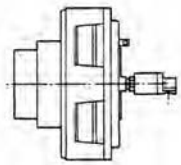

DPC
9T–15T

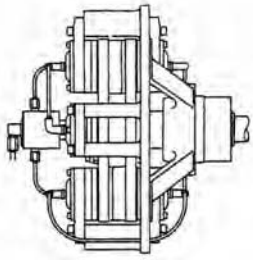

TCC
10, 14 & 20

Selection Considerations:

Maximum roll diameter in inches
Minimum roll diameter in inches
Web speed in FPM
Web width in inches
Maximum rewinder horsepower
Web tension in pounds per inch of web width

Example

Size a clutch for a rewind stand which has a paper roll 25 inches in diameter; a core size of 4 inches in diameter. The line speed is 200 feet per minute. The web width is 48 inches and the desired web tension is 1.5 pounds per inch of web width.

The usual practice in rewinding applications is to belt the clutch with a 5% lead (that is, 5% faster than the sheet speed) to take up the slack at the start of winding.

Belted speed (RPM)

$$= \frac{\text{Web Speed (12) (1.05)}}{\text{Min Core Dia } (\pi)}$$

$$= \frac{200\ (12)\ 1.05}{4\ (\pi)} = 200 \text{ RPM}$$

There are several ways to determine the maximum HP to be dissipated by the clutch. First, the web tension must be known or assumed. Then, it is most convenient to determine the clutch HP output required (total HP), and the clutch HP input at the finish of winding (web HP), while maintaining the above required HP output. The difference between the two is the HP to be dissipated by the clutch at the finish of winding.

$$\text{Web HP} = \frac{\text{(Max Web Tension) (Web Width) (Web Speed)}}{33{,}000}$$

$$= \frac{1.5\ (48)\ 200}{33{,}000} = .44\text{HP}$$

$$\text{Total HP Requirement} = \frac{\text{(Web HP) (Max Roll Dia) (1.05)}}{\text{Min Roll Dia}}$$

$$= \frac{.44\ (25)\ 1.05}{4} = 2.89 \text{ HP}$$

HP to be dissipated = Total HP Requirement – Web HP = 2.89 – .44 = 2.45

The torque capacity of Nexen Clutches is usually greater than required to most centerwind applications. However, torque shoud be checked.

Torque = (½ Max Web Tension) (Roll Dia) (Web Width in inches) =

$$= \frac{1.5\ (25)\ 48}{2} = 900 \text{ in. lbs.}$$

Select a clutch, from the Thermal horsepower vs. RPM graphs, that dissipates 2.45 horsepower at 200 RPM.

Unit Selected:

A TCC-20 Clutch
Refer to pages 70-74

Control Circuit:

Nexen has a complete electronic Tension Control System which automatically senses tension in a web and compares it to a set desired tension level. When the web tension is more or less than the desired level, the automatic Tension Control System adjusts the air pressure to the clutch to maintain the set tension level.

TENSION CONTROL (UNWIND):

A brake is used on unwind stands to apply constant force (or tension) to a web of paper, film, wire or other material.

Tension is determined by air pressure. Because of the continuous slip operation, brakes are generally sized on thermal characteristics rather than torque.

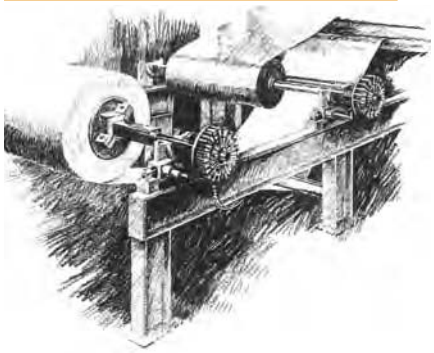

"Air Champ" Product Considerations:

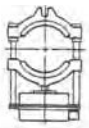

DIAPHRAGM BRAKES
J, K, 4K, 8K, & 12K

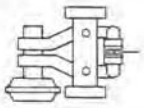

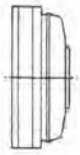

CALIPER BRAKES
DB, BC, BD, VC500 & SPC

SA & TA
450-1000

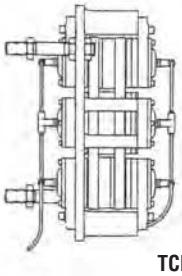

TCB-7,
XTB-10, 12, 14, 18, 22
XTBA-10, 12, 14, 18, 22

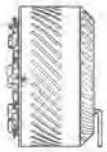

BTBA-10, 12

Selection Considerations:

Maximum roll diameter in inches
Minimum roll diameter in inches
Web speed in FPM
Web width in inches
Web tension in pounds per inch of web width

Example

Size a brake for an unwind stand which has a paper roll 24 inches in diameter; a core size of 3 inches in diameter.

The line speed is 500 feet per minute. The web width is 30 inches wide and the desired web tension is 1.5 pounds per inch of web width.

Web Tension = Web Width x Tension
= 30 in x 1.5 lbs/in = 45 lbs

$$\text{Maximum Brake HP} = \frac{\text{Web Tension x Web Speed}}{33000} = \frac{\text{45 lbs x 500 FPM}}{\text{33,000 ft-lbs/Min/HP}}$$

Max Torque = Web Tension x Max Roll Radius = 45 lbs x 12 in = 540 in lb Max

Min Torque = Web Tension x Min Roll Radius = 45 lbs x 1.5 = 68 in lb Min

$$\text{Max RPM} = \frac{\text{Web Speed x 12}}{\text{Min Core Dia x } \pi} = \frac{\text{500 FPM x 12}}{3 \text{ x } \pi} = \text{636 RPM Max}$$

$$\text{Min RPM} = \frac{\text{Web Speed x 12}}{\text{Max Core Dia x } \pi} = \frac{\text{500 FPM x 12}}{24 \text{ x } \pi} = \text{80 RPM Min}$$

NOTE: Effective cooling speed = $RPM_{EFF} = RPM_{MIN} + \frac{(RPM_{MAX} - RPM_{MIN})}{3}$

$$= 80 \text{ RPM} + \frac{(636 \text{ RPM} - 80 \text{ RPM})}{3} = 265 \text{ RPM}$$

Select a brake from the Thermal horsepower vs. RPM graphs, that dissipates .7 horsepower at the effective cooling speed of 265 RPM.

Unit Selected:

A XCB-10 Brake with two calipers and .35 coefficient of friction facings. Refer to pages 206-207.

Control Circuit:

Nexen has a complete electronic Tension Control System which automatically senses tension in a web and compares it to a set desired tension level. When the web tension is more or less than the desired level, the automatic Tension Control System adjusts the air pressure to the brake which maintains the set tension level.